Council of the
European Union

**Brussels, 14 June 2024**
**(OR. en)**

**11205/24**

**Interinstitutional File:**
**2023/0124(COD)**

**MI 611**
**ENT 120**
**ENV 654**
**CHIMIE 47**
**IND 318**
**CONSOM 222**
**SAN 377**
**CODEC 1539**

**OUTCOME OF PROCEEDINGS**

| | |
|---|---|
| From: | General Secretariat of the Council |
| To: | Delegations |
| No. prev. doc.: | 10740/24 |
| No. Cion doc.: | 8904/23 + ADD1-7 |
| Subject: | Proposal for a Regulation of the European Parliament and of the Council on detergents and surfactants, amending Regulation (EU) 2019/1020 and repealing Regulation (EC) No 648/2004<br>- Mandate for negotiations with the European Parliament |

Delegations will find attached the text of the mandate for negotiations with the European Parliament as endorsed by the COREPER at its meeting on 14 June 2024.

**ANNEX**

2023/0124 (COD)

Proposal for a

**REGULATION OF THE EUROPEAN PARLIAMENT AND OF THE COUNCIL**

**on detergents and surfactants~~, amending Regulation (EU) 2019/1020~~ and repealing Regulation (EC) No 648/2004**

(Text with EEA relevance)

THE EUROPEAN PARLIAMENT AND THE COUNCIL OF THE EUROPEAN UNION,

Having regard to the Treaty on the Functioning of the European Union, and in particular Article 114 thereof,

Having regard to the proposal from the European Commission,

After transmission of the draft legislative act to the national parliaments,

Having regard to the opinion of the European Economic and Social Committee[1],

Acting in accordance with the ordinary legislative procedure,

[1] OJ C , , p. .

Whereas:

(1) The conditions for placing and making available on the market of detergents and surfactants for detergents have been harmonised through Regulation (EC) No 648/2004 of the European Parliament and of the Council[2]**. The harmonised requirements of that Regulation are related to the particular conditions of use and the disposal of detergents with wastewater, including:**

- **the biodegradability of surfactants in detergents;**
- **restrictions or bans on surfactants on grounds of biodegradability;**
- **the additional labelling of detergents, including fragrance allergens;**
- **the information that manufacturers must hold at the disposal of the Member States' competent authorities and medical personnel;**
- **and limitations on the content of phosphates and other phosphorus compounds in consumer laundry detergents and consumer automatic dishwasher detergents.**

(2) The Commission evaluation of Regulation (EC) No 648/2004 concluded that overall that Regulation has achieved its objectives to a large extent. However, the evaluation also identified a number of weaknesses and areas for further improvement. In recent years, the regulatory framework for chemicals has changed radically creating a lack of coherence and duplications in the rules applicable to detergents and notably their information requirements. There is therefore a need to ensure consistency and to eliminate the duplicated information requirements.

[2] Regulation (EC) No 648/2004 of the European Parliament and of the Council of 31 March 2004 on detergents (OJ L 104, 8.4.2004, p. 1).

(3) New market developments, in particular the development of detergents containing micro-organisms and the refill sale of detergents have emerged that are either completely or partially not covered by Regulation (EC) No 648/2004**. Regarding online sales, several surveys show that the number of products offered for sale via the Internet is increasing and this type of sale poses particular enforcement issues where there is no responsible economic operator established in the Union**. **Refill should be encouraged as a specific waste prevention measure that counts towards and is necessary for meeting re-use and refill targets, in line with the Green Deal and the new Circular Economy Action Plan (CEAP).** On the other hand, digitalisation offers opportunities for simplification, burden reduction and increased ease of use and understandability of safety and use information that are currently missed. It is therefore necessary to take account of the newly emerged products and practices and step up the digitalisation efforts in line with the overarching objectives of the Union especially in terms of sustainability, green and digital transition.

(4) The Fitness Check of the most relevant chemicals legislation (excluding Regulation (EC) No 1907/2006 of the European Parliament and of the Council[3]) highlighted the complexity of the Union regulatory framework for chemicals and attributed it to the large number of product and sector specific pieces of legislation with embedded links with each other. **It pointed out that enforcement issues are reported by market surveillance authorities concerning products entering the Union from third countries through online sales.** It also pointed out that there is room for simplification in the communication of information of overcrowded labels to product users, and found that the use of innovative tools for communicating product information is currently not being taken advantage of. It is, therefore, necessary that the current rules are simplified to reduce burden for economic operators, improve consumer understanding and facilitate market surveillance. Regulation (EC) No 648/2004 should therefore be replaced.

[3] Regulation (EC) No 1907/2006 of the European Parliament and of the Council of 18 December 2006 concerning the Registration, Evaluation, Authorisation and Restriction of Chemicals (REACH), establishing a European Chemicals Agency, amending Directive 1999/45/EC and repealing Council Regulation (EEC) No 793/93 and Commission Regulation (EC) No 1488/94 as well as Council Directive 76/769/EEC and Commission Directives 91/155/EEC, 93/67/EEC, 93/105/EC and 2000/21/EC (OJ L 396, 30.12.2006, p. 1).

(5) Decision No 768/2008/EC of the European Parliament and of the Council lays down common principles and reference provisions intended to apply across sectoral legislation in order to provide a coherent basis for a revision of that legislation. The new legal framework for detergents and surfactants should be aligned to the extent possible to those common principles and reference provisions.

(6) In order to ensure legal certainty and a level playing field for economic operators, the definition of detergent should cover all products falling in the scope of harmonisation, including the newly developed detergents containing ~~intentionally~~ added micro-organisms. **In addition, the word "added" as used in this Regulation should cover any addition of an ingredient by any actor in the manufacturing chain of a detergent or surfactant whereas impurities should not be considered as added.** ~~The definition should also cover products for cleaning the surface of fruits and vegetables.~~

(7) Since surfactants are primarily sold in business-to-business transactions in order to be used in the manufacturing of detergents, they do not need to be subject to the same requirements as detergents. Therefore, minimum rules for surfactants should be laid down, namely rules on ~~ultimate~~ biodegradability, a minimum set of labelling information and the obligation of economic operators to draw up a technical documentation and to create a **digital** product passport. **Because surfactants are sometimes sold directly to consumers in refill format, this Regulation's provisions on refill sales should also apply to surfactants.**

(8) **The European Green Deal, as set out in the Commission communication of 11 December 2019, has set a goal to protect better human health and the environment as part of an ambitious approach to tackle pollution from all sources and move towards a toxic-free environment.** This Regulation should complement existing rules set out in other legislative instruments.

**(8b) Since the Union already has one of the most comprehensive and protective regulatory frameworks for chemicals, supported by the most advanced knowledge base globally, this Regulation** should not affect the application of existing Union **law** ~~legislation~~ relating to aspects of protection of health, of safety and of the environment not covered by this Regulation. This Regulation should, in particular, apply without prejudice to Regulation (EC) No 1907/2006, **as well as** Regulation**s** (EU) No 528/2012 ~~of the European Parliament and of the Council~~[4] and ~~to Regulation~~ (EC) No 1272/2008 ~~of the European Parliament and of the Council~~[5] of the European Parliament and of the Council **and to Directive (EU) 2024/… of the European Parliament and of the Council concerning Urban Waste Water Treatment.**

(9) Surfactants are surface-active agents that help break down the interface between water and oils or dirt. They are one of the main ingredients used in detergents. Surfactants could, however, pose a risk to the environment as they are discharged into sewage systems or directly into surface waters. To prevent any advere effects that surfactants could have on the environment, it is necessary to set requirements ensuring that surfactants**, and some** others **substances including polymers,** are ~~completely~~ biodegradable either when placed on the market on their own and intended for use in detergents or when contained in detergents.

[4] Regulation (EU) No 528/2012 of the European Parliament and of the Council of 22 May 2012 concerning the making available on the market and use of biocidal products (OJ L 167, 27.6.2012, p. 1).

[5] Regulation (EC) No 1272/2008 of the European Parliament and of the Council of 16 December 2008 on classification, labelling and packaging of substances and mixtures, amending and repealing Directives 67/548/EEC and 1999/45/EC, and amending Regulation (EC) No 1907/2006 (OJ L 353, 31.12.2008, p. 1).

(10) Phosphorus is a**n other** key ingredient used in detergents. However, phosphorus and its compounds could cause damage to ecosystems and aquatic environments as they contribute to eutrophication. To further ensure a high level of protection of the environment, and reduce the contribution of detergents to that phenomenon, it is necessary to establish harmonised limits on the content of phosphates and phosphorus compounds in consumer laundry and consumer automatic dishwasher detergents. Similar limitations ~~are not required~~ for other types of detergents **should be assessed, particularly to investigate when**~~either because their contribution is not significant or because~~ suitable alternatives ~~are currently not~~ **become** available.

(11) In recent years, novel cleaning products have been developed that contain living micro-organisms as active ingredients. Micro-organisms have their own biology and response to the environment. Due to their ability to proliferate, there is a clear difference between conventional and microbial detergents. Therefore, the inherent hazards and arising risks are not necessarily of the same nature as those presented by chemicals, especially in relation to the capacity of micro-organisms to persist and multiply in different environments and to produce a range of different metabolites and toxins of potential toxicological significance.

(12) Since micro-organisms are not subject to registration under Regulation (EC) No 1907/2006 or any other Union legislation requiring manufacturers to demonstrate that the intended use is safe, they should be eligible for use in detergents only to the extent that they have been clearly identified and supported by data demonstrating that their use is safe, and subject to specific requirements governing their safety. Harmonised rules governing the safety of micro-organisms in detergents as well as relevant test methods for economic operators to demonstrate compliance with those rules should, therefore, be established. Restrictions are required on the format in which detergents containing micro-organisms are placed on the market ~~when sensitising ingredients are included in their composition. T~~**t**o ensure a high level of protection of human health**.**~~ even for sensitised persons, d~~**D**etergents containing micro-organisms and which are placed on the market in a spray format should, therefore, be **subject to specific provisions ensuring their safe use**~~ found safe for use in this format~~.

(13) To ensure a high level of protection of the aspects of public interest, and to guarantee fair competition on the internal market, economic operators should be responsible for the compliance of detergents or surfactants with this Regulation, in relation to their respective roles in the supply chain. Whenever appropriate, manufacturers and importers should carry out sample testing of the detergents and surfactants that they have made available on the market, in order to protect the health and safety of consumers and the environment.

(14) All economic operators intervening in the supply and distribution chain should take appropriate measures to ensure that they only make available on the Union market detergents and surfactants which are in conformity with this Regulation. It is necessary to provide for a clear and proportionate distribution of obligations which correspond to the role of each economic operator in the supply and distribution chain.

(15) In order to enable economic operators to demonstrate and the competent authorities to verify that detergents and surfactants made available on the market comply with the requirements of this Regulation, it is necessary to provide for a conformity assessment procedure. Decision No 768/2008/EC establishes modules for conformity assessment procedures, from the least stringent to the most stringent, in proportion to the level of risk involved and the level of safety required. In order to ensure inter-sectoral coherence and to avoid ad-hoc variants, Decision No 768/2008/EC specifies that conformity assessment procedures should be chosen from among those modules.

(16) The manufacturer, having detailed knowledge of the design and production process, is best placed to ensure compliance of the detergent or surfactant with the requirements of this Regulation. Manufacturers-hould therefore be ~~solely~~ responsible for **the** carrying out **of** the conformity assessment procedure for detergents and surfactants. Module A should be applicable for the conformity assessment of detergents and surfactants. Manufacturers should also put together a technical dossier demonstrating compliance of the detergent or surfactant with the relevant rules and test methods.

(17) ~~To facilitate compliance of the manufacturers with their obligations under this Regulation, manufacturers established in the Union should be allowed to appoint an authorised representative to carry out specific tasks on their behalf. Moreover, to ensure a clear and proportionate distribution of responsibilities between the manufacturer and the authorised representative it is necessary to set out the list of tasks that manufacturers should be allowed to entrust the authorised representative with. Further, t~~ **T**o ensure the enforceability and effectiveness of the market surveillance requirements and that only compliant detergents and surfactants are placed on the Union market, **there should always be an entity established in the Union responsible for liaising with market surveillance authorities and for ensuring compliance with aspects of this Regulation. To this end, manufacturers established outside the Union should appoint an authorised representative established in the Union in respect of detergents and surfactants placed on the market without an importer. This is the case, for instance, where a third country manufacturer places the product directly on the market via distance sale, including via online market places. To that end, this Regulation should set out a list of tasks with which such manufactuers should be required to entrust authorised representatives. This should include an obligation to verify that the information and technical documentation supplied by the manufacturer demonstrate *prima facie* compliance with the Regulation's requirements. This means verifying that at first sight the technical documentation demonstrates such compliance. Accordingly, the authorised representative should not be required to conduct detailed investigations or exhaustive analyses of compliance. That obligation ensures appropriate consumer, health and environmental protection whilst respecting, in accordance with the principle of proportionality, the particular role and capacities of authorised representatives. For the same reason, the authorised representative should provide the ingredients data sheet under certain conditions, ensure that the detergent or surfactant complies with labelling requirements, ensure that technical documentation is at the disposal of national market surveilliance authorities, including upon request to demonstrate conformity, alert the manufacturer and market surveilliance authorities of any risk of which the authorised representative becomes aware, and cooperate with competent national authorities on action to eliminate risks.** ~~the appointment of an authorised representative should be mandatory when the manufacturer is established outside of the Union.~~

(18) With a view to facilitating the communication between economic operators, market surveillance authorities and consumers, economic operators should, as part of their contact details, indicate **and keep up to date** a website address in addition to the postal address.

(19) In order to safeguard the functioning of the internal market and to ensure that the objective of providing a high level of protection of health and the environment is achieved, it is necessary to establish that detergents and surfactants from third countries entering the Union market**, including via online sales,** also comply with this Regulation. In particular, it is necessary to ensure that appropriate conformity assessment procedures have been carried out by manufacturers with regard to those products. It is also necessary to lay down rules for importers to ensure that the detergents and surfactants ~~they~~ place**d** on the market comply with those requirements and that the documentation drawn up by manufacturers ~~and, where relevant, the CE marking are~~ **is** available for inspection by the competent national authorities. Provision should also be made for importers **and authorised representatives, where applicable,** to ensure that a **digital** product passport is available for those products.

(20) Since importers **and where applicable authorised representatives** play a key role in guaranteeing the compliance of imported detergents and surfactants in the Union market, ~~they should indicate on the~~ product **label should include** their name, registered trade name or registered trade mark as well as their postal address and, where available, electronic means of communication through which they can be contacted.

(21) As the distributor makes a detergent or surfactant available on the market after it has been placed there by the manufacturer or importer, the distributor should act with due care in relation to the applicable requirements. The distributor should also ensure that its handling of the detergent or surfactant does not adversely affect its compliance with the requirements of this Regulation.

(22) Since distributors**,** ~~and~~ importers **and where applicable authorised representatives,** are close to the marketplace and have an important role in ensuring product compliance, they should be involved in market surveillance tasks carried out by the competent national authorities, and should be prepared to participate actively, providing those authorities with all necessary information relating to the detergent or surfactant concerned.

(23) Economic operators that either place a detergent or surfactant on the market under their own name or trade mark or modify a detergent or surfactant in such a way that compliance with this Regulation could be affected should be considered to be manufacturers and should assume the obligations of manufacturers. In other cases, economic operators that only package or repackage a detergent or surfactant already placed on the market by other economic operators should be able to prove that compliance with the requirements of this Regulation has not been affected, by indicating their identity on the package and by keeping a copy of the original labelling information.

**(23a) Since industrial and institutional detergents are to be used by specialised personnel outside the domestic sphere, these detergents are to some extent subject to other requirements than consumer detergents. In order to avoid risks for the health of consumers or the environment and to facilitate market surveillance activities, it is important to ensure that such products are clearly identified by their label.**

~~(24) The CE marking, indicating the conformity of a detergent with this Regulation, is the visible consequence of a whole process comprising conformity assessment in a broad sense. Regulation (EC) No 765/2008 of the European Parliament and of the Council lays down the general principles of the CE marking. That Regulation should be applicable to detergents covered by this Regulation in order to ensure that products benefiting from the free movement of goods within the Union fulfil requirements providing a high level of protection of public interests such as health and the environment. In line with Regulation (EC) No 765/2008, the CE marking should be the only marking of conformity indicating that the detergent is in conformity with Union harmonisation legislation.~~

(25) To ensure a high level of protection of human health, **the Member States' appointed bodies should have access to qualitative and quantitative information on the composition of detergents and surfactants.** ~~m~~**M**anufacturers**, and their importer or authorised representative where applicable,** should ~~be~~ **therefore be** required to provide an ingredient**s** data sheet for non-hazardous detergents **and surfactants** . ~~In order to optimise efficiency of the relevant requirements and in view of the system related to emergency health response already established under Regulation (EC) No 1272/2008, manufacturers should hold this information at the disposal of poison centres, upon request.~~ **A manufacturer should not be able to refuse to provide this data on the grounds that the importer or authorised representative may also provide it, and vice versa.**

(26) Labels communicate important use and safety information to users, such as the presence of skin or respiratory sensitisers (e.g. allergenic fragrances, preservatives or enzymes) in detergents and surfactants. By providing information on the content of those substances on the labels of detergents and surfactants, it is possible for users with allergies or allergic predispositions to make informed choices, and potential reactions related to the use of detergents and surfactants are thus reduced. It is therefore necessary to establish labelling requirements for detergents and surfactants.

(27) Since the labelling of detergents and surfactants may fall under multiple pieces of Union legislation, the information on detergents' and surfactants' labels needs to be streamlined so that when similar information stemming from different pieces of Union legislation is required on detergents' and surfactants' labels, this information is provided only once in accordance with the stricter rules. This will, on one hand, improve the readability and understandability of detergents' and surfactants' labels by end users and, on the other, reduce regulatory burden for detergents' and surfactants' manufacturers.

(28) Fragrance substances are organic compounds with characteristic, usually pleasant, odours, which are widely used in detergents but also in many other products such as perfumes and other perfumed cosmetics. Those substances could cause an allergic reaction upon contact, especially to sensitised persons, even when contained in low concentrations. Therefore, it is important to provide information on the presence of individual **fragrance** allergen**s**~~sic fragrances~~ in detergents so that sensitised persons can avoid contact with the substance to which they are allergic. It is therefore necessary to lay down strict requirements for the labelling of **fragrance** allergen**s**~~sic fragrances~~. However, those substances could also trigger a labelling requirement under Regulation (EC) No 1272/2008. Specific labelling requirements should therefore be established that would apply only when the labelling thresholds under Regulation (EC) No 1272/2008 are not met. This will not only prevent the unnecessary burden for economic operators but also ensure that **consumers or other** end-users receive this information presented in a clear manner thus providing a high level of protection of human health even for sensitised persons.

(29) Additional labelling requirements are needed for certain substances such as preservatives in order to ensure a high level of health protection. The labelling requirements for preservatives should, therefore, cover not only those preservatives ~~intentionally~~ added by the manufacturer in the detergent but also those that ensue from its constituent mixtures and which are often referred to as 'carry-over preservatives'.

(30) Information on the correct amount of detergent that consumers need to use when undertaking cleaning activities, *namely,* dosage information, should be included on the label of consumer laundry**,** ~~and~~ consumer automatic dishwasher detergents **and consumer detergents for surfaces** in order to prevent the potential over-use of detergents thus reducing the total amount of detergent and surfactant entering the environment.

(31) Digital labelling could improve the communication of labelling information both by avoiding overcrowded physical labels and by allowing users to rely on various reading options available only for digital formats, such as increased font, automatic search, loud speakers or translation into other languages. Providing digital labels could also lead to a more efficient management of the labelling obligations by economic operators, by facilitating the update of labelling information, reducing labelling costs and permitting a more targeted information of users. Therefore, economic operators should be allowed to provide certain labelling information only through the digital label subject to certain conditions to ensure a high level of protection of detergents' users.

(32) To avoid imposing an unnecessary administrative burden for economic operators and since, in most cases, the digital label is only complementary to the physical one, economic operators should be able to decide whether to use digital labels or provide all the information on a physical label only. The choice to provide a digital label should rest with manufacturers and importers, who are responsible for providing the accurate set of labelling information.

(33) Digital labelling could also create challenges for the vulnerable population groups with no or insufficient digital skills and lead to an accentuation of the digital divide. For this reason, the specific information to be provided only in a digital label should reflect the current state of the digitalisation of the society and the particular situation of detergents users. In addition, all the labelling information concerning the protection of health and the environment, as well as minimum use instructions of detergents, should remain on the physical label, to enable ~~all~~**consumers or other** end-users to make informed choices before buying the detergent and to ensure its safe handling.

~~(34) An exception should, nevertheless, be made for detergents sold to end-users in a refill format. In order to fully reap not only the benefits offered by digitalisation but also the large environmental benefits in terms of reduction of packaging and related packaging waste that the practice of refill sales offers, it should be permitted to provide all labelling information digitally with the exception of dosage instructions for consumer laundry detergents.~~

(35) To ensure a level playing field among economic operators making available detergents on the market, and to protect **consumers and other** end-users, general requirements for digital labelling should be laid down. For example, economic operators should ensure free and easy access to digital labels and that mandatory labelling information requested under this Regulation is separated from other information.

(36) Given the current development of the digital skills, economic operators should also provide the labelling information by alternative means to **consumers and other** end-users when they cannot access the digital label. This obligation should be imposed as a safety measure to reduce any potential risks by the unavailability of the labelling information~~, in particular as regards refilled detergents, where all the information may be provided in a digital label~~.

(37) Since detergents have the same use and present the same risks irrespective of the format in which they are made available on the market, economic operators making detergents available on the market in a refill format should ensure that these comply with the same requirements as the pre-packaged ones. In addition, consumers should receive the required labelling information also when opting for refilled detergents. The refill sale of detergents should, therefore, be explicitly covered by this Regulation in order to ensure a high level of protection of health and the environment and a level playing field for economic operators.

**(37a) In order to keep pace with technological development and new means of sale, while ensuring good information of consumers and efficient market surveillance activities, it is necessary to require the labelling elements of detergents and surfactants to be indicated in case of distance sales, including via online market places.**

(38) Ensuring traceability of a detergent or surfactant throughout the whole supply chain helps to make market surveillance simpler and more efficient. An efficient traceability system facilitates market surveillance authorities' task of tracing economic operators who made non-compliant detergents or surfactants available on the market.

(39) Manufacturers should create a **digital** product passport to provide information on the conformity of detergents and surfactants with this Regulation, ~~as well as~~**and** with ~~any~~ other **Union law**~~legislation~~ **applicable to** ~~that~~ the detergent or surfactant ~~must comply with~~. In order to facilitate checks on detergents or surfactants **by market surveillance authorities** and to allow the actors in the supply chain**,** ~~and~~ **consumers and other** end-users to access necessary information such as ingredients ~~and use instructions~~, the information on the **digital** product passport should be provided digitally and in a directly accessible manner, through a data carrier ~~affixed to the label of the detergent or surfactant, its packaging or the accompanying documentation~~. **The data carrier should be clearly visible to the end-user before any purchase, including when the detergent or surfactant is made available through an online advertisement.** Market surveillance authorities, **customs authorities,** economic operators**,** ~~and~~ **consumers and other** end-users should, therefore, have immediate access to **the** ~~compliance or other~~ information **relevant to them and based on their respective access rights** on the detergent or surfactant through the data carrier.

(40) To avoid duplication of investment into digitalisation by all actors involved, including manufacturers, market surveillance authorities and customs authorities, **where other Union law requires a digital product passport for detergents or surfactants, a single digital product passport should be available containing the information requested under this Regulation and the other Union law. In addition,** the **digital** product passport established under this Regulation should be fully interoperable with **any** ~~the~~ **digital** product passport required under other Union **law**~~legislation~~.

(41) In particular, Regulation (EU) …/… [~~of the European Parliament and of the Council~~ establishing a framework for setting ecodesign requirements for sustainable products and repealing Directive 2009/125/EC] also lays down requirements and technical specifications for a digital product passport, the establishment of a Commission ~~central~~**digital product passport** registry **(the 'registry')** where passport information is stored and the interconnection of that registry with the customs IT systems. That Regulation could include detergents or surfactants within its scope in the medium term, thus requiring that a digital product passport is available for them.

(42) The **digital** product passport for detergents and surfactants created under this Regulation should therefore comply with the same requirements and technical elements as those set out in Regulation (EU) …/… ~~on ecodesign requirements for sustainable products~~ **establishing a framework for setting ecodesign requirements for sustainable products and repealing Directive 2009/125/EC**, including its technical, semantic and organisational aspects of end-to-end communication and data ~~transfer~~**exchange**.

~~(43) When other Union legislation applicable to detergents or surfactants requires a product passport, a single product passport should be available for detergents and surfactants containing the information required under this Regulation and the other Union legislation.~~

(44) It is crucial to make clear to both manufacturers and users that by creating the **digital** product passport for detergent or surfactant ~~and, where relevant, by affixing the CE marking~~, the manufacturer declares that the detergent or surfactant is in conformity with all applicable requirements and that the manufacturer takes full responsibility thereof.

(45) Where certain information is provided only digitally, it is necessary to clarify that this information needs to be provided separately and clearly distinguished from each other but through a single data carrier. This will facilitate the work of market surveillance authorities but also provide clarity to **consumers or other** end-users regarding the different pieces of information that are available to them in a digital format.

(46) Chapter VII of Regulation (EU) 2019/1020 of the European Parliament and the Council[6], setting up the rules of controls on products entering the Union market, applies to detergents and surfactants. The authorities in charge of those controls, which in almost all Member States are the customs authorities, are to perform them on the basis of risk analysis as referred to in Articles 46 and 47 of Regulation (EU) No 952/2013 of the European Parliament and of the Council[7], its implementing legislation and the corresponding guidance. This Regulation should therefore not modify in any way Chapter VII of Regulation (EU) 2019/1020 and the way the authorities in charge of controls on products entering the Union market organise themselves and perform their activities.

(47) In addition to the framework of controls established by Chapter VII of Regulation (EU) 2019/1020, customs authorities should be able to automatically verify that a **digital** product passport exists for imported detergents and surfactants subject to this Regulation in order to strengthen the controls at the Union's external borders and prevent non-compliant detergents and surfactants from entering the Union market.

[6] Regulation (EU) 2019/1020 of the European Parliament and of the Council of 20 June 2019 on market surveillance and compliance of products and amending Directive 2004/42/EC and Regulations (EC) No 765/2008 and (EU) No 305/2011 (OJ L 169, 25.6.2019, p. 1).

[7] Regulation (EU) No 952/2013 of the European Parliament and of the Council of 9 October 2013 laying down the Union Customs Code (OJ L 269, 10.10.2013, p. 1).

(48) When detergents and surfactants coming from third countries are ~~presented for~~**placed under the customs procedure of** release for free circulation, **the reference to a digital product passport for those detergents and surfactants should be made available to the customs authorities by the economic operator.**~~customs should ensure that the reference of a product passport is made available to customs authorities by the economic operator and that this~~ **The** reference **to the digital product passport should** corresponds~~s~~ to a unique ~~product~~ **registration** identifier **communicated to the economic operator by the digital product passport registry established under Article 13 of Regulation (EU) …/… [ESPR].** ~~that is stored in the product passport registry established by the Commission under [Article 12 of Regulation (EU) …/… on Ecodesign for Sustainable Products]. The interconnection between this registry and the customs IT system as provided for in [Article 13 of Regulation (EU) …/… on ecodesign requirements for sustainable products]~~ **Customs authorities** should ~~allow for automatic verification of the product passport presented to customs for~~ **verify as a minimum** that **the unique registration identifier and the relevant commodity code for the** detergent or surfactant **provide or made available to them correspond to the data that are stored in the registry.**~~, so as to ensure that only detergents and surfactants with a valid reference to a unique product identifier as included in the registry are released for free circulation.~~ **This would allow customs authorities to verify that a digital product passport for imported detergents and surfactants exists. To carry out that automatic verification, the interconnection between the registry and the customs IT systems as provided for in Article 15 of [Regulation (EU) …/… establishing a framework for setting ecodesign requirements for sustainable products and repealing Directive 2009/125/EC] should be used.**

~~(49) Where other information in addition to the unique product identifier and the unique operator identifier is stored in the product passport registry established under [Article 12 of Regulation (EU) …/… on Ecodesign for Sustainable Products], the Commission should be able to provide in a delegated act, that customs authorities are allowed to verify the consistency between this additional information and the information made available by the economic operator to customs, in order to improve the compliance of detergents and surfactants placed under the customs procedure of release for free circulation with this Regulation.~~

(50) The ~~information~~ **data** included in the **digital** product passport ~~may~~ **are intended to** allow customs authorities to ~~enrich~~ **enhance** and facilitate risk management and enable **the controls at the border to be**~~the~~ better target**ed**~~ing of controls at the Union's external borders~~. Therefore, customs authorities should be able to retrieve and use the ~~information~~ **data** included in the **digital** product passport and the related registry for carrying out their tasks in accordance with Union **law** ~~legislation~~ including for risk management in accordance with Regulation (EU) No 952/2013.

~~(51) It is appropriate to provide for the publication of a notice in the *Official Journal of the European Union* indicating the date when the interconnection between the registry and the EU Customs Single Window Certificates Exchange System referred to in [Article 13 of Regulation (EU) …/… on Ecodesign for Sustainable Products] becomes operational in order to facilitate public access to that information.~~

(52) The automatic verification by customs **authorities** of the **digital** product passport reference for detergents and surfactants entering the Union market should not replace or modify the responsibilities of the market surveillance authorities but only complement the overall framework for controls on products entering the Union market. The market surveillance authorities should, in line with Regulation (EU) 2019/1020, carry out checks of the ~~information~~ **data** contained in products passports, checks on products within the market and, in case of suspension of release for free circulation by the authorities designated for controls at Union's external borders, determine the compliance and serious risks of products pursuant to Chapter VII of Regulation (EU) 2019/1020.

(53) Market surveillance is an essential instrument inasmuch as it ensures the proper and uniform application of Union legislation. Regulation (EU) 2019/1020 sets out the framework for market surveillance of products subject to Union harmonisation legislation. Member States should therefore organise and carry out market surveillance of detergents and surfactants in accordance with that Regulation.

~~(54) Regulation (EU) 2019/1020 already applies to detergents and surfactants, since Regulation (EC) No 648/2004 is listed in its Annex I. However, in order to ensure legal certainty, it is necessary to clarify that rules on internal market surveillance and control of products entering the internal market provided for in Regulation (EU) 2019/1020 also apply to detergents and surfactants covered by this Regulation. This Regulation should not prevent Member States from choosing the competent authorities to carry out those tasks. Regulation (EU) 2019/1020 should therefore be amended to include a reference to this Regulation.~~

(55) Regulation (EC) No 648/2004 provides~~ed~~ for a safeguard procedure allowing the Commission to examine the justification for a measure taken by a Member State against detergents and surfactants considered to constitute a risk. In order to increase transparency and to reduce processing time, it is necessary to improve the previous safeguard procedure, with the view to making it more efficient and drawing on the expertise available in Member States. The previous system should be replaced by a procedure under which interested parties are informed of measures intended to be taken with regard to detergents and surfactants presenting a risk to health or the environment. Market surveillance authorities should be allowed, in cooperation with the relevant economic operators, to act at an early stage in respect of such detergents and surfactants. The Commission should, by means of implementing acts and, given their special and technical nature, acting without the application of Regulation (EU) No 182/2011, determine whether a national measure in respect of a detergent or surfactant presenting a risk is justified. **This specific safeguard procedure applies without prejudice to routine controls performed by market surveillance authorities in accordance with Regulation (EU) 2019/1020.**

(56) Experience with Regulation (EC) No 648/2004 has shown that detergents and surfactants which were compliant with the applicable requirements have in specific cases posed a risk to health or the environment. Provisions should be made to ensure that market surveillance authorities take action against any detergent or surfactant presenting a risk to health or the environment, even when compliant with the legal requirements. The Commission should, by means of implementing acts and, given their special and technical nature, acting without the application of Regulation (EU) No 182/2011, determine whether a national measure in respect of compliant detergents or surfactants which a Member State finds to pose a risk to health and safety of persons or the environment is justified.

(57) In order to take into account technical and scientific progress or new scientific evidence, and the level of digital readiness, the power to adopt acts in accordance with Article 290 of the Treaty on the Functioning of the European Union should be delegated to the Commission in respect of **amending Annexes I to V and VII to adapt them to technical progress, of** further supplementing the general requirements on digital labelling; amending the labelling information that may be provided in digital format only; amending the limit of the **fragrance** allergen**s**~~sic fragrances~~ when individual risk-based concentration limits for fragrance allergens are established under Regulation (EC) No 1223/2009 **or adding new fragrance allergens in the Appendix**; amending the existing biodegradability requirements to introduce biodegradability requirements for substances and mixtures other than surfactants in detergents (including detergent capsules) when new scientific evidence so requires **or allowing for derogation from such criteria in dully justified cases**; ~~and amending Annexes I to VII~~. The Commission should also be empowered to amend **by means of delegated acts** the specific information that should be included in the **digital** product passport, as well as the information to be included in the Commission registry. ~~Moreover, the Commission should be empowered to supplement this Regulation by determining the additional information stored in the registry to be controlled by customs authorities.~~ In addition, in order to facilitate the work of customs authorities in relation to detergents and surfactants and the requirements set out in this Regulation, the Commission should be empowered to adopt delegated acts amending this Regulation by providing an Annex containing a list of **commodity**~~Combined Nomenclature~~ codes, as set out in Annex I to Regulation (EEC) No 2658/87, and product descriptions of detergents and surfactants and by updating such Annex.

(58) When adopting delegated acts under this Regulation, it is of particular importance that the Commission carry out appropriate consultations during its preparatory work, including at expert level, and that those consultations be conducted in accordance with the principles laid down in the Interinstitutional Agreement of 13 April 2016 on Better Law-Making[8]. In particular, to ensure equal participation in the preparation of delegated acts, the European Parliament and the Council receive all documents at the same time as Member States' experts, and their experts systematically have access to meetings of Commission expert groups dealing with the preparation of delegated acts.

(59) In order to ensure uniform conditions for the implementation of this Regulation, implementing powers should be conferred on the Commission to establish the detailed technical requirements for the **digital** product passport for detergents and surfactants. Those powers should be exercised in accordance with Regulation (EU) No 182/2011 of the European Parliament and of the Council[9].

(60) In view of the need to ensure a high level of human health and environmental protection and the need to take into account new developments based on scientific facts, the Commission should submit to the European Parliament and to the Council a report on the application of this Regulation. The Commission should in its report assess *inter alia* if this Regulation is achieving its objectives, taking into account the impacts on small and medium-sized enterprises.

---

8 OJ L 123, 12.5.2016, p. 1.

9 Regulation (EU) No 182/2011 of the European Parliament and of the Council of 16 February 2011 laying down the rules and general principles concerning mechanisms for control by Member States of the Commission's exercise of implementing powers (OJ L 55, 28.2.2011, p. 13)

**(60a) Similarly, in terms of the most harmful substances and biocidal active substances, the Commission should, while taking into account of achievements under other relevant regulations, assess the need to include or adapt provisions in this regulation for the presence of these substances in detergents and surfactants, for the purposes of ensuring fulfilment of the goals set in the European Green Deal concerning the generic approach to risk management for the most harmful substances in consumer products and of avoiding circumvention of the approval scheme in the Regulation (EU) No 528/2012.**

(61) In order to ensure a high level of protection of health and the environment, foster innovation and boost competitiveness, the Commission should assess the safety requirements for detergents containing micro-organisms and the possibility to allow **or ban** the use of new micro-organisms or strains of micro-organisms in detergents.

(62) This Regulation introduces the possibility of providing all or part of the mandatory labelling requirements only in digital labels in certain situations and requires the creation of a digital product passport for detergents and surfactants. It is, therefore, necessary to provide for sufficient time for economic operators to comply with their obligations under this Regulation, for Member States to set up the administrative infrastructure necessary for its application and for the Commission to prepare the implementation of ~~the product passport~~**the digital product passport**'s technical requirements. Consequently, the application of this Regulation should be deferred to a date where those preparations can reasonably be finalised.

(63) In order to ensure legal certainty and to prevent waste, economic operators need to be able to sell stock that is either in the distribution chain or in storage at the date of application of this Regulation. It is, therefore, necessary to provide for transitional arrangements that allow the making available on the market of detergents and surfactants that have been placed on the market in accordance with Regulation (EC) No 648/2004 before the date of application of this Regulation without those products having to comply with product requirements laid down by this Regulation. Distributors should therefore be able to supply detergents and surfactants that have been placed on the market, namely stock that is already in the distribution chain, before the date of application of this Regulation.

(64) **Again to ensure legal certainty and to prevent waste, it is important that economic operators be able to sell stock, for a limited period, that is not yet in the distribution chain after the date of application of this Regulation. To this end, t**~~T~~ransitional arrangements should also be made that allow the placing on the market of detergents and surfactants that at the date of application of this Regulation are not yet in the distribution chain without those products having to comply with the requirements laid down by this Regulation, provided that ~~at the time of their placing on the market they are still compliant with~~**they comply with** Regulation (EC) No 648/2004. Manufact**-**urers and importers should therefore be able to place on the market detergents and surfactants, namely stock that is not yet in the distribution chain, after the date of application of this Regulation. **Given the objective of this transitional period, this possibility should be strictly limited in time to one year after that date of application and, in particular, it should not be possible to make such stok available after that one year.**

(65) Since the objective of this Regulation, namely to guarantee the functioning of the internal market while ensuring that detergents and surfactants on the market fulfil the requirements providing for a high level of protection of health and the environment, cannot be sufficiently achieved by the Member States but can rather, by reason of its scale and effects, be better achieved at Union level, the Union may adopt measures, in accordance with the principle of subsidiarity as set out in Article 5 of the Treaty on European Union. In accordance with the principle of proportionality, as set out in that Article, this Regulation does not go beyond what is necessary in order to achieve that objective,

HAVE ADOPTED THIS REGULATION:

# CHAPTER I

# GENERAL PROVISIONS

*Article 1*

**Subject matter**

1. This Regulation establishes rules for the free movement of detergents and surfactants in the internal market, while, at the same time, ensuring a high degree of protection of health and the environment.

2. This Regulation does not affect the application of the following legal acts:

   (a) Regulation (EC) No 1907/2006 of the European Parliament and of the Council[10];

   (b) Regulation (EC) No 1272/2008 of the European Parliament and of the Council[11];

   (c) Regulation (EU) No 528/2012 of the European Parliament and of the Council[12];

   **(d) Directive (EU) No .../… of the European Parliament and of the Council regarding Urban Waste Water Treatment.**

---

10 Regulation (EC) No 1907/2006 of the European Parliament and of the Council of 18 December 2006 concerning the Registration, Evaluation, Authorisation and Restriction of Chemicals (REACH), establishing a European Chemicals Agency, amending Directive 1999/45/EC and repealing Council Regulation (EEC) No 793/93 and Commission Regulation (EC) No 1488/94 as well as Council Directive 76/769/EEC and Commission Directives 91/155/EEC, 93/67/EEC, 93/105/EC and 2000/21/EC (OJ L 396, 30.12.2006, p. 1).

11 Regulation (EC) No 1272/2008 of the European Parliament and of the Council of 16 December 2008 on classification, labelling and packaging of substances and mixtures, amending and repealing Directives 67/548/EEC and 1999/45/EC, and amending Regulation (EC) No 1907/2006 (OJ L 353, 31.12.2008, p. 1).

12 Regulation (EU) No 528/2012 of the European Parliament and of the Council of 22 May 2012 concerning the making available on the market and use of biocidal products OJ L 167, 27.6.2012, p. 1).

*Article 2*

**Definitions**

For the purpose of this Regulation, the following definitions apply:

(1) ‘detergent’ means any of the following:

– a substance, mixture or micro-organism, or ~~two or more such materials in~~ combination **thereof**, which is intended for cleaning of fabrics, dishes or surfaces~~;~~

– a **substance,** ~~**or**~~ mixture **or micro-organism, or combination thereof,** intended for soaking (pre-washing), rinsing or bleaching fabrics**,** ~~or~~ dishes **or surfaces**;

– a **substance,** ~~**or**~~ mixture **or micro-organism, or combination thereof,** intended to modify the feel of fabrics in processes which are to complement the washing of fabrics;

**– a substance, mixture or micro-organisms or a combination thereof intended to support the cleaning process, to be used together with a laundry detergent or an automatic dishwasher detergent;**

(2) ‘consumer laundry detergent’ means a detergent for laundry placed on the market for use by non-professionals, including in public laundrettes;

(3) ‘consumer automatic dishwasher detergent’ means a detergent placed on the market for use in automatic dishwashers by non-professionals;

(4) ‘detergent containing micro-organisms’ means a detergent in which one or more micro-organisms has been ~~intentionally~~ added, either on its own or via one of the components of the detergent;

(5) ‘**industrial and institutional** ~~professional~~ detergent’ means a detergent **placed on the market only** for **use** ~~cleaning~~ outside the domestic sphere, carried out by specialised personnel ~~using specific products~~;

(6) ‘cleaning’ means the process by which an undesirable deposit is dislodged from a substrate or from within a substrate and brought into a state of solution or dispersion;

(7) ‘substance’ means a substance as defined in Article 3, point (1), of Regulation (EC) No 1907/2006;

(8) ‘mixture’ means a mixture as defined in Article 3, point (2), of Regulation (EC) No 1907/2006;

(9) ‘micro-organism’ means a micro-organism as defined in Article 3(1), point (b), of Regulation (EU) No 528/2012;

(10) ‘genetically modified micro-organisms’ means micro-organisms in which the genetic material has been altered using gene or cell technology or in any other way that does not occur naturally by mating or natural recombination.

(11) ‘surfactant’ means any organic substance or mixture used in detergents, which has surface-active properties and which consists of one or more hydrophilic and one or more hydrophobic groups of such a nature and size that it is capable to perform all of the following actions:

– to reduce the surface tension of water below 45 mN/m;

– to form spreading or adsorption monolayers at the water-air interface;

– to form emulsions and/or microemulsions and/or micelles;

– to adsorpt at water-solid interfaces;

(12) ‘ultimate aerobic biodegradation’ means the level of biodegradation achieved when the substance or mixture is totally used by micro-organisms in the presence of oxygen resulting in its breakdown to carbon dioxide, water and mineral salts of any other elements present, as measured by test methods listed in Annex I, and new microbial cellular constituents **(biomass)**;

(13) ‘making available on the market’ means any supply for distribution, consumption or use on the Union market in the course of a commercial activity, whether in return for payment or free of charge;

(14) ‘placing on the market’ means the first making available on the Union market**;**

(15) ‘manufacturer’ means any natural or legal persons that manufacture or have a detergent or a surfactant designed or manufactured, and place that detergent or surfactant on the market under their name or trademark;

(16) ‘authorised representative’ means any natural or legal persons established within the Union that have received **and accepted** a written mandate from a manufacturer to act on their behalf ~~in relation to specified tasks~~;

(17) ‘importer’ means any natural or legal persons established within the Union that place a detergent or surfactant from a third country on the Union market;

(18) ‘distributor’ means any natural or legal persons in the supply chain, other than the manufacturer or the importer, that make a detergent or surfactant available on the market;

(19) ‘economic operator’ means the manufacturer, the authorised representative, the importer or the distributor;

(20) ‘market surveillance’ means the activities carried out and measures taken by market surveillance authorities to ensure that products comply with the requirements set out in this Regulation;

(21) ‘market surveillance authority’ means a market surveillance authority as defined in Article 3, point **(**4**)**, of Regulation (EU) 2019/1020;

(22) ‘recall’ means a recall as defined Article 3, point **(**22**)**, of Regulation (EU) 2019/1020;

(23) ‘withdrawal’ means a withdrawal as defined in Article 3, point **(**23**)**, of Regulation (EU) 2019/1020;

~~(24) 'CE marking' means a marking by which the manufacturer indicates that the detergent is in conformity with the applicable requirements set out in Union harmonisation legislation providing for its affixing;~~

(25) 'corrective measure' means a measure as defined in Article 3, point **(**16**)**, of Regulation (EU) 2019/1020;

(26) 'release for free circulation' means the procedure laid down in Article 201 of Regulation (EU) No 952/2013;

(27) 'data carrier' means a linear bar code symbol, a two-dimensional symbol or other automatic identification data capture medium that can be read by a device;

(28) 'unique product identifier' means a unique string of characters that allows the identification of a product and enables a web link to the **digital** product passport;

(29) 'unique operator identifier' means a unique string of characters for the identification of economic operators involved in the value chain of products;

**(29a) 'digital product passport service provider' means a digital product passport service provider within the meaning of Article 2, point (32) of Regulation (EU) .../... [ESPR];**

(30) 'customs authorities' means customs authorities as defined in Article 5, point **(**1**)**, of Regulation (EU) No 952/2013;

(31) 'EU Customs Single Window Certificates Exchange System' means the system referred to in Article 4 of the Regulation (EU) 2022/2399 of the European Parliament and of the Council[13];

[13] Regulation (EU) 2022/2399 of the European Parliament and of the Council of 23 November 2022 establishing the European Union Single Window Environment for Customs and amending Regulation (EU) No 952/2013 (OJ L 317, 9.12.2022, p. 1).

(32) ‘individual packaging’ means packaging in which the detergent or surfactant is made available on the market and which is intended to accompany the content to the place of use;

(33) ‘refill’ means the **on-site** operation by which **a detergent or surfactant offered by an economic operator in the course of a commercial activity, whether in return for payment or free of charge, is filled in a packaging;** ~~the detergent is filled in-store from a large container in the end-users’ own package either manually or through automatic or semi-automatic equipment;~~

**(33a) ‘refill station’ means a place where an economic operator offers to end-users a detergent or surfactant that can be acquired through refill, either manually or through automatic or semi-automatic equipment;**

(34) ~~'batch' means a defined quantity of finished products that meets the following conditions:~~

- ~~is produced in a single manufacturing process or a series of processes during the same manufacturing cycle;~~
- ~~is intended to have a uniform composition when tested in accordance with the same test methods; and~~
- ~~is clearly defined by a type number, batch number or other element allowing its identification.~~

**'model' means a type of detergents or surfactants all of whose units meet the following conditions:**

- **they have the same manufacturer and are placed on the market under the same trade name;**
- **they have the same composition, in accordance with the ingredients data sheet referred to in point 2.2.(e) of Module A of Annex IV and are manufactured using the same manufacturing processes;**
- **where applicable, they are subject to the same classification under Regulation (EC) No 1272/2008; and**
- **they are clearly defined by a type number or other element allowing their specific identification.**

(35) 'end-user' means any natural or legal person residing or established in the Union, to whom a detergent or surfactant has been made available either as a consumer outside of any trade, business, craft or profession or as a professional end-user in the course of its industrial or professional activities.

# CHAPTER II

# PRODUCT REQUIREMENTS

*Article 3*

**Making available on the market and f~~F~~ree movement**

1. Detergents and surfactants may only be **made available**~~placed~~ on the market if they comply with this Regulation.

2. Member States shall not prohibit, restrict or impede the **making available**~~placing~~ on the market of detergents or surfactants which comply with this Regulation.

*Article 4*

**Biodegradability**

1. ~~Detergents and~~ **S**~~s~~urfactants **and surfactants contained in detergents** shall comply with the biodegradability requirements laid down in Annex I**(A)**.

2. Paragraph 1 shall not apply to ~~the following:~~**surfactants that are active substances within the meaning of Article 3(1), point (c), of Regulation (EU) No 528/2012 and that are used as disinfectants where they meet any of the following conditions:**

~~(a) surfactants that are active substances within the meaning of Article 3(1), point (c), of Regulation (EU) No 528/2012 and that are used as disinfectants where they meet any of the following conditions:~~

(**aa**~~i~~) the surfactants are included in the Union list of approved active substances as laid down in Article 9(2) of Regulation (EU) No 528/2012;

(**ab**~~ii~~) the surfactants are included in the review programme as set out in Commission Delegated Regulation (EU) No 1062/2014[14];

~~(b) surfactants that are constituents of biocidal products authorised in accordance with Regulation (EU) No 528/2012;~~

(c) surfactants that are constituents of biocidal products and which may be made available on the market or used in accordance with Article ~~89(2)~~**55** of Regulation (EU) No 528/2012.

**3. Polymers used to encapsulate detergents placed on the market from two years after the adoption of the delegated act referred to in Article 26(6a), first subparagraph, shall comply with the biodegradibility requirements laid down in Annex I(B)**

**4. Other organic ingredients contained in detergents placed on the market from two years after the adoption of the delegated act referred to in Article 26(6a), second subparagraph, shall comply with the biodegradability requirements laid down in Annex I(C).**

[14] Commission Delegated Regulation (EU) No 1062/2014 of 4 August 2014 on the work programme for the systematic examination of all existing active substances contained in biocidal products referred to in Regulation (EU) No 528/2012 of the European Parliament and of the Council (OJ L 294, 10.10.2014, p. 1).

*Article 5*

**Detergents containing micro-organisms**

Detergents containing micro-organisms shall comply with the requirements laid down in Annex II.

*Article 6*

**Limitations on the content of phosphates and other phosphorus compounds**

Detergents listed in Annex III shall comply with the limitations on the content of phosphates and other phosphorus compounds laid down in that Annex.

# CHAPTER III

# OBLIGATIONS OF ECONOMIC OPERATORS

*Article 7*

**Obligations of manufacturers**

1. When placing detergents or surfactants on the market, manufacturers shall ensure that those detergents or surfactants have been designed and manufactured in accordance with this Regulation.

2. Manufacturers shall draw up the technical documentation referred to in Annex IV and carry out the conformity assessment procedure referred to in that Annex.

Where compliance of a detergent or surfactant with the applicable requirements has been demonstrated by the procedure referred to in the first subparagraph, manufacturers shall **before placing the product on the market**:

(a) create a **digital** product passport in accordance with Article 18,

(b) ensure that the data carrier is printed or otherwise placed on the label or on the packaging of the detergent or surfactant in a visible and legible manner in accordance with Article 18(3),

~~(c) where relevant, affix the CE marking in accordance with Article 14,~~

(d) ~~before placing detergents or surfactants on the market, manufacturers shall~~ include a reference of the **digital** product passport in the registry referred to in Article 20(1).

3. Manufacturers shall keep the technical documentation and the **digital** product passport **at the disposal of national market surveillance authorities** for 10 years after the detergent or the surfactant ~~covered by that documentation or product passport~~ has been placed on the market.

4. Manufacturers shall ensure that procedures are in place for series production to remain in conformity. Changes in product design or characteristics and changes in the test methods by reference to which conformity of a product is declared shall be adequately taken into account.

When deemed appropriate with regard to ~~the performance of, or~~ the risks presented by, a detergent or surfactant, manufacturers shall carry out sample testing of such detergents or surfactants, investigate, and, if necessary, keep a register of complaints, of non-conforming detergents or surfactants and recalls of such detergent or surfactants, and shall keep distributors informed of any such monitoring.

5. Manufacturers placing on the market detergents or surfactants shall ensure that they comply with the labelling requirements laid down in Articles 15, 16 and 17.

6. **Manufacturers placing on the market detergents or surfactants for which there is no obligation to provide information in accordance with Article 45 of Regulation (EC) No 1272/2008, shall provide to Member States' appointed bodies referred to in that Article, the ingredients data sheet referred to in point 2.2 (e) of Annex IV in the following cases:**

**(a) upon request from the Member States' appointed bodies;**

**(b) when the detergent or surfactant for which an ingredients data sheet has already been requested no longer corresponds to the information included in that data sheet.**

**This is without prejudice to the right of a Member State to request that such a data sheet be made available to an appointed body to which the Member State has assigned the task of providing this information to medical personnel.**

**The ingredients data sheet shall be transmitted using the format and submission tool determined by the appointed bodies requesting it.**

**6a. The information included in the data sheet referred to in paragraph 6 shall be kept confidential by the appointed bodies and by medical personnel and may only be used:**

**(a) to meet medical demand by formulating preventative and curative measures, in particular in the event of an emergency; or**

**(b) where requested by a Member State, the Commission or the Agency established by Regulation (EC) No 1907/2006, to undertake a statistical analysis to identify where improved risk management measures may be needed.**

~~Manufacturers placing on the market detergents that do not meet the criteria for classification as hazardous within the meaning of Regulation (EC) No 1272/2008, shall provide to Member States' appointed bodies referred to in Article 45 of that Regulation, the ingredient datasheet referred to in point 2.2 (e) of Annex IV.~~

~~Manufacturers shall provide the ingredient data sheet to the Member States' appointed bodies referred to in the first subparagraph in the following cases:~~

~~(a) upon request from the Member States' appointed bodies;~~

~~(b) when the detergent for which a data sheet has already been requested no longer corresponds to the information included in that datasheet.~~

~~The appointed body referred to in the first subparagraph and the medical personnel to which the information contained in the datasheet has been provided shall keep it confidential and use it for medical purposes only.~~

**6a. Where the manufacturer is not established in the Union, the detergent or surfactant may only be placed on the Union market if the manufacturer appoints an authorised representative in accordance with Article 8. In such cases, the manufacturers shall provide their authorised representative with all information and documentation necessary to demonstrate the conformity of the detergent or surfactant with the requirements laid down in this Regulation.**

**The first subparagraph shall not apply to detergents or surfactants placed on the market by an importer. In such cases, the manufacturers shall provide the importer of their detergent or surfactant with all information and documentation necessary to demonstrate the conformity of the detergent or surfactant with the requirements laid down in this Regulation.**

7. Manufacturers that consider or have reason to believe that a detergent or surfactant which they have placed on the market is not in conformity with this Regulation shall immediately take the corrective measures necessary to bring that detergent or surfactant into conformity, to withdraw it or to recall it, as appropriate. Furthermore, where manufacturers consider or have reason to believe that a detergent or surfactant which they have placed on the market presents a risk to health or to the environment, they shall immediately inform the competent national authorities of the Member States in which they made the detergent or surfactant available on the market to that effect, giving details, in particular, of any non-compliance and of any corrective measures taken.

8. Manufacturers shall, further to a ~~reasoned~~ request from a competent national authority, provide it with all the information and documentation, in paper or electronic form, necessary to demonstrate the conformity of the detergent or surfactant with this Regulation, in a language which can be easily understood by that authority. They shall cooperate with that authority, at its request, on any action taken to eliminate the risks posed by a detergent or surfactant which they have placed on the market.

*Article 8*

**Authorised representative**

1. Manufacturers **established outside the Union** ~~may~~ **placing detergents or surfactants on the market without an importer shall**, by a written mandate, appoint an authorised representative **who shall accept in writing**. **The authorised representative shall provide a copy of the mandate to the competent authority, upon request.**

~~2. Where the manufacturer is not established in the Union, the detergent or surfactant may only be placed on the Union market if the manufacturer designates, by a written mandate, an authorised representative.~~

3. **The**~~An~~ authorised representative shall **perform the tasks specified in the mandate received from the manufacturer. The mandate shall require, and the manufacturer shall enable, the authorised representive to do at least the following:** ~~perform the tasks specified in the mandate received from the manufacturer. The authorised representative shall provide a copy of the mandate to the competent authority, upon request.~~

~~The mandate shall allow the authorised representative to do at least the following:~~

(a) verify that the **digital** product passport has been created in accordance with Article 7(2), point (a), **that the relevant information on the digital product passport has been included in the registry referred to in Article 20(1),** that the technical documentation has been drawn up and the conformity assessment procedure has been carried out by the manufacturer in accordance with Article 7(2);

**(aa) verify that the information and technical documentation provided by the manufacturer in accordance with Article 7(6a) demonstrate *prima facie* conformity with the requirements laid down in this Regulation;**

**(ab) provide the ingredients data sheet under the conditions set out in Article 7(6);**

**(ac) ensure that detergents and surfactants that they are appointed for comply with the labelling requirements laid down in Articles 15, 16 and 17.**

(b) keep the **digital** product passport and technical documentation at the disposal of national market surveillance authorities for 10 years after the detergent or surfactant covered by those documents has been placed on the market;

(c) further to a ~~reasoned~~ request from a competent national authority, provide that authority with all the information and documentation necessary to demonstrate the conformity of the detergent or surfactant with the requirements laid down in this Regulation;

**(ca) when having reason to believe that a detergent or surfactant covered by the authorised representative's mandate presents a risk, inform the manufacturer and the market surveillance authorities thereof;**

(d) cooperate with the competent national authorities, at their request, on any action taken to eliminate the risks posed by a detergent or surfactant covered by the authorised representative's mandate**; and**

(e) terminate the mandate **and inform the competent national authorities thereof** if the manufacturer does not comply with the obligations of the manufacturer under this Regulation **or does not provide the necessary information and documentation demonstrating that the detergent or the surfactant he is appointed for fulfils the requirements laid down in this Regulation** .

4. The obligations laid down in Article 7(1) and the obligation to draw up technical documentation referred to in Article 7(2) shall not form part of the authorised representative's mandate.

*Article 9*

**Obligations of importers**

1. Importers shall place only compliant detergents or surfactants on the market.

2. Before placing a detergent or surfactant on the market importers shall ensure the following:

   (a) the manufacturer has carried out the conformity assessment procedure and drawn up the technical documentation referred to in Article 7(2);

   **(aa) the information and technical documentation provided by the manufacturer in accordance with Article 7(6a) demonstrate conformity with the requirements laid down in this Regulation;**

   ~~(b) the detergent bears the CE marking referred to in Article 14;~~

   (c) the manufacturer has created the **digital** product passport referred to in Article 7(2)**(a) and the data carrier is printed or otherwise placed on the label of the detergent or surfactant in the conditions set out in Article 7(2)(b)**; **and**

   (d) the relevant information on the **digital** product passport has been included in the registry referred to in Article 20(1);

3. Where an importer considers or has reason to believe that a detergent or surfactant is not in conformity with this Regulation, the importer shall not place the detergent or surfactant on the market until it has been brought into conformity. Furthermore, where the detergent or surfactant presents a risk to health or to the environment, the importer shall inform the manufacturer and the market surveillance authorities to that effect.

~~4. Importers shall indicate their name, registered trade name or registered trade mark and the postal and email address at which they can be contacted on the label of the detergent or surfactant. The contact details shall be in a language easily understood by end-users and market surveillance authorities.~~

5. Importers shall ensure that detergents and surfactants that they place on the market comply with the labelling requirements laid down in Articles 15, 16 and 17.

6. Importers shall ensure that, while a detergent or surfactant is under their responsibility, its storage or transport conditions do not jeopardise its compliance with this Regulation.

7. When deemed appropriate with regard to the **risks presented by**~~performance of~~ a detergent or surfactant ~~or the risks presented by them~~, importers shall carry out sample testing of such detergents and surfactants, investigate, and~~, if necessary,~~ keep a register of complaints, of non-conforming detergents and surfactants and recalls of such detergents and surfactants, and shall keep distributors informed of any such monitoring.

8. Importers that consider or have reason to believe that a detergent or surfactant which they have placed on the market is not in conformity with this Regulation shall immediately take the corrective measures necessary to bring that detergent or surfactant into conformity, to withdraw it or to recall it, as appropriate. Furthermore, where importers consider or have reason to believe that a detergent or surfactant which they have placed on the market presents a risk to health or the environment, they shall immediately inform the competent national authorities of the Member States in which they made the detergent or surfactant available on the market to that effect, giving details, in particular, of any non-compliance and of any corrective measures taken.

9. Importers shall keep the reference to the unique product identifier **and the technical documentation referred to in Article 7(2)** at the disposal of the market surveillance authorities for a period of 10 years after the detergent or surfactant has been placed on the market and shall **provide**~~ensure that the technical documentation can be made available to those authorities, upon request~~ **the ingredients data sheet under the conditions laid down in Article 7(6).**

10. Importers shall, further to a ~~reasoned~~ request from a competent national authority, provide it with all the information and documentation, in paper or electronic form, necessary to demonstrate the conformity of the detergent or surfactant with this Regulation in a language which can be easily understood by that authority. They shall cooperate with that authority, at its request, on any action taken to eliminate the risks posed by a detergent or surfactant which they have placed on the market.

*Article 10*

**Obligations of distributors**

1. When making a detergent or surfactant available on the market distributors shall act with due care in relation to the requirements of this Regulation.

2. Before making a detergent or surfactant available on the market distributors shall verify that the following conditions have been met:

   (a) the detergent or surfactant is accompanied by the required documents and by a label that meets the requirements laid down in Articles 15, 16 and 17;

   ~~(b) the detergent bears the CE marking referred to in Article 14;~~

   **(ba) the data carrier is printed or otherwise placed on the label of the detergent or surfactant in the conditions set out in Article 7(2)(b).**

   ~~(c) the manufacturer has complied with the requirements set out in Article 7(2) and (3) or, as applicable, the importer has complied with the requirements set out in Article 9(2).~~

3. Where a distributor considers or has reason to believe that a detergent or surfactant is not in conformity with this Regulation, the distributor shall not make the detergent or surfactant available on the market until it has been brought into conformity. Furthermore, where the detergent or surfactant presents a risk to health or the environment, the distributor shall inform the manufacturer and, where relevant, the authorised representative or the importer to that effect as well as the market surveillance authorities.

4. Distributors shall ensure that, while a detergent or surfactant is under their responsibility, its storage or transport conditions do not jeopardise its compliance with this Regulation.

5. Distributors that consider or have reason to believe that a detergent or a surfactant which they have made available on the market is not in conformity with this Regulation shall make sure that the corrective measures necessary to bring that detergent or surfactant into conformity, to withdraw it or to recall it, as appropriate, are taken. Furthermore, where distributors consider or have reason to believe that a detergent or surfactant which they have made available on the market presents a risk to health or to the environment, they shall immediately inform the competent national authorities of the Member States in which they made the detergent or surfactant available on the market to that effect, giving details, in particular, of any non-compliance and of any corrective measures taken.

6. Distributors shall, further to a ~~reasoned~~ request from a competent national authority, provide it with all the information and documentation, in paper or electronic form, necessary to demonstrate the conformity of the detergent or surfactant with this Regulation. They shall cooperate with that authority, at its request, on any action taken to eliminate the risks posed by detergents and surfactants which they have made available on the market.

*Article 11*

**Cases in which obligations of manufacturers apply to importers and distributors**

An importer or distributor shall be considered a manufacturer for the purposes of this Regulation and shall be subject to the obligations of the manufacturer under Article 7 where that importer or distributor places a detergent or surfactant on the market under his or her name or trademark or modifies a detergent or surfactant already placed on the market in such a way that compliance with this Regulation may be affected.

*Article 12*

**Packaging and repackaging by importers and distributors**

Where an importer or distributor packages or repackages a detergent or surfactant and is not subject to the obligations of the manufacturer pursuant to Article 11, that importer or distributor, as applicable, shall **in addition to his obligations under Article 9 or 10** have the following obligations:

(a) to ensure that the package bears his or her name, registered trade name or registered trade mark**,** ~~and~~ postal **and e-mail** address **at which he or she can be contacted,** preceded by the words 'packaged by' or 'repackaged by';

(b) to ensure compliance with Articles ~~14~~**15** to 17;

(c) to keep the reference to the unique product identifier **and the digital product passport** at the disposal of the market surveillance authorities for 10 years after ~~having made~~ the detergent or surfactant **has been placed**~~available~~ on the market.

**The making available of detergents or surfactants at refill stations is not considered as packaging nor repackaging for the purpose of this Article.**

*Article 13*

**Identification of economic operators**

1. Economic operators shall, on request, identify the following to the market surveillance authorities:

   (a) any economic operator who has supplied them with a detergent or a surfactant;

   (b) any economic operator to whom they have supplied a detergent or a surfactant.

2. Economic operators shall be able to provide the information referred to in paragraph 1 for 10 years after they have been supplied **for the last time** with the detergent or surfactant and for 10 years after they have supplied **for the last time** the detergent or surfactant.

# CHAPTER IV

# ~~CE MARKING AND~~ LABELLING

*~~Article 14~~*

**~~Rules and conditions for affixing the CE marking~~**

~~1. The CE marking shall be subject to the general principles set out in Article 30 of Regulation (EC) No 765/2008.~~

~~2. The CE marking shall be affixed visibly, legibly and indelibly before a detergent is placed on the market..~~

~~The CE marking shall be affixed either to the label or the packaging of a detergent or, where the detergent is supplied in bulk, to a document accompanying the detergent.~~

~~Where, in accordance with Article 16(2), economic operators may provide a digital label only, the CE marking shall be provided on the digital label.~~

~~3. Member States shall build upon existing mechanisms to ensure correct application of the regime governing the CE marking and shall take appropriate action in the event of improper use of that marking.~~

*Article 15*

**General labelling requirements**

1. Detergents and surfactants that are made available on the market in individual packaging or in a refill format shall be accompanied by a label.

2. An economic operator making a detergent **or surfactant** available on the market directly to an end-user in a refill format shall provide the physical label ~~or the data carrier through which the digital label is accessible~~ to the end-user **and shall ensure that the physical label is affixed on every packaging that is refilled with a detergent or surfactant**.

3. The label of detergents and surfactants shall contain the following information:

   (a) a type number~~,~~ batch number or other element allowing their identification;

   (b) the manufacturer's **and, where applicable, the authorized representative's or the importer's** name, registered trade name or registered trade mark and the postal and email address at which they can be contacted. The postal address shall indicate a single point **in the Union** at which the**y** ~~manufacturer~~ can be contacted;

   (c) the name and trade name of the product;

   (d) the content of the detergent or surfactant in accordance with part A of Annex V;

   (e) instructions for use and special precautions, where necessary and relevant. **Industrial and institutional detergents shall bear a statement indicating that the product is only for professional use and may not be sold to consumers;**

   **(f) the data carrier referred to in Article 18(2)(h) and 18(3).**

   **For detergents and surfactants transported in bulk, t**~~T~~he information referred to in points (a), (b) and (c) of the first subparagraph shall appear on **transportation containers as well as on** all documents accompanying **them**~~detergents and surfactants transported in bulk~~.

4. In addition to the information referred to in paragraph 3, the label of consumer laundry detergents**,** ~~and~~ consumer automatic dishwasher detergents **and consumer detergents for surfaces** shall contain dosage information in accordance with part B of Annex V.

5. The information referred to in paragraphs 3 and 4 shall be **written** in **the official**~~a~~ language**(s) of** ~~which can be easily understood by end-users, as determined by~~ the Member State**(s)** **where the detergent or surfactant is made available on the market, unless the Member State(s) concerned provide(s) otherwise**~~concerned~~, and shall be **legible,** clear, understandable and intelligible. The label shall be accessible for inspection purposes where the detergent or surfactant is made available on the market.

*Article 16*

**Forms of labelling**

1. Where detergents or surfactants are made available on the market, they shall be accompanied by the label elements set out in Article 15(3) and, where applicable, Article 15(4) in the following form:

   (a) on a physical label;

   **or**

   (b) on a digital label and duplicated on a physical label.

   By way of derogation from point (b) of the first subparagraph, the labelling elements set out in part C of Annex V do not have to be duplicated on the physical label. In addition, where the dosage information for consumer laundry detergents in accordance with points 1 and 2 of part B of Annex V is provided on the digital label, a simplified dosage grid as set out in part D of Annex V may be provided on the physical label.

2. ~~By way of derogation from paragraph 1, where detergents are made available on the market directly to an end-user in a refill format, the label elements set out in Article 15(3) and (4) may be provided in a digital label only, with the exception of dosage information for consumer laundry detergents as set out in point 1 and 2 of part B of Annex V, which needs to be provided also on a physical label.~~ **All the labelling elements corresponding to the detergent or surfactant supplied at a refill station shall be visibly and legibly displayed ~~mentioned~~ on the refill station.**

*Article 17*

**Requirements for digital labelling**

1. Where detergents and surfactants carry a digital label in accordance with Article 16, the following rules shall apply to that label:

(a) all label elements referred to in Article 15(3) and, where applicable, Article 15(4) shall be provided **together** in one place and separated from other information;

(b) the information on the digital label shall be searchable;

(c) the information on the digital label shall be accessible to all users in the Union;

(d) the digital label shall be accessible free of charge, without the need **to register** ~~for prior registration~~, download or instal~~lation of~~ applications, or to provide a password;

(e) the information on the digital label shall be presented in a way that **also** addresses the needs of vulnerable groups and supports, as relevant, the necessary adaptations to facilitate access to the information by those groups;

(f) the digital label shall be accessible through digital technologies widely used and compatible with all major operating systems and browsers;

(g) **the digital label shall be available in the official language(s) of the Member State(s) where the detergent or surfactant is made available on the market, unless the Member State(s) concerned provide(s) otherwise** ~~**in the language or languages of the country where the product is made available on the marketof purchase;**~~ when the **information on the** digital label is **accessible**~~available~~ in more than one language, the choice of language shall not be conditioned **by**~~on~~ the geographical location **from where it is** ~~**when**~~ **accessed by the end-user**~~of the end-user~~;

(h) the digital label shall remain available for a period of 10 years from the moment the detergent or surfactant **concerned** is placed on the market, also in cases of an insolvency, a liquidation or a cessation of activity in the Union of the economic operator that created it, or for a longer period as required under other Union legislation covering the information that it contains;

(i) the information on the digital label shall be accessible via the data carrier **referred to in Article 18(2)(h) and 18(3).**

2. The data carrier shall be physically present on the **physical label or packaging of** detergent**s and** ~~or~~ surfactant**s and, when they are transported in bulk**, ~~their packaging or~~**on the transportation containers and on** the documentation accompanying them. **It shall be clearly visible and indelible.**

In addition to the requirement in the first subparagraph, where detergents and surfactants are made available on the market in a refill format, the data carrier shall be present on the refill station **and on the physical label**.

The data carrier shall be clearly visible to the end-user before any purchase and to market surveillance authorities~~, including, where applicable, in cases where the detergent or surfactant is made available through distance sales.~~**, including, where applicable, in cases where the detergent or surfactant is made available through distance sales.**

3. Where economic operators provide a digital label, the data carrier shall be accompanied by the statement 'More comprehensive information on the product is available online' or by a similar statement.

4. Economic operators providing a digital label shall not track, analyse or use any usage information for purposes other than what is absolutely necessary for providing the information on the digital label online. **In particular, that usage information shall not be used for targeted advertising, shared with third parties or collected or stored as personal data.**

5. Economic operators ~~providing a digital label~~**making a detergent or surfactant available to end-users** shall provide the information present in the digital label by other means in any of the following cases:

(a) upon oral or written request by the end-user;

(b) when the digital label is temporarily unavailable, including at the time of purchase.

Economic operators shall provide the information referred to in the first subparagraph independently from a purchase of a detergent or surfactant**, without delay** and free of charge.

***Article 17a***

**Distance sales**

**When detergents or surfactants are made available on the market through distance sales, the offer shall clearly and visibly indicate the label elements referred to in Article 15.**

*Article 17b*

**Supply in refill format**

**Without prejudice to the provisions of Regulation (EU) No 2023/988 on general product safety[15] and of Regulation (EU) .../... [Regulation on packaging and packaging waste] as regards safety and hygiene requirements for refill including the risk of confusion with foodstuff, when detergents or surfactants are made available on the market in refill format, the economic operator offering the refill shall ensure that the following conditions are met:**

**a) risk mitigation measures are applied to minimise the exposure of humans, especially of children, and of the environment;**

**b) measures are taken to prevent uncontrolled use of the refill station by children;**

**c) at the moment of refill, the supplier is available on site for maintenance and immediate assistance, including emergency assistance;**

**d) refill stations can be operated outdoors and outside business hours only if immediate assistance can be provided;**

**e) the substances or mixtures provided through a refill station do not react with each other in a way that could endanger clients or staff; and**

**f) staff of the supplier are appropriately trained to minimise safety risks to consumers, professional users and themselves.**

---

15 **Regulation (EU) 2023/988 of the European Parliament and of the Council of 10 May 2023 on general product safety, amending Regulation (EU) No 1025/2012 of the European Parliament and of the Council and Directive (EU) 2020/1828 of the European Parliament and the Council, and repealing Directive 2001/95/EC of the European Parliament and of the Council and Council Directive 87/357/EEC (OJ L 135, 23.5.2023, p).**

# CHAPTER V
# DIGITAL PRODUCT PASSPORT

*Article 18*

**Digital Product passport**

1. Before placing a detergent or surfactant on the market, **the** manufacturer~~s~~ shall create a **digital** product passport for those products. The ~~-~~**digital** product passport ~~-~~shall meet the requirements laid down in this Article and Article 19.

2. The **digital** product passport shall ~~meet the following requirements~~:

   (a) ~~it shall~~ correspond to a specific **model** ~~batch~~ of ~~the~~ detergent or surfactant;

   (b) ~~it shall~~ state that compliance of the detergent or surfactant with the requirements set out in this Regulation has been demonstrated, and, where relevant, indicate the test methods used;

   (c) ~~it shall~~ contain at least the ~~information included~~ **data set out** in Annex VI;

   (d) ~~it shall~~ be **acurate, complete and** up-to date;

   (e) ~~it shall~~ be available in the language or languages required by the Member State where the detergent or surfactant ~~is placed or~~ **is** made available on the market;

   (f) ~~it shall~~ be accessible to **consumers or other** end-users, market surveillance authorities, customs authorities, the Commission and other economic operators;

   (g) ~~it shall~~ be available for a period of 10 years after the detergent or surfactant is placed on the market, also in cases of an insolvency, a liquidation or a cessation of activity in the Union of the economic operator that created the **digital** product passport;

(h) ~~it shall~~ be **connected** ~~accessible~~ through a data carrier **to a persistent unique product identifier;**

(i) ~~it shall~~ fulfil the specific and technical requirements laid down pursuant to paragraph ~~8~~**9**.

3. The data carrier shall be physically present on the detergent or surfactant, **their label,** their packaging or the documentation accompanying **the detergent or surfactant**~~them~~, in accordance with the implementing act referred to in paragraph **9**~~8~~.

In addition to the requirement in the first subparagraph, where detergents and surfactants are made available on the market in a refill format, the data carrier shall be present on the refill station.

The data carrier shall be clearly visible to the **consumer or other** end-user**s** before any purchase and to market surveillance authorities, including, where applicable, in cases where the detergent or surfactant is made available through distance sales.

4. ~~Where economic operators provide a digital label, a single data carrier shall be used to access the product passport and the digital label.~~

**4a. The data carrier shall be accompanied by the statement 'More comprehensive information on the product is available online' or by a similar statement.**

5. Where other Union **law**~~legislation~~ requires information on the detergent or surfactant to be available via a data carrier, a single data carrier shall be used to provide the information required under this Regulation and the other Union **law**~~legislation~~.

6. Where other Union **law**~~legislation~~ applying to detergents and surfactants requires a **digital** product passport, a single product passport shall be created for detergents and surfactants, containing the **data**~~information~~ set out in paragraph 2 as well as any other **data**~~information~~ required for the **digital** product passport-by that other Union **law**~~legislation~~.

**By way of derogation from paragraph 2, point (a), where that lawrequires that the digital product passport corresponds to a batch or an item level, the digital product passport for the purposes of this Regulation can be issued to that level.**

7. Economic operators may, in addition to the **data** ~~information~~ referred to in paragraphs 5 and 6, make other information accessible through the data carrier referred to in paragraph 6. Where this is the case, that information shall be clearly separated from the information required under this Regulation and, where relevant, under other Union **law**~~legislation~~.

8. By creating the **digital** product passport, the manufacturer shall assume the responsibility for the compliance of the detergent or surfactant with this Regulation.

9. The Commission shall adopt an implementing act determining the specific and technical requirements related to-the **digital** product passport-for detergents and surfactants. Those requirements shall set out at least the following:

(a) ~~the types of~~**one or more** data carrier**s** to be used;

(b) the layout in which the data carrier ~~shall~~ **is to** be presented and its positioning;

(c) the technical elements of the passport for which defined European or international standards ~~shall~~ **are to** be used;

(d) ~~the actors that may introduce or update the information in the product passport, including where needed the creation of a new product passport, including manufacturers, competent national authorities, and the Commission, or any organisation acting on their behalf, and the types of information they may introduce or update;~~ **the actors that ~~to~~ are to have access to data in the digital product passport and to what data they are to have access.**

**(e) the actors that are to create a digital product passport or update the data in a digital product passport, and what data they may introduce or update. ; and**

**(f) the detailed arrangementsfor introducing~~modalities to introduce~~ or updating data referred to in point (e).**

**Those implementing acts shall be adopted in accordance with the examination procedure referred to in Article 28(2).**

**9a.** **Except where they act on behalf of the manufacturer, the actors that update data in the digital product passport shall be responsible for the accuracy of the data they provide.**

**10.** **The economic operator placing the detergent or surfactants on the market shall:**

**(a) provide distributors and providers of online marketplaces with a digital copy of the data carrier or the unique product identifier, as relevant, to allow them to make the data carrier or the unique product identifier accessible to potential customers where they cannot physically access the product.**

**(b) provide the digital copy reffered to in point (a) or a webpage link free of charge promptly and in any event within 5 working days of receiving a request to do so.**

**11.** **Economic operators, when placing the detergent or surfactant on the market, shall also make available a back-up copy of the digital product passport through adigital product passport service provider.**

~~Those implementing acts shall be adopted in accordance with the examination procedure referred to in Article 28(2).~~

*Article 19*

**Technical design and operation of the digital product passport**

The technical design and operation of the **digital** product passport shall comply with the following requirements:

(a) **the digital** product passport~~s created under this Regulation~~ shall be fully interoperable with **other digital** product passports required by other Union ~~legislation~~ **law** in relation to the technical, semantic and organisational aspects of end-to-end communication and data transfer;

(b) all ~~information~~ **data** included in the **digital** product passport shall be based on open standards developed with an interoperable format and shall be**, as appropriate,** machine readable, structured ~~and~~ searchable **and**~~e;~~ **transferable through an open interoperable data exchange network without vendor lock-in;**

(c) **consumer or other** end-users, economic operators**, competent national authorities and custom authorities, civil society organisations, researchers, trade unions, and the Commission, or any organisation acting on their behalf** ~~and other relevant actors~~ shall have **free of charge and easy access** ~~access~~ to the **digital** product passport **based on their respective access rights set out in the applicable implementing act referred to in Article 18(9);**

(d) the ~~data included in the~~ **digital** product passport shall be stored by the economic operator responsible for its creation or by ~~operators authorised to act on their behalf~~ **digital product passport service providers;**

**(da) Where a new digital product passport is created for a detergent or a surfactant that already has a digital product passport, the new digital product passport shall be linked to the original digital product passport or passports.**

(e) if the ~~data included in~~ the **digital** product passport is stored **pursuant to point (d) of this Article** or otherwise processed by **digital product passport service providers pursuant to Article 18(11), those** ~~operators authorised to act on behalf of economic operators placing the detergent or surfactant on the market,~~**digital product passport service providers** shall not ~~be allowed to~~ sell, re-use or process such data, in whole or in part, beyond what is necessary for the provision of the relevant storing or processing services **unless specifically agreed with the economic operator placing the detergent or surfactant on the market**;

(f) economic operators may not track, analyse or use any usage information for purposes other than what is absolutely necessary for providing the information on-the **digital** product passport online**. In particular, personal data related to the customer of the detergent or surfactant shall not be stored in the digital product passport without the explicit consent of the consumer or other end-user in compliance with Article 6 of Regulation (EU) 2016/679**[16];

**(g) data authentication, reliability and integrity shall be ensured;**

**(h) digital product passports shall be designed and operated so that a high level of security and privacy is ensured and fraud is avoided.**

[16] **Regulation (EU) 2016/679 of the European Parliament and of the Council of 27 April 2016 on the protection of natural persons with regard to the processing of personal data and on the free movement of such data, and repealing Directive 95/46/EC (General Data Protection Regulation), OJ L 119, 4.5.2016, p. 1.**

***Article 19a***

**Web portal for data in the digital product passport**

**The Commission shall ensure that stakeholders can search for and compare information in line with their respective access rights pursuant to the implementing act referred to in Article 18(9) of this Regulation via the web portal referred to in Article 14 of the Regulation (EU) …/… on Ecodesign for Sustainable Products.**

*Article 20*

**Digital p~~P~~roduct passport registry**

1. Before placing a detergent or surfactant on the market, **the** economic operator~~s~~ **placing the detergent or surfactant on the market** shall upload, in the registry established under Article 1**3**~~2~~(1) of Regulation (EU) …/… on **[**Ecodesign for Sustainable Products**] ("the registry")** the unique product identifier and the unique operator identifier for the detergent or surfactant. **In case of detergents or surfactants intended to be placed under the customs procedure 'release for free circulation', the registry shall store the commodity code of the detergent or surfactant.**

**1a. Upon the uploading by the economic operator of the data referred to in paragraph 1 in the registry, the registry shall automatically communicate to thateconomic operator a unique registration identifier associated to the identifiers uploaded in the registry for a specific detergent or surfactant. That communication by the registry shall not be deemed to be proof of compliance with this Regulation or other Union law.**

**The Commission may adopt an implementing act specifying the implementation arrangements for the registry , including for the communication of the unique registration identifier referred to in the first subparagraph. This implementing act shall be adopted in accordance with the examination procedure referred to in Article 28(2).**

2. The Commission, ~~the market surveillance~~**national competent** authorities and ~~the~~ customs authorities shall have access to the registry ~~referred to in paragraph 1~~ for **the purpose of** carrying out their duties pursuant to this Regulation.

*Article 21*

**Customs controls relating to the digital product passport**

1. Detergents and surfactants entering the Union market shall be subject to verifications and other measures laid down in this Article. **This Article is without prejudice to any other Union legal acts, in particular Regulation (EU) 952/2013 and Chapter VII of Regulation (EU) 2019/1020.**

2. **Any person intending to place a detergent or surfactant under the customs procedure 'release for free circulation' shall provide or make available to customs authorities the unique registration identifier as referred to in Article 20(1a).**

   **The first subparagraph of this paragraph shall apply from the moment the registry is operational.** ~~Declarants as defined in Article 5, point (15), of Regulation (EU) 952/2013 shall include the unique product identifier in the customs declaration for release for free circulation of any detergent or surfactant.~~

3. **Customs authorities may release a detergent or surfactant for free circulation only after having verified as a minimum that the unique registration identifier and the commodity code provided or made available to them corresponds to the data stored in the registry. The release for free circulation shall not be deemed to be proof of compliance with this regulation or any other Union law.**

**3a. The verification referred to in the paragraph 3 shall take place electronically and automatically via the interconnection between the registry and the EU Customs Single Window Certificates Exchange System referred to in Article 15(3) of [P.O. insert the serial number for Regulation (EU) …/… on Ecodesign Requirements for Sustainable Products]. This paragraph shall apply as from the moment that interconnection is operational.**

~~Customs authorities shall verify whether the unique product identifier indicated by the declarant in accordance with paragraph 2 of this Article matches a unique product identifier included in the registry in accordance with Article 20(1).~~

4. **Customs authorities and the Commission may retrieve and use the data on the detergent or surfactant included in the digital product passport and the registry for carrying out their duties pursuant to Union law, including risk management, customs controls and release for free circulation in accordance with Regulation (EU) No 952/2013.** ~~In addition to the verification referred to in paragraph 3, customs authorities shall verify the consistency of information made available to customs by declarants with other information stored in the registry referred to in Article 20(1) listed in the delegated act referred to in Article 26(3).~~

5. **The verifications and other measures laid down in this Article shall be carried out on the basis of the list of commodity codes and product description set out in Annex VIa.** ~~The verifications referred to in paragraph 3 and 4 shall take place electronically and automatically before the release for free circulation.~~

~~6. For the purpose of paragraphs 3 to 5, the interconnection between the registry referred to in Article 20(1) and the EU Customs Single Window Certificates Exchange System referred to in [Article 13 of Regulation (EU) …/… on Ecodesign for Sustainable Products] shall be used.~~

~~7. Paragraphs 3, 4 and 5 shall apply from the day when the interconnection between the registry and the EU Customs Single Window Certificates Exchange System referred to in [Article 13 of Regulation (EU) …/… on Ecodesign for Sustainable Products] becomes operational.~~

~~The Commission shall publish a notice in the Official Journal of the European Union to that effect indicating the date when the interconnection becomes operational.~~

~~8. Customs authorities may retrieve and use the information included in the product passport and the registry referred to in Article 20(1) for carrying out their duties pursuant to Union legislation, including for risk management in accordance with Articles 46 and 47 of Regulation (EU) No 952/2013.~~

~~9. The verifications and other measures laid down in this Article shall be carried out on the basis of a list of Combined Nomenclature codes, as set out in Annex I to Regulation (EEC) No 2658/87, under which detergents and surfactants are classified as well as the product descriptions of those detergents and surfactants.~~

~~10. The verifications and measures laid down in this Article shall not affect the application of other Union legal acts governing the release for free circulation of products, including Articles 46, 47 and 134 of Regulation (EU) No 952/2013, as well as the controls referred to in Chapter VII of Regulation (EU) 2019/1020.~~

# CHAPTER VI

# MARKET SURVEILLANCE

*Article 22*

**Procedure at national level for market surveillance of~~dealing with~~ detergents and surfactants ~~presenting a risk~~**

1. ~~Where the m~~**M**arket surveillance authorities ~~of one Member State have sufficient reason to believe that a detergent or surfactant presents a risk to health or the environment, they shall~~ **may** carry out an evaluation in relation to **a**~~the~~ detergent or surfactant ~~concerned~~ covering ~~all relevant~~ requirements laid down in this Regulation. **T**he relevant economic operators shall cooperate as necessary with the market surveillance authorities for that purpose.

2. ~~Where the m~~**M**arket surveillance authorities ~~of one Member State have sufficient reason to believe that a test carried out in accordance with the methods listed in Annex I or Annex II has produced false results, they shall~~ **may** perform controls to verify the compliance of the detergent or surfactant with this Regulation in accordance with the reference methods set out in **the** Annexes ~~I, II and VII~~. ~~Economic operators shall not be obliged to pay for any repeat or additional test, provided that the initial test has shown compliance of detergents, or surfactants, with this Regulation.~~

3. Where, in the course of the controls referred to in paragraph 1 or paragraph 2, the market surveillance authorities find that the detergent or surfactant does not comply with the requirements laid down in this Regulation, they shall without delay require the relevant economic operators to take all appropriate corrective action to bring the detergent or surfactant into compliance with those requirements, to withdraw it from the market, or to recall it within a reasonable period which is commensurate with the nature of the risk referred to in paragraph 1.

4. Where the market surveillance authorities consider that non-compliance is not restricted to their national territory, they shall inform the Commission and the market surveillance authorities of other Member States of the results of the evaluation and of the actions which they have required the economic operator to take.

5. The economic operator shall ensure that all appropriate corrective action is taken in respect of all the concerned detergents or surfactants that the economic operator has made available on the market throughout the Union.

6. Where the relevant economic operator does not take adequate corrective action within the period referred to in paragraph 3, the market surveillance authorities shall take all appropriate provisional measures to prohibit or restrict making available on their national market of the detergent or surfactant, to withdraw the detergent or surfactant from that market or to recall it.

   The market surveillance authorities shall inform the Commission and the market surveillance authorities of other Member States, without delay, of those measures.

   The information referred to in the second subparagraph shall include all available details, in particular the data necessary for the identification of the non-compliant detergent or surfactant, the origin of that detergent or surfactant, the nature of the non-compliance alleged and the risk involved, the nature and duration of the national measures taken and the arguments put forward by the relevant economic operator.

7. Market surveillance authorities of Member States other than the Member State initiating the procedure under this Article shall without delay inform the Commission and the market surveillance authorities of other Member States of any measures adopted and of any additional information at their disposal relating to the non-compliance of the detergent or surfactant concerned, and, in the event of disagreement with the adopted national measure, of their objections.

8. Where, within three months of receipt of the information referred to in paragraph 6, second subparagraph, no objection has been raised by either a market surveillance authority or the Commission in respect of a provisional measure taken by a Member State, that measure shall be deemed justified.

9. Market surveillance authorities shall ensure that appropriate restrictive measures, such as withdrawal of the detergent or surfactant from the market, are taken in respect of the detergent or surfactant concerned without delay.

10. Where, for the purposes of paragraphs 4, 6, 7 and 8, information is communicated to the Commission or other market surveillance authorities that information shall be communicated through the information and communication system referred to in Article 34(1) of Regulation (EU) 2019/1020.

*Article 23*

**Union safeguard procedure**

1. Where, on completion of the procedure set out in Article 22(3)~~, (4) and (5)~~ **and (6)**, objections are raised against a measure taken by a market surveillance authority, or where the Commission considers a national measure to be contrary to Union **law** ~~legislation~~, the Commission shall without delay enter into consultation with the market surveillance authorities and the relevant economic operator or operators and shall evaluate the national measure. On the basis of the results of that evaluation, the Commission shall adopt an implementing act determining whether the national measure is justified or not.

**That implementing act shall be adopted in accordance with the examination procedure referred to in Article 28(2).**

The Commission shall address its decision to all Member States and shall **immediately** ~~without delay~~ communicate it to them and the relevant economic operator or operators.

2. If the national measure is considered justified, all Member States shall take the necessary measures to ensure that the non-compliant detergent or surfactant is withdrawn from their market, and shall inform the Commission accordingly.

3. If the national measure is considered unjustified, the Member State concerned shall withdraw that measure.

*Article 24*

**Compliant detergents and surfactants which present a risk to health or to the environment**

1. Where, having carried out an evaluation under Article 22(1), a market surveillance authority finds that although a detergent or surfactant is in compliance with this Regulation, it presents a risk to health or to the environment, it shall require the relevant economic operator to take all appropriate measures to ensure that the detergent or surfactant concerned, when placed on the market, no longer presents that risk, to withdraw the detergent or surfactant from the market or to recall it, within a reasonable period which is commensurate with the nature of that risk.

2. The economic operator shall ensure that corrective action is taken in respect of all the concerned detergents or surfactants that the economic operator has made available on the market throughout the Union.

3. The market surveillance authority shall immediately inform the Commission and the market surveillance authorities of the other Member States. That information shall include all available details, in particular the data necessary for the identification of the detergents or surfactants concerned, the origin and the supply chain of the detergent or surfactant, the nature of the risk involved and the nature and duration of the national measures taken.

4. The Commission shall without delay enter into consultation with the market surveillance authorities and the relevant economic operator or operators and shall evaluate the national measures taken. On the basis of the results of that evaluation, the Commission shall adopt an implementing act determining whether the national measure is justified or not and, where necessary, propose appropriate measures.

   **<u>That implementing act shall be adopted in accordance with the examination procedure referred to in Article 28(2).</u>**

   The Commission shall address its decision to all Member States and shall immediately communicate it to them and the relevant economic operator or operators.

*Article 25*

**Formal non-compliance**

1. Without prejudice to Article 22, where a market surveillance authority makes one of the following findings, it shall require the relevant economic operator to put an end to the non-compliance concerned:

   ~~(a) the CE marking has been affixed in violation of Article 14 or not affixed at all;~~

   (b) the product passport has not been drawn up in accordance with Articles 18 and 19;

   (c) the technical documentation referred to in Article 7(2) is either not available or incomplete;

   (d) the data carrier through which the **digital** product passport and, where relevant, the digital label is accessible is not present on the detergent or surfactant, their packaging, the documentation accompanying them or on the refill station, as applicable;

   (e) the label has not been provided**, or the label has not been provided in accordance with Articles 16 and 17,** or the labelling information referred to in Articles 15 and Annex V is false or incomplete;

   **(f) the ingredients data sheet has not been provided or updated in accordance with Article 7(6), Article 8(3), point (ab), or Article 9(9), as applicable;**

2. **a**Where the non-compliance referred to in paragraph 1 persists, the Member State concerned shall take all appropriate measures to restrict or prohibit the detergent or surfactant being made available on the market or ensure that it is recalled or withdrawn from the market.

# CHAPTER VII

# DELEGATED POWERS AND COMMITTEE PROCEDURE

*Article 26*

**Delegated powers**

**1a. The Commission is empowered to adopt delegated acts in accordance with Article 27 amending Annexes I to V and VII where necessary to adapt those annexes to technical and scientific progress. When drafting these acts, the Commission shall take into account any relevant European standards.**

1. The Commission is empowered to adopt delegated acts in accordance with Article 27 amending Annex VI, as regards the information to be provided in the **digital** product passport, for the purposes of adapting it to technical and scientific progress and to the level of digital readiness of market surveillance authorities and of end-users.

2. The Commission is empowered to adopt delegated acts in accordance with Article 27, amending Article 20(1) by requiring that additional information among the information listed in Annex VI be **uploaded into** ~~stored in~~ the registry.

When adopting the delegated acts in accordance with the first subparagraph, the Commission shall take into account the following criteria:

(a) coherence with other relevant Union acts where relevant;

(b) the need to allow for the verification of the authenticity of the **digital** product passport;

(c) the relevance of information for improving the efficiency and effectiveness of market surveillance checks and customs controls for detergents and surfactants;

**and**

(d) the need to avoid disproportionate administrative burden for economic operators **and authoritites**.

~~3. The Commission is empowered to adopt delegated acts in accordance with Article 27 supplementing this Regulation by determining additional information stored in the registry referred to in Article 20(1) that is to be controlled by customs authorities.~~

~~4. The Commission is empowered to adopt delegated acts in accordance with Article 27 amending this Regulation by providing an Annex containing a list of Combined Nomenclature codes, as set out in Annex I to Regulation (EEC) No 2658/87, and product descriptions of detergents and surfactants and by updating such Annex.~~

~~5. The Commission is empowered to adopt delegated acts in accordance with Article 27 amending Annexes I to VII to take into account scientific and technical progress.~~

6. **The Commission is empowered to adopt delegated acts in accordance with Article 27 amending Annex I and, where appropriate, Article 4 so as to:**

**a) amend the biodegradability requirements and corresponding test methods for surfactants or surfactants contained in detergents;**

**b) add or amend biodegradability requirements and corresponding test methods for other detergent ingredients, including polymers used to encapsulated detergents;**

**c) add or amend exceptions authorising the limited use in detergents of specific substances that do not comply with the biodegradability requirements laid down by Annex I, when duly justified.**

**The purpose of the delegated acts in the first subparagraph shall be to ensure a high level of protection of health and the environment. When adopting such delegated acts, the Commission shall take into account, alongside the impact on human health and the environment, the following factors: current manufacturing practices, the consequences for wastewater treatment plants, the availability of technically and economically feasible alternatives and impacts on small and medium-sized enterprises.**

**6a.** **By ... [3 years from the date of entry into force of this Regulation], The Commission shall exercise the power referred to in paragraph 6, first subparagraph, point (b), to add biodegradability criteria for polymers used to encapsulate detergents and appropriate standard assays in Annex I(B).**

**By… [5 years from the date of entry into force of this Regulation], the Commission shall exercise the power referred to in paragraph 6, first subparagraph, point (b), to add biodegradability requirements to any other organic ingredients contained in detergents and appropriate standard assays in Annex I(C).**

**6b.** **The Commission is empowered to adopt delegated acts in accordance with Article 27 amending Annex II in order to add a~~the~~ risk assessment methodology for detergents containing micro-organisms and to adapt this Annex to technical and scientific progress for the purpose of ensuring a high level of protection of health and the environment during the whole lifecycle of the product.**

**By ... [30 months from the date of entry into force of this Regulation], the Commission shall exercise the power referred to in the first subparagraph to amend Annex II by adding an appropriate methodology to assess and manage the risks posed by detergents containing micro-organisms, particularly when they are in spray format or destined to be used on food or surfaces in contact with food.**

7. Where individual risk-based concentration limits for fragrance allergens are **introduced or amended**~~established~~ in Regulation (EC) No 1223/2009 of the European Parliament and of the Council[17], the Commission shall adopt delegated acts in accordance with Article 27 amending Annex V in order to adapt **it to** the limit of the **fragrance** allergen**s**~~sic fragrances~~ listed in Annex III to that Regulation~~accordingly~~.

**7a. Where new fragrance allergens are listed in Annex II or Annex III of[18] of the European Parliament and of the Council, the Commission shall adopt delegated acts in accordance with Article 27 in order to add these fragrance allergens in the Appendix to Annex V.**

[17] Regulation (EC) No 1223/2009 of the European Parliament and of the Council of 30 November 2009 on cosmetic products (OJ L 342, 22.12.2009, p. 59).

[18] Regulation (EC) No 1223/2009 of the European Parliament and of the Council of 30 November 2009 on cosmetic products (OJ L 342, 22.12.2009, p. 59).

8. By [OP please insert the date = the first day of the month following 30 months after the date of entry into force of this Regulation], the Commission shall adopt delegated acts in accordance with Article 27 to supplement this Regulation, by determining the specific requirements for the digital labelling of detergents. Those requirements shall at least establish the types of IT solutions, which economic operators may use, and the alternative means for providing the information on the digital label, referred to in Article 17.

When adopting the delegated act referred to in the first subparagraph, the Commission shall take into account the following criteria:

**(aa) the need for the digital labelling not to compromise the safety of the end-users and the environment;**

(a) coherence with other relevant Union acts where relevant;

(b) the need to encourage innovation;

(c) technological neutrality characterised by absence of constraints or prescriptions on the choice of technology or equipment, within the bounds of compatibility and avoidance of interference;

~~(d) the need for the digital labelling not to compromise the safety of the end-users and the environment.~~

(e) the level of digital readiness among all population groups in the Union **as well as the readiness of the necessary wireless and other technological infrastructure allowing unrestricted access to the information on detergents and surfactants**..

9. The Commission is empowered to adopt delegated acts in accordance with Article 27 amending Annex V, as regards the labelling information, which economic operators are allowed to provide only digitally in accordance with Article 16**(1), second paragraph. Those delegated acts shall pursue**~~, for~~ the purposes of adapting ~~it~~**the Annex** to technical and scientific progress and to the level of digital readiness among the end-users of detergents. When adopting those delegated acts, the Commission shall take into account the need to ensure a high level of protection of health and environment.

**10. The Commission is empowered to adopt delegated acts in accordance with Article 27 amending Annex VIa to update the list of commodity codes, as set out in Annex I to Regulation (EEC) No 2658/87, and product descriptions of detergents and surfactants.**

*Article 27*

**Exercise of the delegation**

1. The power to adopt delegated acts is conferred on the Commission subject to the conditions laid down in this Article.

2. The power to adopt delegated acts referred to in Article 26 shall be conferred on the Commission for ~~an indeterminate period of time~~ **a period of five years from the date of entry into force of this Regulation. The Commission shall draw up a report in respect of the delegation of power not later than nine months before the end of the five-year period. The delegation of power shall be tacitly extended for periods of an identical duration, unless the European Parliament or the Council opposes such extension not later than three months before the end of each period**.

3. The delegation of power referred to in Article 26 may be revoked at any time by the European Parliament or by the Council. A decision to revoke shall put an end to the delegation of the power specified in that decision. It shall take effect the day following the publication of the decision in the *Official Journal of the European Union* or at a later date specified therein. It shall not affect the validity of any delegated acts already in force.

4. Before adopting a delegated act, the Commission shall consult experts designated by each Member State in accordance with the principles laid down in the Interinstitutional Agreement of 13 April 2016 on Better Law-Making.

5. As soon as it adopts a delegated act, the Commission shall notify it simultaneously to the European Parliament and to the Council.

6. A delegated act adopted pursuant to Article 26 shall enter into force only if no objection has been expressed either by the European Parliament or the Council within a period of two months of notification of that act to the European Parliament and the Council or if, before the expiry of that period, the European Parliament and the Council have both informed the Commission that they will not object. That period shall be extended by two months at the initiative of the European Parliament or the Council.

*Article 28*

**Committee procedure**

1. The Commission shall be assisted by the Committee on detergents. That committee shall be a committee within the meaning of Regulation (EU) No 182/2011.

2. Where reference is made to this paragraph, Article 5 of Regulation (EU) No 182/2011 shall apply.

# CHAPTER VIII

# TRANSITIONAL AND FINAL PROVISIONS

*Article 29*

**Penalties**

Member States shall lay down the rules on penalties applicable to infringements of this Regulation and shall take all measures necessary to ensure that they are implemented. The penalties provided for shall be effective, proportionate and dissuasive. Member States shall, without delay, notify the Commission of those measures and of any subsequent amendment affecting them.

~~*Article 30*~~

~~**Amendment of Regulation (EU) 2019/1020**~~

~~In Annex I of Regulation (EU) 2019/1020, point 15 is replaced by the following:~~

~~'15. Regulation (EU) …/… of the European Parliament and of the Council of … on the making available on the market of detergents and surfactants (OJ L …)'.~~

*Article 31*

**Report <u>and review</u>**

[~~*OP: please insert the date = 5 years from the date of application of this Regulation*~~], ~~the Commission shall submit to the European Parliament and to the Council a report on the application of this Regulation. The report shall contain an assessment of how this Regulation is achieving its objectives,including an assessment on the impact on small and medium-sized enterprises.~~

~~*Article 32*~~

~~**Micro-organisms rReview**~~

By [*OP: please insert the date = ~~3~~7 years from the date of* ***entry into force*** *~~application~~ of this Regulation*], the Commission shall assess the effectiveness and relevance of the requirements of this Regulation **and shall submit to the European Parliament and to the Council a report on the application of this Regulation. The report shall contain an assessment of how this Regulation is achieving its objectives and shall include at least** ~~for detergents containing micro-organisms as well as the possibility to include new micro-organisms or strains of micro-organisms allowed in detergents in Annex II. f~~ **the following elements:**

**i.** **As regards detergents containing micro-organisms, the list ~~possibility to include new~~ of micro-organisms or strains of micro-organisms allowed or banned in detergents in Annex II and the suitability of the other paragraphs of Annex II to ensure the safety of these products for health and the environment;**

**ii.** **As regards biodegradability, an assessment of biodegradability requirements for ingredients covered by Article 4 compared to the biodegradability of the detergent as a whole, as well as an assessment of whether it is necessary to ban certain ingredients and to strengthen the biodegradability requirements;**

**iii.** **As regards the protection of health and the environment from the most harmful substances and biocidal active substances, an assessment of the need to include or adapt provisions in this Regulation in respect of the presence of these substances in detergents and surfactants; this assessment shall take into account the interaction of this Regulation with other relevant Union law, and shall exclude biocidal active substances listed in Annex I of Regulation (CE) No 528/2012; and**

**iv.** **As regards detergents containing phosphates and other phosphorus compounds, the possibility to limit further the phosphorus content or add limitations of phosphorus content on other products categories to Annex III; this assessment should take into account the impact on the environment, the availability of suitable alternatives with less or no phosphorus and the socio-economic impact of substitution.**

*Article 33*

**Repeal of Regulation (EC) No 648/2004**

Regulation (EC) No 648/2004 is repealed.

References to the repealed Regulation shall be construed as references to this Regulation and read in accordance with the correlation table in Annex VIII.

*Article 34*

**Transitional provisions**

**1.** ~~Member States shall not impede the making available on the market of d~~**D**etergents and surfactants which are placed on the market before **…** [~~*OP: please insert the date =*~~ ***42***~~*30*~~ *months from the date of entry into force of this Regulation*] in conformity with Regulation (EC) No 648/2004 as applicable on … [~~*OP: please insert the date =*~~ *one day before* ~~*30*~~ ***42*** *months from the date of entry into force of this Regulation*] **may continue to be made available on the market indefinitely.**

**2.** Detergents and surfactants which, are placed on the market after **...** [~~*OP: please insert the date of application =*~~ *one day before* ~~*30*~~ ***42*** *months from the date of entry into force of this Regulation*] **and before [*54 months from the entry into force of this Regulation*]** and which ~~at the moment of their placing on the market comply with~~ **are in conformity with** Regulation (EC) No 648/2004 as applicable on **...** [~~*OP: please insert the date of application =*~~ *one day before* ~~*30*~~ ***42*** *months from the date of entry into force of this Regulation*], may be made available on the market until **...** [~~*OP: please insert the date =*~~ ***54***~~*36*~~ *months from the date of entry into force of this Regulation*].

*Article 35*

**Entry into force and application**

This Regulation shall enter into force on the twentieth day following that of its publication in the *Official Journal of the European Union*.

This Regulation**, with the exceptionof points (3) and (4) of Article 4 ,** shall apply **from ...** as of [~~*OP: please insert the date = 30*~~ ***42*** *months from the date of entry into force of this Regulation*].

This Regulation shall be binding in its entirety and directly applicable in all Member States.

Done at Brussels,

| | |
|---|---|
| *For the European Parliament* | *For the Council* |
| *The President* | *The President* |

# ANNEX I

## BIODEGRADABILITY REQUIREMENTS REFERRED TO IN ARTICLE 4

## BIODEGRADABILITY CRITERIA AND TEST METHODS FOR SURFACTANTS, SURFACTANTS CONTAINED IN DETERGENTS, POLYMERS USED TO ENCAPSULATE DETERGENTS AND OTHER ORGANIC INGREDIENTS CONTAINED IN DETERGENTS ~~SURFACTANTS IN DETERGENTS~~

### A: Ultimate Biodegradabilty for surfactants and surfactants contained in detergents

1. The reference method for laboratory testing of surfactant ultimate biodegradability in this Regulation is based on the EN ISO standard 14593: 1999 ($CO_2$ headspace test).

2. Surfactants and surfactants contained in detergents shall be ultimately biodegradable as determined in accordance with the criteria laid down in point 3.

3. Surfactants and surfactants contained in detergents shall be considered as ultimately biodegradable if they meet one of the following criteria:

(a) the level of biodegradability (mineralisation) is at least 60 % within 28 days measured in accordance with one of the following test methods:

(i) EN ISO Standard 14593: 1999 — Water quality — Evaluation of ultimate aerobic biodegradability of organic compounds in aqueous medium — Method by analysis of inorganic carbon in sealed vessels ($CO_2$ headspace test);

(ii) method C.4.-C Carbon dioxide ($CO_2$) Evolution Test (Modified Sturm Test), described in Part C, Part IV, of the Annex to Commission Regulation (EC) No 440/2008[19];

(iii) method C.4-D, manometric respirometry test, described in Part C, Part V, of the Annex to Regulation (EC) No 440/2008;

(iv) method C.4-E, closed bottle test, described in Part C, Part VI, of the Annex to Regulation (EC) No 440/2008;

(v) method C.4-F Ministry of International Trade and Industry, Japan (M.I.T.I.) described in Part C, Part VII, of the Annex to Regulation (EC) No 440/2008;

(vi) ISO 10708: 1997 — Water quality — Evaluation in an aqueous medium of the ultimate aerobic biodegradability of organic compounds — Determination of biochemical oxygen demand in a two-phase closed bottle test.

[19] Commission Regulation (EC) No 440/2008 of 30 May 2008 laying down test methods pursuant to Regulation (EC) No 1907/2006 of the European Parliament and of the Council on the Registration, Evaluation, Authorisation and Restriction of Chemicals (REACH) (OJ L 142, 31.5.2008, p. 1).

(b) the level of biodegradability (mineralisation) is at least 70% within 28 days measured in accordance with one of the following test methods:

(i) method C.4-A DOC die-away test described in Part C, Part II, of the Annex to Regulation (EC) No 440/2008;

(ii) method C.4-B, modified OECD screening test described in Part C, Part III, of the Annex to Regulation (EC) No 440/2008.

Pre-adaptation shall not be used and the 10-day window principle shall not be applied in any of the test methods referred to in points (a) and (b) .

4. The tests referred to in point 3 shall be conducted by laboratories meeting any of the following conditions:

(a) the laboratories are complying with the principles of good laboratory practice provided for in Directive 2004/10/EC of the European Parliament and of the Council[20] or international standards recognised as being equivalent;

(b) the laboratories are accredited in accordance with the standard for laboratories referred to in Regulation (EC) No 765/2008.

**B. Biodegradabilty requirements ~~of organic polymers and of other organic ingredients~~ for polymers used to encapsulate detergents**

**C. Biodegradability requirements for other organic ingredients contained in detergents**

[20] Directive 2004/10/EC of the European Parliament and of the Council of 11 February 2004 on the harmonisation of laws, regulations and administrative provisions relating to the application of the principles of good laboratory practice and the verification of their applications for tests on chemical substances (OJ L 50, 20.2.2004, p. 44).

## ANNEX II

## REQUIREMENTS FOR DETERGENTS CONTAINING MICRO-ORGANISMS REFERRED TO IN ARTICLE 5

1. Micro-organisms ~~intentionally~~ added to detergents shall comply with the following conditions:

   (a) shall have an American Type Culture Collection (ATCC) number, belong to a collection of an International Depository Authority (IDA) or have had their DNA identified in accordance with a "Strain identification protocol" (using 16S ribosomal DNA sequencing or an equivalent method);

   (b) shall belong to both of the following:

      (i) Risk Group I as defined by Directive 2000/54/EC – biological agents at work;

      (ii) The Qualified Presumption of Safety (QPS) list issued by the European Food Safety Authority (EFSA)**, excluding micro-organisms listed for production purpose only**.

   ~~This point shall not apply to micro-organisms intentionally added to detergents placed on the market for research and development purposes.~~

2. The following pathogenic micro-organisms shall not be present in any of the strains included in the finished product when screened using the indicated test methods or equivalent:

(a) *E. coli*, test method ISO 16649-3: ~~2005~~ **2015**;

(b) ***Enterobacteriaceae*** ~~*Streptococcus (Enterococcus)*~~, test method ISO 21528-1: ~~2004~~ **2017**;

(c) *Staphylococcus aureus*, test method ISO 6888-1;

(d) *Bacillus cereus*, test method ISO 7932:2004 or ISO 21871;

(e) *Salmonella*, test method ISO 6579:2002 or ISO 19250.

**The finished product shall not contain significant amounts of other micro-organisms than those reported as the microbial strain(s) used as the cleaning agent(s).**

3. ~~Intentionally a~~**A**dded micro-organisms shall not be genetically modified micro-organisms.

4. ~~Intentionally a~~**A**dded micro-organisms shall be, with the exception of intrinsic resistance, susceptible to each of the major antibiotic classes, namely aminoglycoside, macrolide, beta-lactam, tetracycline and fluoroquinolones, in accordance with the European Committee on Antimicrobial Susceptibility Testing (EUCAST) disk diffusion method or equivalent.

5. When placed on the market, detergents containing micro-organisms shall have a standard plate count equal to or greater than $1x10^5$ colony-forming units (CFUs) per ml in accordance with ISO 4833-1:2014 or if not suitable for the micro-organisms in question, other internationally recognized methods.

6. ~~The minimum shelf life of a detergent containing micro-organisms shall not be lower than 24 months and the microbial count shall not decrease by more than 10 % every 12 months in accordance with ISO 4833-1:2014.~~ **The minimum shelf life of a detergent containing micro-organisms shall not be shorter than 18 months and shall have a standard plate count equal to or greater than $1x10^4$ colony-forming units (CFUs) per ml in accordance with ISO 4833-1:2014, or corresponding method, at the end of the shelf-life.**

7. ~~Micro-organisms contained in detergents that are placed on the market in a spray format shall pass the acute inhalation toxicity test in accordance with the test method B.2., described in Part B of the Annex to Regulation (EC) No 440/2008.~~

**Detergents containing micro-organisms may be placed on the market in a spray format if:**

**(a) the manufacturer or an appropriate third party has carried out and made available in the technical documentation a risk assessment taking into account appropriate methodologies, covering all potential risks posed by the micro-organisms to human health and the environment, and demonstrating their safe use; and**

**(b) in addition to the requirements laid down in Annex V, their label contains:**

**i) the following warning: "This product may cause respiratory sensitisation", unless they are already labelled for respiratory sensitisation in accordance with Regulation (EC) No 1272/2008; and**

**ii) instructions for use ensuring the safety of the users, if necessary by protective equipment, the safety of other individuals who risk being exposed to the microorganisms, and protection of the environment.**

8. Detergents containing micro-organisms shall not be placed on the market in a refill format.

9. All claims made by the manufacturer regarding the actions of the micro-organisms ~~contained~~ **added** in the product shall be supported by ~~third-party~~ testing.

10. It is prohibited to claim or suggest on the label or by any other communication that the detergent has an antimicrobial or disinfecting effect, unless the detergent complies with Regulation (EU) No 528/2012.

11. The tests referred to in points 2, **4,** 5, **6 and 9**~~6, 7 and 9~~ shall be conducted by laboratories meeting any of the following conditions:

(a) the laboratories are complying with the principles of good laboratory practice provided for in Directive 2004/10/EC of the European Parliament and of the Council[21] or international standards recognised as being equivalent;

(b) the laboratories are accredited in accordance with the standard for laboratories referred to in Regulation (EC) No 765/2008.

[21] Directive 2004/10/EC of the European Parliament and of the Council of 11 February 2004 on the harmonisation of laws, regulations and administrative provisions relating to the application of the principles of good labo

## ANNEX III

## LIMITATIONS ON THE CONTENT OF PHOSPHATES AND OTHER PHOSPHORUS COMPOUNDS REFERRED TO IN ARTICLE 6

| Detergent | Limitations |
|---|---|
| Consumer laundry detergents | ~~Shall not be placed on the market if the~~ **The** total content of phosphorus **is** ~~is equal to or greater~~**lower** than 0,5-grams in the recommended quantity of the detergent to be used in the main cycle of the washing process for a standard washing machine load as defined in Part B of Annex V for hard water:<br>– for 'normally soiled' fabrics in the case of heavy-duty detergents,<br>– for 'lightly soiled' fabrics in the case of detergents for delicate fabrics.<br>~~.~~ |
| Consumer automatic dishwasher detergents | ~~Shall not be placed on the market if the~~**The** total content of phosphorus is ~~equal to or greater~~**lower** than 0,3 grams in the standard dosage as defined in Part B of Annex V. |

# ANNEX IV

## CONFORMITY ASSESSMENT PROCEDURE REFERRED TO IN ARTICLE 7(2)

### Module A - Internal production protocol

1. Description of the module

Internal production control is the conformity assessment procedure whereby the manufacturer fulfils the obligations laid down in points 2, 3 and 4, and ensures and declares on his or her sole responsibility that the detergent or surfactant concerned satisfy the requirements of this Regulation that apply to them.

2. Technical documentation

2.1. The manufacturer shall establish the technical documentation. The documentation shall make it possible to assess conformity of the detergent or surfactant with the relevant requirements, and shall include an adequate analysis and assessment of the risks.

2.2. The technical documentation shall specify the applicable requirements and cover, as far as relevant for the assessment, the design, manufacture and intended use of the detergent or surfactant. The technical documentation shall contain~~, where applicable,~~ at least the following elements:

(a) a general description of the detergent or surfactant and a description of the intended use;

(b) the test reports demonstrating the compliance with Annex I and, where applicable, with Annex~~es~~ II**,** ~~and III~~**and the risk assessment of detergents containing added micro-organisms**;

(c) a list of test methods used to demonstrate compliance with the requirements of this Regulation ;

(d) results of calculations made**, including to demonstrate compliance with the limit values in Annexes II and III, where applicable,** and examinations carried out;

(e) an ingredient**s** data sheet which **contains**~~meets the following requirements~~:

(i) **the name or trade name of the detergent or surfactant,** ~~and of~~ **the name, registered trade name or registered trade mark of the manufacturer and the intended use of the detergent;**

**(ii) the** list~~s~~ **of** all **added** ~~**contained**intentionally added~~ substances**;**~~,~~ **for this purpose, a perfume, an essential oil or a colouring agent shall be considered to be a single component, however** ~~**except impurities; the**~~ ~~and~~ preservatives **and fragrance allergens shall also** ~~**only**~~ **be listed if they must be** ~~referred to in~~**labelled in accordance with Regulation (EC) No 1272/2008, Regulation (EU) No 528/2012 or point 3 or 4 of** Part A~~(3)~~ of Annex V;

~~(ii)~~ the common chemical name or IUPAC name and, where available, the INCI name**, the EC number**~~,~~ **and** the CAS number, ~~and the European Pharmacopoeia name,~~ is **provided for each substance**~~given for each ingredient~~;

~~(iii)~~ all substances are listed in order of decreasing abundance by weight, and the list is sub-divided into the following weight percentage ranges:

(1) 10 % or more,

(2) 1 % or over, but less than 10 %,

(3) 0,1 % or over, but less than 1 %,

(4) less than 0,1 %.

(iii) the list of all ~~intentionally~~ added micro-organisms **providing their taxonomic classification (genus, species, strain), the ATCC or IDA numbers or documentation on their DNA identification and their concentration in the product; their concentration shall be expressed as the number of active units per volume or weight, or in any other manner that is relevant to the micro-organism, e.g. colony forming units per gram (cfu/g).**

~~For the purposes of point (e), a perfume, an essential oil, or a colouring agent shall be considered to be a single component.~~

**(f) A specimen of their label in accordance with Article 15.**

3. Manufacturing

The manufacturer shall take all measures necessary so that the manufacturing process and its monitoring ensure compliance of the detergent or surfactant with the technical documentation referred to in point 2 and with the requirements of this Regulation that apply to them.

**4. Product passport**

**The manufacturer shall create the digital product passport for each model of detergent or surfactant and ensure that together with the technical documentation, it remains available for 10 years after the detergent or surfactant has been placed on the market. The digital product passport shall identify the detergent or surfactant for which it has been drawn up.**

# ANNEX V

## LABELLING REQUIREMENTS

### PART A – LABELLING OF CONTENTS

The information to be included on the labels of detergents and surfactants made available on the market

1. The weight percentage ranges ‘less than 5 %’, ‘5 % or over but less than 15 %’, ‘15 % or over but less than 30 %’, ‘30 % and more’, shall be used to indicate the content of the constituents listed below where they are added in a concentration above 0,2 % by weight:

   (a) phosphates,

   (b) phosphonates,

   (c) anionic surfactants,

   (d) cationic surfactants,

   (e) amphoteric surfactants,

   (f) non-ionic surfactants,

   (g) oxygen-based bleaching agents,

   (h) chlorine-based bleaching agents,

   (i) EDTA and salts thereof,

   (j) NTA (nitrilotriacetic acid) and salts thereof,

   (k) phenols and halogenated phenols,

(l) paradichlorobenzene,

(m) aromatic hydrocarbons,

(n) aliphatic hydrocarbons,

(o) halogenated hydrocarbons,

(p) soap,

(q) zeolites,

(r) polycarboxylates.

2. The following classes of constituents, if added, shall be listed irrespective of their concentration:

(a) enzymes,

(b) micro-organisms,

(c) optical brighteners,

(d) perfumes.

3. **Except when they are already labelled on the product in accordance with Article 18.3(b) of Regulation (EC) No 1272/2008 or Article 58 of Regulation (EU) No 528/2012, p**~~P~~reservatives shall be listed, using where possible the system referred to in Article 33 of Regulation (EC) No 1223/2009~~, irrespective of their concentration,~~ provided that they meet **one of** the following conditions:

(a) **they** contribute to the qualification of the detergent **or surfactant** as a treated article within the meaning of Article 3(1), point (l), of Regulation (EU) No 528/2012**, irrespective of their concentration**; **or**

(b) **they** are labelled on a constituent of the detergent **or surfactant**, **unless the concentration of the preservative in the detergent or surfactant does not exceed the thresholds of 0.00015 % (w/w).**

~~The condition listed in point (b) of the first subparagraph does not have to be met where preservatives do not exceed the elicitation thresholds referred to in point 3.4.3.3. / table 3.4.6.~~**,** ~~**inluding Note 1,** of Annex I to Regulation (EC) No 1272/2008 or they no longer have a preservation function in the final product even in synergies with other preservatives~~.

4. If **contained** ~~added~~ at concentrations exceeding 0,01 % by weight, **the** ~~the~~**fragrance** allergen**s**~~sic~~ ~~fragrances that are~~ listed in **the Appendix**~~entries 45, 67-92 and [X] to [X] of Annex III to Regulation (EC) No 1223/2009,~~ shall be labelled using**, where applicable,** the system referred to in Article 33 of ~~that~~ Regulation **(EC) 1223/2009**.

The first sentence shall not apply to **fragrance** allergen**s**~~sic fragrances~~ that **are already labelled on the product in accordance with**~~meet the labelling thresholds under~~ **Article 18.3(b) of** Regulation (EC) No 1272/2008.

5. The requirements referred to in points 1 to 4 shall not apply to industrial and institutional detergents and surfactants, provided that the equivalent information to that required in those points is provided in section 15 of the safety data sheet drawn up in accordance with Article 31 of Regulation (EC) No 1907/2006.

6. In addition to the information listed in points 1 to 5, as applicable, the label of detergents containing micro-organisms shall bear the following information:

(a) an indication or a precautionary statement that the product is not to be used on food nor surfaces in contact with food, except if the product has been found safe for such applications on the basis of a risk assessment made available in the technical documentation;

(b) an indication of the shelf life of the product;

(c) use instructions or special precautions, where relevant.

**PART B – LABELLING OF DOSAGE INFORMATION**

The information to be included on the label of consumer laundry detergents, consumer automatic dishwasher detergents and consumer detergents for surface cleaning.

1. The label of consumer laundry detergents shall contain the following information:

(a) the recommended quantities and/or dosage instructions expressed in millilitres or grams appropriate to a standard washing machine load, for soft, medium and hard water hardness levels and making provision for one or two cycle washing processes,

(b) for heavy-duty detergents, the number of standard washing machine loads of 'normally soiled' fabrics, and, for detergents for delicate fabrics, the number of standard washing machine loads of 'lightly soiled' fabrics, that can be washed with the contents of the package using water of medium hardness, corresponding to 2,5 millimoles $CaCO_3$/l,

(c) the capacity of any measuring cup, if provided, shall be indicated in millilitres or grams, and markings shall be provided to indicate the dose of detergent appropriate for a standard washing machine load for soft, medium and hard water hardness levels,

2. For the purposes of point 1, the standard washing machine loads shall be 4,5 kg dry fabric for heavy-duty detergents and 2,5 kg dry fabric for light-duty detergents. A detergent shall be considered to be a heavy-duty detergent unless the claims of the manufacturer predominantly promote fabric care, namely low temperature wash, delicate fibres and colours.

3. The label of consumer automatic dishwasher detergents shall indicate the standard dosage expressed in grams or millilitres or number of tablets or capsules for the main washing cycle for normally soiled tableware in a fully loaded 12 place settings dishwasher, adjusting the standard dosage, where relevant, for soft, medium, and hard water hardness.

4. The label of consumer detergents for surfaces shall contain the recommended dilution and quantity to be used per surface area or other relevant use instructions to ensure the products is not used in excess.

## PART C – DIGITAL LABELLING

The following content information referred to in part A, may be provided on the digital label only, in accordance with Article 16(1), second subparagraph, in the manner specified in that part:

(a) anionic surfactants;

(b) cationic surfactants;

(c) amphoteric surfactants;

(d) non-ionic surfactants;

(e) phosphates;

(f) phosphonates;

(g) soap.

## PART D – SIMPLIFIED DOSAGE INFORMATION FOR CONSUMER LAUNDRY DETERGENTS

The simplified dosage grid shall contain the following information:

(a) basic instructions for use, where relevant;

(b) the recommended quantities based on medium/average water hardness and different degrees of fabric soiling; and

(c) an indication of the washing machine load.

## Appendix

## List of fragrance allergens referred to in point 4 in Part A of Annex V

| Reference number | Chemical name/INN[1] | Name of Common Ingredients Glossary | CAS number | EC number |
|---|---|---|---|---|
| 1 | Benzyl alcohol | Benzyl Alcohol | 100-51-6 | 202-859-9 |
| 2 | 6-Methylcoumarin | 6-Methyl Coumarin | 92-48-8 | 202-158-8 |
| 3 | 2-Benzylideneheptanal | Amyl cinnamal | 122-40-7 | 204-541-5 |
| 4 | Cinnamyl alcohol | Cinnamyl alcohol | 104-54-1 | 203-212-3 |
| 5 | 3,7-Dimethyl-2,6-octadienal | Citral | 5392-40-5 | 226-394-6 |
| | (E)-3,7-dimethylocta-2,6-dienal | Geranial | 141-27-5 | 205-476-5 |
| | (Z)-3,7-dimethylocta-2,6-dienal | Neral | 106-26-3 | 203-379-2 |
| 6 | Phenol, 2-methoxy-4-(2-propenyl) | Eugenol | 97-53-0 | 202-589-1 |
| 7 | 7-Hydroxycitronellal | Hydroxycitronellal | 107-75-5 | 203-518-7 |
| 8 | Phenol, 2-methoxy-4-(1-propenyl) | Isoeugenol | 97-54-1 | 202-590-7 |
| | (E)-2-methoxy-4-(prop-1-enyl)phenol; | Isoeugenol | 5932-68-3 | 227-678-2 |

| | | | | |
|---|---|---|---|---|
| | (trans-Isoeugenol) | | | |
| | (Z)-2-methoxy-4-(prop-1-enyl)phenol; (cis-Isoeugenol) | Isoeugenol | 5912-86-7 | 227-633-7 |
| 9 | 2-Pentyl-3-phenylprop-2-en-1-ol | Amylcinnamyl alcohol | 101-85-9 | 202-982-8 |
| 10 | Benzyl salicylate | Benzyl salicylate | 118-58-1 | 204-262-9 |
| 11 | 2-Propenal, 3-phenyl- | Cinnamal | 104-55-2 | 203-213-9 |
| 12 | 2H-1-Benzopyran-2-one | Coumarin | 91-64-5 | 202-086-7 |
| 13 | 2,6-Octadien-1-ol, 3,7-dimethyl-, (2E)- | Geraniol | 106-24-1 | 203-377-1 |
| 14 | 4-Methoxybenzyl alcohol | Anise alcohol | 105-13-5 | 203-273-6 |
| 15 | 2-Propenoic acid, 3-phenyl-, phenylmethyl ester | Benzyl cinnamate | 103-41-3 | 203-109-3 |
| 16 | 2,6,10-Dodecatrien-1-ol, 3,7,11-trimethyl- | Farnesol | 4602-84-0 | 225-004-1 |
| 17 | 1,6-Octadien-3-ol, 3,7-dimethyl- | Linalool | 78-70-6 | 201-134-4 |
| 18 | Benzyl benzoate | Benzyl benzoate | 120-51-4 | 204-402-9 |
| 19 | Citronellol/ (±) 3,7-Dimethyl-6-octen-1-ol | Citronellol | 106-22-9/ 26489-01-0 | 203-375-0/ 247-737-6 |
| | (3*R*)-3,7-dimethyloct-6-en-1-ol | Citronellol | 1117-61-9 | 214-250-5 |
| | (3*S*)-3,7-dimethyloct-6-en-1-ol | Citronellol | 7540-51-4 | 231-415-7 |
| 20 | 2-Benzylideneoctanal | Hexyl cinnamal | 101-86-0 | 202-983-3 |
| 21 | 1-methyl-4-prop-1-en-2-yl-cyclohexene; dl-limonene (racemic); Dipentene | Limonene | 138-86-3/ 7705-14-8 | 205-341-0/ 231-732-0 |

| | | | | |
|---|---|---|---|---|
| | **(R)-p-mentha-1,8-diene; (d-limonene)** | **Limonene** | **5989-27-5** | **227-813-5** |
| | **(S)-p-mentha-1,8-diene; (l-limonene)** | **Limonene** | **5989-54-8** | **227-815-6** |
| **22** | **Methyl Oct-2-ynoate; Methyl heptine carbonate** | **Methyl 2-Octynoate** | **111-12-6** | **203-836-6** |
| **23** | **3-Methyl-4-(2,6,6-trimethyl-2-cyclohexen-1-yl)-3-buten-2-one** | **alpha-Isomethyl ionone** | **127-51-5** | **204-846-3** |
| **24** | **Oak moss extract** | **Evernia prunastri extract** | **90028-68-5** | **289-861-3** |
| **25** | **Treemoss extract** | **Evernia furfuracea extract** | **90028-67-4** | **289-860-8** |
| **269** | ***Pinus mugo* leaf and twig oil and extract** | **Pinus Mugo Leaf Oil; Pinus Mugo Twig Leaf Extract; Pinus Mugo Twig Oil** | **90082-72-7** | **290-163-6** |
| **27** | ***Pinus pumila* leaf and twig oil and extract** | **Pinus Pumila Needle Extract;**<br>**Pinus Pumila Twig Leaf Extract;**<br>**Pinus Pumila Twig Leaf Oil** | **97676-05-6** | **307-681-6** |
| **28** | ***Cedrus atlantica* oil and extract** | **Cedrus Atlantica Bark Extract;**<br>**Cedrus Atlantica Bark Oil;**<br>**Cedrus Atlantica Bark Water;**<br>**Cedrus Atlantica Leaf Extract;**<br>**Cedrus Atlantica Wood Extract;**<br>**Cedrus Atlantica Wood Oil** | **92201-55-3/**<br>**8023-85-6** | **295-985-9/**<br>**-** |
| **29** | **Turpentine gum (*Pinus* spp.); Turpentine oil and rectified oil; Turpentine, steam** | **Turpentine** | **9005-90-7;** | **232-688-5;** |

| | | | | |
|---|---|---|---|---|
| | distilled (*Pinus* spp.) | | 8006-64-2;<br>8052-14-0 | 232-350-7; |
| 30 | p-Mentha-1,3-diene | Alpha-Terpinene | 99-86-5 | 202-795-1 |
| 31 | p-Mentha-1,4(8)-diene | Terpinolene | 586-62-9 | 209-578-0 |
| 32 | *Myroxylon balsamum* var. *pereirae*; extracts and distillates; Balsam Peru oil, absolute and anhydrol (Balsam Oil Peru); Exudation of *Myroxylon pereirae* (Royle) Klotzsch (Peru balsam, crude) | Myroxylon Balsamum Pereirae Balsam Extract;<br>Myroxylon Balsamum Pereirae Balsam Oil; Myroxylon Pereirae Oil;<br>Myroxylon Pereirae Resin Extract;<br>Myroxylon Pereirae Resin | 8007-00-9 | 232-352-8 |
| 33 | 1-(2,6,6-trimethyl-2-cyclohexen-1-yl)-2-buten-1-one | Alpha-Damascone;<br>cis-Rose ketone 1<br>trans-Rose ketone 1 | 43052-87-5/<br>23726-94-5<br>24720-09-0 | -/<br>245-845-8<br>246-430-4 |
| | 1-(2,6,6-Trimethylcyclohexa-1,3-dien-1-yl)-2-buten-1-one | Rose ketone 4 (Damascone) | 23696-85-7 | 245-833-2 |
| | 1-(2,6,6-Trimethyl-3-cyclohexen-1-yl)-2-buten-1-one | Rose ketone 3 (delta-Damascone)<br>trans-Rose ketone 3 | 57378-68-4<br>71048-82-3 | 260-709-8<br>275-156-8 |
| | (Z)-1-(2,6,6-trimethyl-1-cyclohexen-1-yl)-2-buten-1-one | cis-Rose ketone 2<br>(cis-beta-Damascone) | 23726-92-3 | 245-843-7 |
| | (E)-1-(2,6,6-Trimethyl-1-cyclohexen-1-yl)-2-buten-1-one | trans-Rose ketone 2<br>(trans-beta-Damascone) | 23726-91-2 | 245-842-1 |

| | | | | |
|---|---|---|---|---|
| 34 | 3-Propylidene-1(3H)-isobenzofuranone; 3-Propylidenephthalide | 3-Propylidenephthalide | 17369-59-4 | 241-402-8 |
| 35 | Verbena absolute | Lippia citriodora absolute | 8024-12-2/ 85116-63-8 | 285-515-0 |
| 36 | Verbena essential oils (Lippia citriodora Kunth.) and derivatives other than absolute | Lippia citriodora leaf; Lippia citriodora flower oil; Lippia citriodora oil | 8024-12-2 | 285-515-0 |
| 37 | Methyl 2-hydroxybenzoate | Methyl Salicylate | 119-36-8 | 204-317-7 |
| 38 | [3R-(3α,3aβ,7β,8aα)]-1-(2,3,4,7,8,8a-hexahydro-3,6,8,8-tetramethyl-1H-3a,7-methanoazulen-5-yl)ethan-1-one | Acetyl Cedrene | 32388-55-9 | 251-020-3 |
| 39 | Pentyl-2-hydroxy-benzoate | Amyl Salicylate | 2050-08-0 | 218-080-2 |
| 40 | 1-Methoxy-4-(1E)-1-propen-1-yl-benzene (trans-Anethole) | Anethole | 104-46-1/ 4180-23-8 | 203-205-5/ 224-052-0 |
| 41 | Benzaldehyde | Benzaldehyde | 100-52-7 | 202-860-4 |
| 42 | Bornan-2-one; 1,7,7-Trimethylbi-cyclo[2.2.1]-2-heptanone | Camphor | 76-22-2/ 21368-68-3/ 464-49-3/ 464-48-2 | 200-945-0/ 244-350-4/ 207-355-2/ 207-354-7 |
| 43 | (1R,4E,9S)-4,11,11-Trimethyl-8-methylenebicyclo[7.2.0]undec-4-ene | Beta-Caryophyllene | 87-44-5 | 201-746-1 |

| | | | | |
|---|---|---|---|---|
| 44 | 2-methyl-5-(prop-1-en-2-yl)cyclohex-2-en-1-one;(5R)-2-Methyl-5-prop-1-en-2-ylcyclohex-2-en-1-one;(5S)-2-Methyl-5-prop-1-en-2-ylcyclohex-2-en-1-one | Carvone | 99-49-0 / 6485-40-1/ 2244-16-8 | 202-759-5/ 229-352-5/ 218-827-2 |
| 45 | 2-Methyl-1-phenyl-2-propyl acetate; Dimethylbenzyl Carbinyl Acetate | Dimethyl Phenethyl Acetate | 151-05-3 | 205-781-3 |
| 46 | Oxacyclohepta-decan-2-one | Hexadecanolactone | 109-29-5 | 203-662-0 |
| 47 | 1,3,4,6,7,8-Hexahydro-4,6,6,7,8,8-hexamethylcyclopenta-γ-2-benzopyran | Hexamethylindanopyran | 1222-05-5 | 214-946-9 |
| 48 | 3,7-Dimethyl octa-1,6-diene-3-yl acetate | Linalyl Acetate | 115-95-7 | 204-116-4 |
| 49 | Menthol;<br>dl-menthol;<br>l-menthol;<br>d-menthol | Menthol | 89-78-1 / 1490-04-6 / 2216-51-5 / 15356-60-2 | 201-939-0/ 216-074-4/ 218-690-9/ 239-387-8 |
| 50 | 3-Methyl-5-(2,2,3-Trimethyl-3-Cyclopentenyl)pent-4-en-2-ol | Trimethylcyclopentenyl Methylisopentenol | 67801-20-1 | 267-140-4 |
| 51 | o-Hydroxy-benzaldehyde | Salicylaldehyde | 90-02-8 | 201-961-0 |
| 52 | 5-(2,3-Dimethyl-tricyclo[2.2.1.02,6]-hept-3-yl)-2-methylpent-2-en-1-ol (alpha-Santalol);<br>(1S-(1a,2a(Z),4a))-2-Methyl-5-(2-methyl-3-methylenebicyclo[2.2.1]hept-2-yl)-2-penten-1-ol<br>(beta-Santalol) | Santalol | 11031-45-1/<br>115-71-9/<br>77-42-9 | 234-262-4/<br>204-102-8/<br>201-027-2 |
| 53 | [1R-(1alpha)]-alpha-Ethenyldecahydro-2-hydroxy-a,2,5,5,8a-pentamethyl-1- | Sclareol | 515-03-7 | 208-194-0 |

| | | | | |
|---|---|---|---|---|
| | naphthalenepropanol | | | |
| 54 | 2-(4-methylcyclohex-3-en-1-yl)propan-2-ol; p-Menth-1-en-8-ol (alpha-Terpineol); 1-methyl-4-(1-methylvinyl)cyclohexan-1-ol (beta-Terpineol); 1-methyl-4-(1-methylethylidene)cyclohexan-1-ol (gamma-Terpineol) | Terpineol | 8000-41-7/ 98-55-5/ 138-87-4/ 586-81-2 | 232-268-1/ 202-680-6/ 205-342-6/ 209-584-3 |
| 55 | 1-(1,2,3,4,5,6,7,8-octahydro-2,3,8,8-tetramethyl-2-naphthyl)ethan-1-one; 1-(1,2,3,4,5,6,7,8-octahydro-2,3,5,5-tetramethyl-2-naphthyl)ethan-1-one; 1-(1,2,3,5,6,7,8,8a-octahydro-2,3,8,8-tetramethyl-2-naphthyl)ethan-1-one; 1-(1,2,3,4,6,7,8,8a-octahydro-2,3,8,8-tetramethyl-2-naphthyl)ethan-1-one | Tetramethyl acetyloctahydronaphthalenes | 54464-57-2/ 54464-59-4/ 68155-66-8/ 68155-67-9/ | 259-174-3/ 259-175-9/ 268-978-3/ 268-979-9/ |
| 56 | 3-(2,2-Dimethyl-3-hydroxypropyl)toluene | Trimethylbenzenepropanol | 103694-68-4 | 403-140-4 |
| 57 | 4-Hydroxy-3-methoxybenz-aldehyde | Vanillin | 121-33-5 | 204-465-2 |
| 58 | Cananga odorata flower oil and extract; Ylang Ylang flower oil and extract | Cananga Odorata Flower Extract; Cananga Odorata Flower Oil | 83863-30-3/ 8006-81-3/ 68606-83-7/ 93686-30-7 | 281-092-1/ -/ -/ 297-681-1 |
| 59 | Cinnamomum cassia leaf Oil | Cinnamomum Cassia Leaf Oil | 8007-80-5/ 84961-46-6 | -/ 284-635-0 |
| 60 | Cinnamomum zeylanicum bark oil | Cinnamomum Zeylanicum | 8015-91-6/ | -/ |

| | | | | |
|---|---|---|---|---|
| | | Bark Oil | 84649-98-9 | 283-479-0 |
| 61 | Citrus aurantium amara and dulcis flower oil | Citrus Aurantium Amara Flower Oil | 72968-50-4 | 277-143-2 |
| | | Citrus Aurantium Dulcis Flower Oil | 8028-48-6/ 8016-38-4 | 232-433-8/ - |
| 62 | Citrus aurantium amara and dulcis peel oil | Citrus Aurantium Amara Peel Oil | Citrus Aurantium Amara Peel Oil | -/ 277-143-2 |
| | Citrus aurantium amara and dulcis peel oil | Citrus Aurantium Dulcis Peel Oil;<br>Citrus Sinensis Peel Oil | Citrus Aurantium Dulcis Peel Oil;<br>Citrus Sinensis Peel Oil | 307-891-8/ 232-433-8/ - |
| 63 | Citrus aurantium bergamia oil (Bergamot oil) | Citrus Aurantium Bergamia Peel Oil | 8007-75-8<br>89957-91-5<br>68648-33-9/<br>8007-75-8/<br>85049-52-1 | 616-915-9<br>289-612-9<br>-/<br>616-915-9/<br>- |
| 64 | Citrus limon oil | Citrus Limon Peel Oil | 84929-31-7/<br>8008-56-8 | 284-515-8/ - |
| 65 | Cymbopogon citratus / schoenanthus/flexuosus oils | Cymbopogon Schoenanthus Oil | 8007-02-1/ 89998-16-3 | -/ 289-754-1 |

| | | | | |
|---|---|---|---|---|
| | **Cymbopogon citratus / schoenanthus/flexuosus oils** | **Cymbopogon Flexuosus Oil** | **91844-92-7** | **295-161-9** |
| | **Cymbopogon citratus / schoenanthus/flexuosus oils** | **Cymbopogon Citratus Leaf Oil** | **8007-02-1/ 91844-92-7** | **295-161-9/ 295-161-9** |
| **66** | **Eucalyptus globulus oil** | **Eucalyptus Globulus Leaf Oil;** | **97926-40-4/ 8000-48-4/** | **308-257-3/ 616-775-9/** |
| | | | | |
| | **Eucalyptus globulus oil** | **Eucalyptus Globulus Leaf/Twig Oil** | **8000-48-4** | |
| **67** | **Eugenia caryophyllus oil** | **Eugenia Caryophyllus Leaf Oil** | **8000-34-8 / 8015-97-2/ 84961-50-2** | **616-772-2/ -/ 284-638-7** |
| | **Eugenia caryophyllus oil** | **Eugenia Caryophyllus Flower Oil** | **84961-50-2** | **284-638-7** |
| | **Eugenia caryophyllus oil** | **Eugenia Caryophyllus Stem oil** | **84961-50-2** | **284-638-7** |
| | **Eugenia caryophyllus oil** | **Eugenia Caryophyllus Bud oil** | **84961-50-2** | **284-638-7** |
| **68** | **Jasminum grandiflorum / officinale oil and extract** | **Jasminum Grandiflorum Flower Extract;**<br>**Jasminum Officinale Oil;**<br>**Jasminum Officinale Flower Extract** | **84776-64-7/**<br>**90045-94-6/ 8022-96-6/ 8024-43-9**<br>**90045-94-6** | **283-993-5/**<br>**289-960-1/ -/**<br>**-**<br>**289-960-1** |

| | | | | |
|---|---|---|---|---|
| 69 | Juniperus virginiana oil | Juniperus Virginiana Oil; Juniperus Virginiana Wood Oil | 8000-27-9 / 85085-41-2 | -/ 285-370-3 |
| 70 | Laurus nobilis oil | Laurus Nobilis Leaf Oil | 8002-41-3/ 8007-48-5/ 84603-73-6 | -/ -/ 283-272-5 |
| 71 | Lavandula hybrida oil/extract; | Lavandula Hybrida Oil; Lavandula Hybrida Extract; Lavandula Hybrida Flower Extract; | 91722-69-9/ 8022-15-9/ 93455-96-0/ 93455-97-1/ 92623-76-2 | 294-470-6/ -/ -/ -/ 296-408-3 |
| | Lavandula intermedia oil/extract; | Lavandula Intermedia Flower/Leaf/Stem Extract; Lavandula Intermedia Flower/Leaf/Stem Oil; Lavandula Intermedia Oil | 84776-65-8/ 8000-28-0/ 90063-37-9 | 283-994-0/ -/ 289-995-2 |
| | Lavandula angustifolia oil/extract | Lavandula Angustifolia Oil; Lavandula Angustifolia Flower/Leaf/Stem Extract | 84776-65-8/ 8000-28-0/ 90063-37-9 | 283-994-0/ -/ 289-995-2 |
| 72 | Mentha piperita oil | Mentha Piperita Oil | 8006-90-4/ 84082-70-2 | -/ 282-015-4 |
| 73 | Mentha spicata oil (spearmint oil) | Mentha Viridis Leaf Oil | 8008-79-5/ 84696-51- | 616-927-4/ |

| | | | | |
|---|---|---|---|---|
| | | | 5 | 283-656-2 |
| 74 | Narcissus poeticus/pseudonarcissus/jonquilla/tazetta extract | Narcissus Poeticus Extract | 90064-26-9/ 68917-12-4 | 290-087-3/ |
| | Narcissus poeticus/pseudonarcissus/jonquilla/tazetta extract | Narcissus Pseudonarcissus Flower Extract | 90064-27-0 | 290-088-9 |
| | Narcissus poeticus/pseudonarcissus/jonquilla/tazetta extract | Narcissus Jonquilla Extract<br>Narcissus Tazetta Extract | 90064-25-8 | 290-086-8 |
| 75 | Pelargonium graveolens oil | Pelargonium Graveolens Flower Oil | 90082-51-2/ 8000-46-2 | 290-140-0/ - |
| 76 | Pogostemon cablin oil | Pogostemon Cablin Oil | 8014-09-3/ 84238-39-1 | -/ 282-493-4 |
| 77 | Rosa damascena flower oil/extract; | Rosa Damascena Flower Oil; Rosa Damascena Flower Extract | 8007-01-0/ 90106-38-0/ | -/ 290-260-3 |
| | Rosa alba flower oil/extract; | Rosa Alba Flower Oil; Rosa Alba Flower Extract | 93334-48-6 | 297-122-1 |
| | Rosa canina flower oil; | Rosa Canina Flower Oil | 84696-47-9 | 283-652-0 |
| | Rosa centifolia oil/extract; | Rosa Centifolia Flower Oil; Rosa Centifolia Flower Extract | 84604-12-6 | 283-289-8 |
| | Rosa gallica flower oil; | Rosa Gallica Flower Oil | 84604-13-7 | 283-290-3 |
| | Rosa moschata flower oil; | Rosa Moschata Flower Oil | - | - |

| | | | | |
|---|---|---|---|---|
| | Rosa rugosa flower oil | Rosa Rugosa Flower Oil | 92347-25-6 | 296-213-3 |
| 78 | Santalum album oil | Santalum Album Oil | 8006-87-9/ 84787-70-2 | -/ 284-111-1 |
| 79 | Phenol, 2-methoxy-4-(2-propenyl)-, acetate | Eugenyl Acetate | 93-28-7 | 202-235-6 |
| 80 | 2,6-Octadien-1-ol, 3,7-dimethyl-,1-acetate, (2E)- | Geranyl Acetate | 105-87-3 | 203-341-5 |
| 81 | 2-Methoxy-4-prop-1-enylphenyl acetate | Isoeugenyl Acetate | 93-29-8 | 202-236-1 |
| 82 | 2,6,6-Trimethylbi-cyclo[3.1.1]hept-2-ene (alpha-Pinene);<br>6,6-Dimethyl- 2-methylenebicyclo[3.1.1]heptane (beta-Pinene) | Pinene | 80-56-8/ 7785-70-8/ 127-91-3/ 18172-67-3 | 201-291-9/ 232-087-8/ 204-872-5/ 242-060-2 |
| 83 | Allyl isothiocyanate | | 57-06-7 | 200-309-2 |
| 84 | 4-Benzyloxyphenol and 4-ethoxyphenol | | 103-16-2/ 622-62-8 | 203-083-3/ 210-748-1 |
| 85 | 4-Phenylbut-3-en-2-one (Benzylidene acetone) | | 122-57-6 | 204-555-1 |
| 86 | Cyclamen alcohol | Cyclamen homoaldehyde | 4756-19-8 | 225-289-2 |
| 87 | Diethyl maleate | | 141-05-9 | 205-451-9 |

| | | | | |
|---|---|---|---|---|
| 88 | 3,4-Dihydrocoumarin | Dihydrocoumarin | 119-84-6 | 204-354-9 |
| 89 | 7,11-Dimethyl-4,6,10-dodecatrien-3-one | Pseudomethylionone | 26651-96-7 | 247-878-3 |
| 90 | 6,10-Dimethyl-3,5,9-undecatrien-2-one | Pseudoionone | 141-10-6 | 205-457-1 |
| 91 | Ethyl acrylate | Ethyl acrylate | 140-88-5 | 205-438-8 |
| 92 | Fig leaf absolute (*Ficus carica* L.) | Ficus carica extract | 68916-52-9 | |
| 93 | trans-2-Heptenal | | 18829-55-5 | 242-608-0 |
| 94 | trans-2-Hexenal diethyl acetal | | 67746-30-9 | 266-989-8 |
| 95 | trans-2-Hexenal dimethyl acetal | | 18318-83-7 | 242-204-4 |
| 96 | Hydroabietyl alcohol | Hydroabietyl alcohol | 13393-93-6 | 236-476-3 |
| 97 | 1-(4-Methoxyphenyl)-1-penten-3-one (alpha-Methylanisylideneacetone) | | 104-27-8 | 203-190-5 |
| 98 | 5-Methyl-2,3-hexanedione (Acetyl isovaleryl) | | 13706-86-0 | 237-241-8 |
| 99 | 3,6,10-Trimethyl-3,5,9-undecatrien-2-one (Pseudo- Isomethyl ionone) | | 1117-41-5 | 214-245-8 |
| 100 | 7-Ethoxy-4-methylcoumarin | | 87-05-8 | 201-721-5 |
| 101 | Hexahydrocoumarin | | 700-82-3 | 211-851-4 |

| | | | | |
|---|---|---|---|---|
| 102 | 3- and 4-(4-Hydroxy-4-methylpentyl) cyclohex-3-ene-1-carbaldehyde (HICC) ([6]) | | 51414-25-6/<br>31906-04-4/ | 257-187-9/<br>250-863-4/ |
| 103 | 2,6-Dihydroxy-4-methyl-benzaldehyde (atranol) ([6]) | | 526-37-4 | — |
| 104 | 3-Chloro-2,6-Dihydroxy-4-methyl-benzaldehyde (chloroatranol) ([6]) | | 57074-21-2 | — |
| 105 | 2-(4-tert-butylbenzyl) propionaldehyde | | 80-54-6 | 201-289-8 |

[1] The Non-proprietary Names (INN) for pharmaceutical products, WHO, Geneva, August 1975

## ANNEX VI

## DIGITAL PRODUCT PASSPORT

The **digital** product passport shall include the following information:

(a) the unique product identifier of the detergent or surfactant;

(b) the name, the address of the manufacturer**, and when applicable, of the importer** or the manufacturer's authorised representative, as well the manufacturer's unique operator identifier;

(c) the identification of detergent or surfactant allowing traceability, including **its trade name and** a colour image **of the packaging of the detergent or surfactant** of sufficient clarity to enable **its**~~the~~ identification~~ of the detergent or surfactant~~;

**(ca) the mention that this passport is issued under the sole responsibility of the manufacturer;**

(d) the commodity code**, as defined in Council Regulation (EEC) No 2658/87**[22] under which the detergent or surfactant is classified at the moment~~-the~~ **digital** product passport is created~~, as set out in Council Regulation (EEC) No 2658/87~~;

(e) **a statement that compliance of the detergent or surfactant with the requirements set out in this Regulation has been demonstrated, and, where relevant,** references to **other** Union l**aw**~~egal acts~~ ~~that~~ **with which** the detergent or surfactant complies~~ with~~;

[22] Council Regulation (EEC) No 2658/87 of 23 July 1987 on the tariff and statistical nomenclature and on the Common Customs Tariff (OJ L 256, 7.9.1987, p. 1).

(f) a full list of substances added in the detergent or surfactant, **ordered by the following weight percentage ranges: 'less than 5 %', '5 % or over but less than 15 %', '15 % or over but less than 30 %', '30 % and more',** ~~and of preservatives labelled in accordance with part A, point 3, first subparagraph, point (b), of Annex V~~, using ~~the International Nomenclature of Cosmetic Ingredients, or where it is not available, the European Pharmacopoeia name and, when also the latter is not available,~~ the common chemical name or International Union of Pure and Applied Chemists **(IUPAC)** name **and, where available, the INCI name and the CAS number**~~.~~**; preservatives and fragrance allergens shall be listed if they must be labelled in accordance with Article 18(3), point b, of Regulation (EC) No 1272/2008, Article 58 of Regulation (EU) No 528/2012 or point 3 or 4 of Part A of Annex V;**

**(fa) a full list of all added micro-organisms providing their taxonomic classification (genus, species, strain).**

~~The obligation referred to in point (f) shall not apply to professional detergents, or to surfactants for professional detergents, for which a safety data sheet referred to in Article 31 of Regulation (EC) No 1907/2006 is available.~~

**ANNEX VIa**

**LIST OF COMMODITY CODES AND DESCRIPTION OF DETERGENTS AND SURFACTANTS FOR THE PURPOSES OF ARTICLE 21(5)**

# ANNEX VII

## TEST METHODS REFERRED TO IN ARTICLE 22(2)

1. Reference method (confirmatory test)

1.1. Definition

This method describes a laboratory model of the activated sludge and secondary settler which is designed to simulate municipal sewage treatment. Improved state-of-the-art operating conditions can be applied to this test method as described in EN ISO 11733.

1.2. Equipment needed for measurement

The method of measurement employs the small-activated sludge plant shown in Figure 1, and in greater detail in Figure 2. The equipment consists of a sewage vessel A for synthetic sewage, dosing pump B, aeration vessel C, settling vessel D, air-lift pump E to recycle the activated sludge, and vessel F for collecting the treated effluent.

Vessels A and F must be of glass or suitable plastic and hold at least twenty-four litres. Pump B must provide a constant flow of synthetic sewage to the aeration vessel; this vessel, during normal operation, contains three litres of mixed liquor. A sintered aeration cube G is suspended in the vessel C at the apex of the cone. The quantity of air blown through the aerator shall be monitored by means of a flow meter H.

1.3. Synthetic sewage

A synthetic sewage is employed for the test. Dissolve in each litre of tap water:

– 160 mg peptone;

– 110 mg meat extract;

– 30 mg urea, $CO(NH_2)_2$;

– 7 mg sodium chloride, NaCl;

– 4 mg calcium chloride, $CaCl_2.2H_2O$;

– 2 mg magnesium sulphate, $MgSO_4.7H_2O$;

– 28 mg of di-potassium hydrogen phosphate, $K_2HPO_4$;

– and 10 ± 1 mg of the surfactant.

The synthetic sewage is freshly prepared daily.

1.4. Preparation of samples

Uncompounded surfactants are examined in the original state. Active content of surfactant samples must be determined in order to prepare the synthetic sewage (point 1.3).

1.5. Operation of equipment

Initially, fill aeration vessel C and settling vessel D with synthetic sewage. The height of the vessel D should be so fixed that the volume contained in the aeration vessel C is three litres. Inoculation is made by introducing 3 ml of a secondary effluent of good quality, freshly collected from a treatment plant dealing with a predominantly domestic sewage. The effluent must be kept under aerobic conditions in the period between sampling and application. Then set the aerator G, air-lift E and dosing device B in operation. The synthetic sewage must pass through the aeration vessel C at a rate of one litre per hour; this gives a mean retention time of three hours.

The rate of aeration should be so regulated that the contents of vessel C are kept constantly in suspension and the dissolved oxygen content is at least 2 mg/l. Foaming must be prevented by appropriate means. Anti-foaming agents that inhibit the activated sludge or contain surfactants must not be used. The air-lift pump E must be set so that the activated sludge from the settling vessel is continually and regularly recycled to aeration vessel C. Sludge which has accumulated around the top of the aeration vessel C, in the base of the settling vessel D, or in the circulation circuit must be returned to the circulation at least once each day by brushing or some other appropriate means. When the sludge fails to settle, its settleability may be increased by the addition of 2 ml portions of a 5 % solution of ferric chloride, repeated as necessary.

The effluent from the settling vessel D is accumulated in vessel F for twenty-four hours, following which a sample is taken after thorough mixing. Vessel F must then be carefully cleaned.

1.6. Checking measuring equipment

The surfactant content (in mg/l) of the synthetic sewage is determined immediately before use.

The surfactant content (in mg/l) of the effluent collected over twenty-four hours in vessel F should be determined analytically by the same method, immediately after collection: otherwise the samples must be preserved, preferably by freezing. The concentrations must be determined to the nearest 0,1 mg/l surfactant

As a check on the efficiency of the process, the chemical oxygen demand (COD) or the dissolved organic carbon (DOC) of the glass fibre filtered effluent accumulated in vessel F and of the filtered synthetic sewage in vessel A is measured at least twice per week.

The reduction in COD or DOC should level off when a roughly regular daily surfactant degradation is obtained at the end of the running-in period shown in Figure 3.

The content of dry matter in the activated sludge contained in the aeration vessel should be determined twice a week in g/l. If it is more than 2,5 g/l, the excess activated sludge must be discarded.

The degradation test is performed at room temperature; this should be steady and kept between 19-24 ° C.

1.7. Calculation of biodegradability

The percentage degradation of surfactant must be calculated every day on the basis of the surfactant content in mg/l of the synthetic sewage and of the corresponding effluent accumulated in vessel F.

The degradability values thus obtained should be presented graphically as in Figure 3.

The degradability of the surfactant should be calculated as the arithmetic mean of the values obtained over the twenty-one days that follow the running-in and acclimatisation period, during which degradation has been regular and the operation of the plant trouble-free. In any event the duration of the running-in period should not exceed six weeks.

The daily degradation values are calculated to the nearest 0,1 % but the final result is given to the nearest whole number.

In some cases it may be permissible to reduce the frequency of sampling but at least fourteen results collected over the twenty-one days which follow the running-in period should be used in calculating the average.

2. Determination of anionic surfactants in biodegradability tests

2.1. Principle

The method is based on the fact that the cationic dye methylene blue forms blue salts with anionic surfactants (MBAS), which can be extracted with chloroform. To eliminate interference, the extraction is first effected from alkaline solution and the extract is then shaken with acidic methylene blue solution. The absorbency of the separated organic phase is measured photometrically at the wavelength of maximum absorption of 650 nm.

2.2. Reagents and equipment

2.2.1. Buffer solution pH 10

Dissolve 24 g sodium bicarbonate, $NaHCO_3$ AR, and 27 g anhydrous sodium carbonate ($Na_2CO_3$) AR in deionised water and dilute to 1000 ml.

2.2.2. Neutral methylene blue solution

Dissolve 0,35 g methylene blue AR in deionised water and dilute to 1000 ml. Prepare the solution at least twenty-four hours before use. The absorbency of the blank chloroform phase, measured against chloroform must not exceed 0,015 per 1 cm of layer thickness at 650 nm.

2.2.3. Acidic methylene blue solution

Dissolve 0,35 g methylene blue AR in 500 ml deionised water and mix with 6,5 ml $H_2SO_4$ (d = 1,84 g/ml). Dilute to 1000 ml with deionised water. Prepare the solution at least twenty-four hours before use. The absorbency of the blank chloroform phase, measured against chloroform must not exceed 0,015 per 1 cm of layer thickness at 650 nm.

2.2.4. Chloroform (trichloromethane) AR freshly distilled

2.2.5. Dodecyl benzene sulphonic acid methyl ester

2.2.6. Ethanolic potassium hydroxide solution, KOH 0,1 M

2.2.7. Ethanol pure, $C_2H_5OH$

2.2.8. sulphuric acid, $H_2SO_4$ 0,5 M

2.2.9. Phenolphthalein solution

Dissolve 1 g phenolphthalein in 50 ml ethanol and add 50 ml deionised water while stirring continuously. Filter off any precipitate obtained.

2.2.10. Methanolic hydrochloric acid: 250 ml hydrochloric acid AR and 750 ml methanol

2.2.11. Separating funnel, 250 ml

2.2.12. Graduated flask, 50 ml

2.2.13. Graduated flask, 500 ml

2.2.14. Graduated flask, 1000 ml

2.2.15. Round-bottomed flask with ground glass stopper and reflux condenser, 250 ml; boiling granules

2.2.16. pH meter

2.2.17. Photometer for measurements at 650 nm, with 1 to 5 cm cells

2.2.18. Qualitative grade filter paper

2.3. Procedure

The samples for analysis must not be taken through a layer of foam.

After thorough cleaning with water, the equipment used for the analysis must be thoroughly rinsed with methanolic hydrochloric acid (point 2.2.10) and then with deionised water before using.

Filter the activated sludge plant influent and effluent to be examined immediately on sampling. Discard the first 100 ml of the filtrates.

Place a measured volume of the sample, neutralised if necessary, into a 250 ml separating funnel (point 2.2.11). The volume of sample should contain between 20 and 150 g of MBAS. At the lower MBAS content, up to 100 ml of sample may be used. When using less than 100 ml, dilute to 100 ml with deionised water. Add to the sample 10 ml of buffer solution (point 2.2.1), 5 ml of neutral methylene blue solution (point 2.2.2) and 15 ml of chloroform (point 2.2.4). Shake the mixture uniformly and not too vigorously for one minute. After phase separation, run the chloroform layer into a second separating funnel, containing 110 ml of deionised water and 5 ml of acidic methylene blue solution (point 2.2.3). Shake the mixture for one minute. Pass the chloroform layer through a cotton-wool filter previously cleaned and wetted with chloroform into a graduated flask (point 2.2.12).

Extract the alkaline and acid solutions three times, using 10 ml of chloroform for the second and third extractions. Filter the combined chloroform extracts through the same cotton wool filter and dilute to the mark in the 50 ml flask (point 2.2.12) with chloroform used for rewashing the cotton wool. Measure the absorbency of the chloroform solution with a photometer at 650 nm in 1 to 5 cm cells against chloroform. Run a blank determination through the whole procedure.

2.4. Calibration curve

Prepare a calibration solution from the standard substance dodecylbenzene sulphonic acid methyl ester (tetrapropylene type mol. wt. 340) after saponification into the potassium salt. The MBAS is calculated as sodium dodecyl benzene sulphonate (mol. wt. 348).

From a weighing pipette, weigh 400 to 450 mg of dodecyl-benzene-sulphonic-acid-methyl-ester (point 2.2.5) to the nearest 0,1 mg in a round-bottomed flask and add 50 ml of ethanolic potassium hydroxide solution (point 2.2.6) and some boiling granules. After mounting the reflux condenser, boil for one hour. After cooling, wash the condenser and ground glass joint with about 30 ml of ethanol, and add these washings to the contents of the flask. Titrate the solution with sulphuric acid against phenolphthalein until it becomes colourless. Transfer this solution to a 1000 ml graduated flask (point 2.2.14), dilute to the mark with deionised water and mix.

Part of this surfactant stock solution is then further diluted. Withdraw 25 ml, transfer to a 500 ml graduated flask (point 2.2.13), dilute to the mark with deionised water and mix.

This standard solution contains:

$$\frac{E \text{ x } 1{,}023 \text{ mg MBAS per ml}}{20\ 000}$$

where E is the sample weight in mg.

To establish the calibration curve, withdraw 1, 2, 4, 6, 8 ml portions of the standard solution and dilute each to 100 ml with deionised water. Then proceed as stated under point 2.3 including a blank determination.

2.5. Calculation of results

The amount of anionic surfactant (MBAS) in the sample is read from the calibration curve (point 2.4). The MBAS content of the sample is given by:

$$\frac{\text{mg MBAS x } 1000}{V} = \text{MBAS mg/l}$$

where: V = ml volume of the sample used.

Express the results as sodium dodecylbenzene sulphonate (MW 348).

2.6. Expression of results

Express the results as MBAS mg/l to the nearest 0,1.

3. Determination of non-ionic surfactants in biodegradation test liquors

3.1. Principle

Surface active agents are concentrated and isolated by gas stripping. In the sample used, the quantity of non-ionic surfactant should be in the range 250-800 g.

The stripped surfactant is dissolved in ethyl acetate.

After phase separation and evaporation of the solvent, the non-ionic surfactant is precipitated in aqueous solution with modified Dragendorff reagent ($KBiI_4$ + $BaCl_2$ + glacial acetic acid).

The precipitate is filtered, washed with glacial acetic acid and dissolved in ammonium tartrate solution. The bismuth in the solution is titrated potentiometrically with pyrrolidinedithiocarbamate solution at pH 4-5 using a bright platinum indicator electrode and a calomel or silver/silver chloride reference electrode. The method is applicable to non-ionic surfactants containing 6-30 alkylene oxide groups.

The titration result is multiplied by the empirical factor of 54 for conversion to the reference substance nonylphenol condensed with 10 mols ethylene oxide (NP 10).

3.2. Reagents and Equipment

Reagents are to be made up in deionised water.

3.2.1. Pure ethyl acetate, freshly distilled.

3.2.2. Sodium bicarbonate, NaHCO3 AR.

3.2.3. Dilute hydrochloric acid [20 ml concentrated acid (HCl) diluted to 1000 ml with water]

3.2.4. Methanol AR, freshly distilled, stored in a glass bottle.

3.2.5. Bromocresol purple, 0,1 g in 100 ml methanol.

3.2.6. Precipitating agent: the precipitating agent is a mixture of two volumes of solution A and one volume of solution B. The mixture is stored in a brown bottle and can be used for up to one week after mixing.

3.2.6.1. Solution A

Dissolve 1,7 g bismuth nitrate, BiONO3.H2O AR, in 20 ml glacial acetic acid, and make up to 100 ml with water. Then dissolve 65 g potassium iodide AR in 200 ml water. Mix these two solutions in a 1000 ml measuring flask, add 200 ml glacial acetic acid (point 3.2.7) and make up to 1000 ml with water.

3.2.6.2. Solution B

Dissolve 290 g barium chloride, $BaCl_2.2H_2O$ AR, in 1000 ml of water.

3.2.7. Glacial acetic acid 99-100 % (lower concentrations are unsuitable).

3.2.8. Ammonium tartrate solution: mix 12,4 g tartaric acid AR and 12,4 ml of ammonia solution AR (d = 0,910 g/ml) and make up to 1000 ml with water (or use the equivalent amount of ammonium tartrate AR).

3.2.9. Dilute ammonia solution: 40 ml ammonia solution AR (d = 0,910 g/ml) diluted to 1000 ml with water.

3.2.10. Standard acetate buffer: dissolve 40 g solid sodium hydroxide AR, in 500 ml water in a beaker and allow to cool. Add 120 ml glacial acetic acid (point 3.2.7). Mix thoroughly, cool and transfer to a 1000 ml volumetric flask. Make up to the mark with water.

3.2.11. Pyrrolidinedithiocarbamate solution (known as ‘carbate solution’): dissolve 103 mg sodium pyrrolidinedithiocarbamate, C5H8NNaS2.2H2O, in about 500 ml water, add 10 ml of n-amyl alcohol AR and 0,5 g NaHCO3 AR, and make up to 1000 ml with water.

3.2.12. Copper sulphate solution (for standardisation of point 3.2.11).

STOCK SOLUTION

Mix 1,249 g copper sulphate, $CuSO_4.5H_2O$ AR, with 50 ml 0,5 M sulphuric acid and make up to 1000 ml with water.

STANDARD SOLUTION

Mix 50 ml stock solution with 10 ml 0,5 M $H_2SO_4$ and make up to 1000 ml with water.

3.2.13. Sodium chloride AR.

3.2.14. Gas-stripping apparatus (see Figure 5). The diameter of the sintered disc must be the same as the internal diameter of the cylinder.

3.2.15. Separating funnel, 250 ml.

3.2.16. Magnetic stirrer with magnet 25-30 mm.

3.2.17. Gooch crucible, diameter of the perforated base = 25 mm, Type G4.

3.2.18. Circular glass-fibre filter papers, 27 mm diameter with fibre diameter 0,3-1,5 m.

3.2.19. Two filter flasks with adapters and rubber collars, 500 and 250 ml respectively.

3.2.20. Recording potentiometer fitted with a bright platinum indicator electrode and a calomel or silver/silver chloride reference electrode with a 250 mV range, with automatic burette of 20-25 ml capacity, or alternative manual equipment.

3.3. Method

3.3.1. Concentration and separation of the surfactant

Filter the aqueous sample through a qualitative filter paper. Discard the first 100 ml of the filtrate.

Into the stripping apparatus, previously rinsed with ethyl acetate, place a measured quantity of the sample, such that it contains between 250-800 g non-ionic surfactant.

To improve the separation add 100 g sodium chloride and 5 g sodium bicarbonate.

If the volume of the sample exceeds 500 ml, add these salts to the stripping apparatus in solid form, and dissolve by passing nitrogen or air through.

If a smaller-sized sample is used, dissolve the salts in 400 ml water and then add to the stripping apparatus.

Add water to bring the level to the upper stopcock.

Cautiously add 100 ml ethyl acetate on top of the water.

Fill the wash-bottle in the gas-line (nitrogen or air) two-thirds full with ethyl acetate.

Pass a gas stream of 30-60 l/h through the apparatus; the use of a flowmeter is recommended. The rate of aeration must be increased gradually at the beginning. The gas rate must be so adjusted that the phases remain noticeably separate to minimise the mixing of the phases and the solution of the ethyl acetate in the water. Stop the gas flow after five minutes.

If there is a reduction of more than 20 % in the volume of the organic phase through solution in water, the sublation must be repeated paying special attention to the rate of gas flow.

Run off the organic phase into a separating funnel. Return any water in the separating funnel from the aqueous phase — it should only be a few ml — to the stripping apparatus. Filter the ethyl acetate phase through a dry qualitative filter paper into a 250 ml beaker.

Put a further 100 ml ethyl acetate into the stripping apparatus and again pass nitrogen or air through for five minutes. Draw off the organic phase into the separating funnel used for the first separation, reject the aqueous phase and run the organic phase through the same filter as the first ethyl acetate portion. Rinse both the separating funnel and the filter with about 20 ml ethyl acetate.

Evaporate the ethyl acetate extract to dryness using a water-bath (fume cupboard). Direct a gentle stream of air over the surface of the solution to accelerate the evaporation.

3.3.2. Precipitation and filtration

Dissolve the dry residue from 3.3.1 in 5 ml methanol, add 40 ml water and 0,5 ml dilute HCl (point 3.2.3) and stir the mixture with a magnetic stirrer.

To this solution add 30 ml of precipitating agent (point 3.2.6) from a measuring cylinder. The precipitate forms after repeated stirring. After stirring for ten minutes leave the mixture to stand for at least five minutes.**26**

Filter the mixture through a Gooch crucible, the base of which is covered with a glass-fibre filter paper. First wash the filter under suction with about 2 ml glacial acetic acid. Then thoroughly wash the beaker, magnet, and crucible with glacial acetic acid, of which about 40-50 ml is necessary. It is not necessary to quantitatively transfer the precipitate adhering to the sides of the beaker, to the filter, because the solution of the precipitate for the titration is returned to the precipitating beaker, and the remaining precipitate will then be dissolved.

3.3.3. Dissolution of the precipitate

Dissolve the precipitate in the filter crucible by the addition of hot ammonium tartrate solution (about 80 ° C) (point 3.2.8) in three portions of 10 ml each. Allow each portion to stand in the crucible for some minutes before being sucked through the filter into the flask.

Put the contents of the filter flask into the beaker used for the precipitation. Rinse the sides of the beaker with a further 20 ml of tartrate solution to dissolve the rest of the precipitate.

Carefully wash the crucible, adapter and filter flask with 150-200 ml water, and return the rinsing water to the beaker used for the precipitation.

3.3.4. The titration

Stir the solution using a magnetic stirrer (point 3.2.16), add a few drops of bromocresol purple (point 3.2.5) and add the dilute ammonia solution (point 3.2.9) until the colour turns violet (the solution is initially weakly acid from the residue of acetic acid used for rinsing).

Then add 10 ml standard acetate buffer (point 3.2.10), immerse the electrodes in the solution, and titrate potentiometrically with standard ‘carbate solution’ (point 3.2.11), the burette tip being immersed in the solution.

The titration rate should not exceed 2 ml/min.

The endpoint is the intersection of the tangents to the two branches of the potential curve.

It will be observed occasionally that the inflection in the potential curve becomes flattened; this can be eliminated by carefully cleaning the platinum electrode (by polishing with emery paper).

3.3.5. Blank determinations

At the same time run a blank determination through the whole procedure with 5 ml methanol and 40 ml water, according to the instructions in point 3.3.2. The blank titration should be below 1 ml, otherwise the purity of the reagents (points 3.2.3, 3.2.7, 3.2.8, 3.2.9, 3.2.10) is suspect, especially their content of heavy metals, and they must be replaced. The blank must be taken into account in the calculation of the results.

3.3.6. Control of the factor of the 'carbate solution'

Determine the factor for the carbate solution on the day of use. To do this, titrate 10 ml of the copper sulphate solution (point 3.2.12) with 'carbate solution' after the addition of 100 ml water and 10 ml standard acetate buffer (point 3.2.10). If the amount used is a ml, the factor f is:

$$f = \frac{10}{a}$$

and all the results of the titration are multiplied by this factor.

3.4. Calculation of results

Every non-ionic surfactant has its own factor, depending on its composition, particularly on the length of the alkene oxide chain. The concentration of non-ionic surfactant is expressed in relation to a standard substance — a nonyl phenol with ten ethylene oxide units (NP 10) — for which the conversion factor is 0,054.

Using this factor the amount of surfactant present in the sample is found expressed as mg of NP 10 equivalent, as follows:

(b — c) xfx 0,054 = mg non-ionic surfactant as NP 10

where:

| | | |
|---|---|---|
| b | = | volume of ‘carbate solution’ used by the sample (ml), |
| c | = | volume of ‘carbate solution’ used by the blank (ml), |
| f | = | factor of the ‘carbate solution’. |

3.5. Expression of results

Express the results in mg/l as NP 10 to the nearest 0,1.

*Figure 1 Activated sludge plant: overviews*

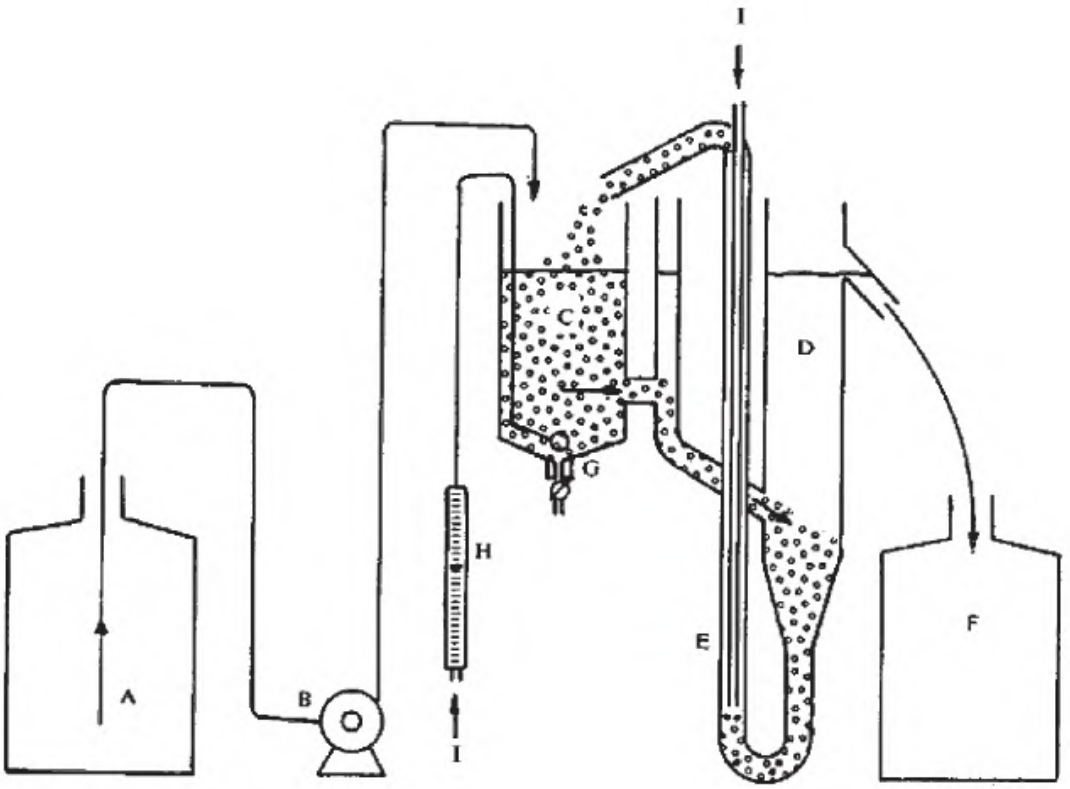


| | |
|---|---|
| A | Storage vessel |
| B | Dosing device |
| C | Aeration chamber (three litres capacity) |
| D | Settling vessel |
| E | Air-lift pump |
| F | Collector |
| G | Sintered aerator |
| H | Air-flow meter |
| I | Air |

*Figure 2 Activated sludge plant: detail (dimensions in millimetres)*

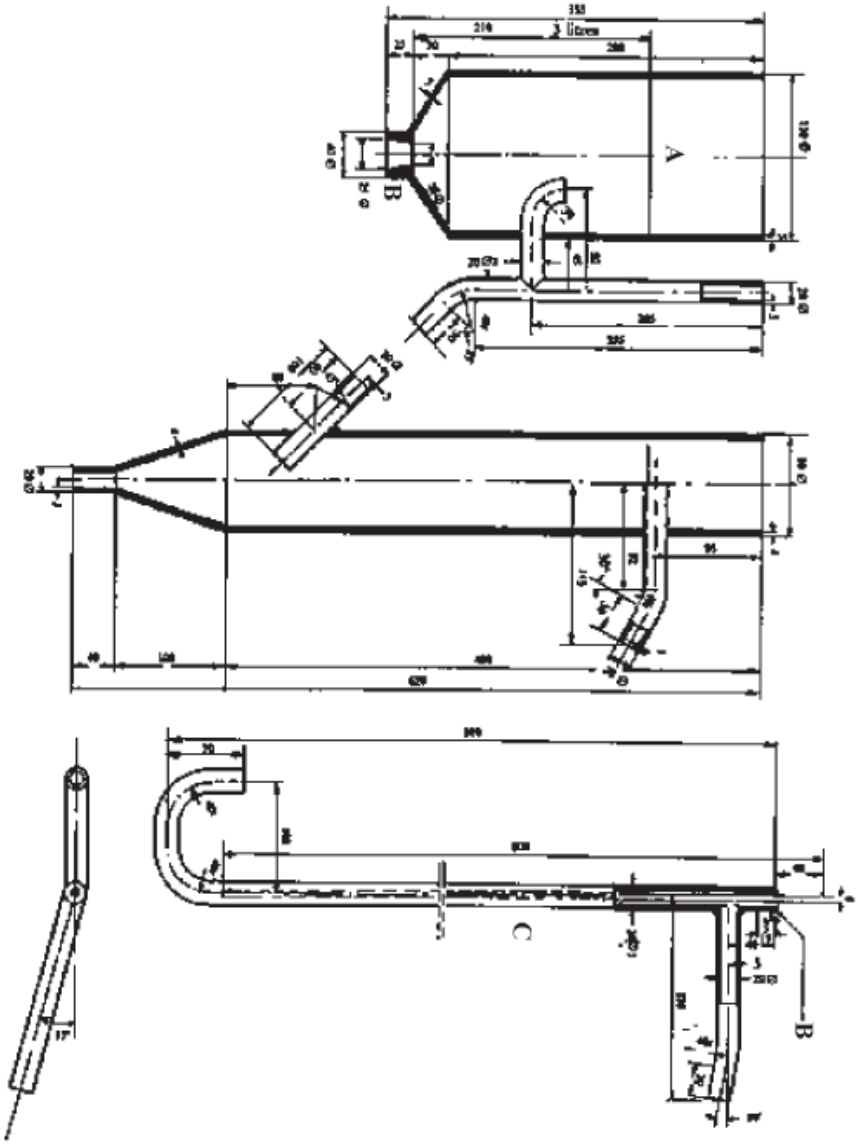

| | |
|---|---|
| A | Liquid level |
| B | Hard PVC |
| C | Glass or waterproof plastic (hard PVC) |

*Figure 3 Calculation of biodegradability - Confirmatory test*

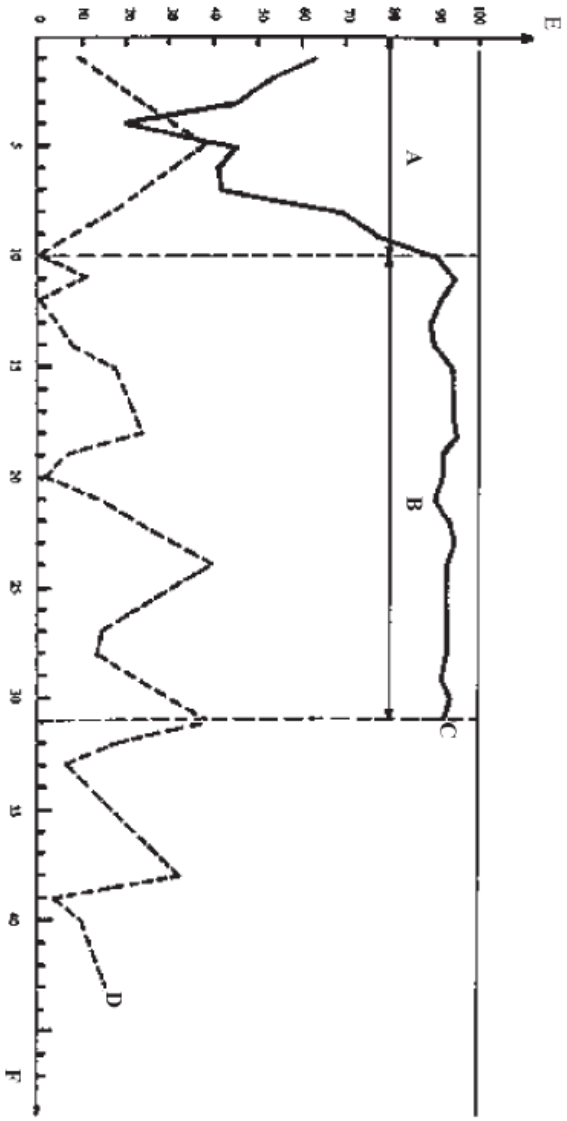


| | |
|---|---|
| A | Running-in period |
| B | Period used for calculation (twenty-one days) |
| C | Readily biodegradable surfactant |
| D | Surfactant not readily biodegradable |
| E | Biodegradation ( %) |
| F | Time (days) |

## ANNEX VIII

## CORRELATION TABLE

| Regulation (EC) No 648/2004 | This Regulation |
|---|---|
| **Article 1(1)** | Article 1(1) |
| **Article 1(2)** | - |
| **Article 2(1)** | Article 2, point (1) |
| **Article 2(1a)** | Article 2, point (2) |
| **Article 2(1b)** | Article 2, point (3) |
| **Article 2(2)** | - |
| **Article 2(3)** | Article 2, point (6) |
| **Article 2(4)** | Article 2, point (7) |
| **Article 2(5)** | Article 2, point (8) |
| **Article 2(6)** | Article 2, point (11) |
| **Article 2(7)** | - |
| **Article 2(8)** | Article 2, point (12) |
| **Article 2(9)** | Article 2, point (14) |
| **Article 2(9a)** | Article 2, point (13) |
| **Article 2(10)** | Article 2, point (15) |
| **Article 2(11)** | - |
| **Article 2(12)** | Article 2, point (5) |
| **Article 3(1)** | Article 3(1) and Article 4(2) |
| **Article 3(2)** | - |
| **Article 3(3)** | Article 7(1) |
| **Article 4(1)** | Article 4(1) |
| **Article 4(2)** | - |
| **Article 4(3)** | - |
| **Article 4a** | Article 6 |
| **Article 5(1)** | - |
| **Article 5(2)** | - |
| **Article 5(3)** | - |
| **Article 5(4)** | - |
| **Article 5(5)** | - |
| **Article 5(6)** | - |

| | |
|---|---|
| **Article 6(1)** | - |
| **Article 6(2)** | - |
| **Article 6(3)** | - |
| **Article 6(4)** | - |
| **Article 7** | - |
| **Article 8(1)** | - |
| **Article 8(2)** | - |
| **Article 8(3)** | - |
| **Article 8(4)** | - |
| **Article 9(1)** | Article 8(2) |
| **Article 9(2)** | - |
| **Article 9(3)** | Article 7(6) |
| **Article 10(1)** | - |
| **Article 10(2)** | Article 22(2) |
| **Article 11(1)** | Article 1(2), point (b) |
| **Article 11(2) and (3)** | Article 15(3) |
| **Article 11(4)** | Article 15(4) |
| **Article 11(5)** | Article 15(5) |
| **Article 11(6)** | - |
| **Article 12** | Article 28 |
| **Article 13** | Article 26 |
| **Article 13a(1)** | Article 27(1) |
| **Article 13a(2)** | Article 27(2) |
| **Article 13a(3)** | Article 27(3) |
| **Article 13a(4)** | Article 27(5) |
| **Article 13a(5)** | Article 27(6) |
| ~~**Article 14(1)**~~ | Article 3(2) |
| ~~**Article 14(2)**~~ | - |

| | |
|---|---|
| ~~**Article 14(3)**~~ | - |
| ~~**Article 14(4)**~~ | - |
| ~~**Article 14(5)**~~ | - |
| **Article 15(1), first subparagraph** | Article 24(1) |
| **Article 15(1), second subparagraph** | Article 24(3) |
| **Article 15(2)** | Article 25(4) |
| **Article 16(1)** | - |
| **Article 16(2)** | - |
| **Article 17** | Article 33 |
| **Article 18** | Article 29 |
| **Article 19** | Article 35 |