Regulation No 16 of the Economic Commission for Europe of the United Nations (UN/ECE) — Uniform provisions concerning the approval of:

I. **safety-belts, restraint systems, child restraint systems and Isofix child restraint systems for occupants of power-driven vehicles**

II. **vehicles equipped with safety-belts, restraint systems, child restraint systems and Isofix child restraint systems**

Addendum 15: Regulation No 16

Revision 5

Only the original UN/ECE texts have legal effect under international public law. The status and date of entry into force of this Regulation should be checked in the latest version of the UN/ECE status document TRANS/WP.29/343, available at: http://www.unece.org/trans/main/wp29/wp29wgs/wp29gen/wp29fdocstts.html.

Incorporating all valid text up to:

Supplement 17 to the 04 series of amendments — Date of entry into force: 18 January 2006

CONTENTS

REGULATION

1. Scope
2. Definitions
3. Application for approval
4. Markings
5. Approval
6. Specifications
7. Tests
8. Requirements concerning the installation in the vehicle
9. Conformity of production
10. Penalties for non-conformity of production
11. Modifications and extension of approval of the vehicle type or safety-belt or restraint system type
12. Production definitely discontinued
13. Instructions
14. Names and addresses of technical services responsible for conducting approval tests, and of administrative departments
15. Transitional provisions

ANNEXES

Annex 1A: Communication concerning the approval or extension or refusal or withdrawal of approval or production definitely discontinued of a vehicle type with regard to safety-belt pursuant to Regulation No 16
Annex 1B: Communication concerning the approval or extension or refusal or withdrawal of approval or production definitely discontinued of a type of safety-belt or restraint system for adult occupants of power-driven vehicles pursuant to Regulation No 16
Annex 2: Arrangements of the approval marks
Annex 3: Diagram of an apparatus to test durability of retractor mechanism
Annex 4: Diagram of an apparatus to test locking of emergency locking retractors
Annex 5: Diagram of an apparatus for dust-resistance test
Annex 6: Description of trolley, seat, anchorages and stopping device
Annex 7: Description of manikin
Annex 8: Description of curve of trolley's deceleration as a function of time
Annex 9: Instructions
Annex 10: Dual buckle test
Annex 11: Abrasion and microslip test
Annex 12: Corrosion test
Annex 13: Order of tests
Annex 14: Control of conformity of production
Annex 15: Procedure for determining the 'H' point and the actual torso angle for seating positions in motor vehicles
Appendix 1 — Description of the three dimensional 'H' point machine
Appendix 2 — Three-dimensional reference system
Appendix 3 — Reference data concerning seating positions

Annex 16: Safety-belt installation showing the belt types and retractor types
Annex 17: Requirements for the installation of safety-belts and restraint systems for adult occupants of power-driven vehicles on forward facing seats and for the installation of Isofix child restraint systems
Appendix 1 — Provisions concerning the installation of 'universal' category child restraint systems installed with the safety-belt equipment of the vehicle
Appendix 2 — Table of vehicle handbook information on child restraint suitability for various seating positions
Appendix 3 — Table of vehicle handbook information on child restraint systems installation suitability for various seating positions

1. SCOPE

This Regulation applies to safety-belts and restraint systems which are designed for installation in vehicles and are intended for separate use, i.e. as individual fittings, by persons of adult build occupying forward or rearward-facing seats. It also applies to child restraint systems and ISOFIX child restraint systems designated for installation in vehicles of category M1 and N1 (*).

2. DEFINITIONS

2.1. **Safety-belt (seat-belt, belt)**

An arrangement of straps with a securing buckle, adjusting devices and attachments which is capable of being anchored to the interior of a power-driven vehicle and is designed to diminish the risk of injury to its wearer, in the event of collision or of abrupt deceleration of the vehicle, by limiting the mobility of the wearer's body. Such an arrangement is generally referred to as a 'belt assembly', which term also embraces any device for absorbing energy or for retracting the belt.

The arrangement can be tested and approved as a safety-belt arrangement or as a restraint system.

2.1.1. *Lap belt*

A two-point belt which passes across the front of the wearer's pelvic region.

2.1.2. *Diagonal belt*

A belt which passes diagonally across the front of the chest from the hip to the opposite shoulder.

2.1.3. *Three-point belt*

A belt which is essentially a combination of a lap strap and a diagonal strap.

2.1.4. *S-type belt*

A belt arrangement other than a three-point belt or a lap belt.

2.1.5. *Harness belt*

A S-type belt arrangement comprising a lap belt and shoulder straps; a harness belt may be provided with an additional crotch strap assembly.

(*) As defined in the Consolidated Resolution on the Construction of Vehicles (R.E.3), Annex 7 (document TRANS/WP.29/78/Rev.1/Amend.2).

2.2. **Belt type**

Belts of different 'types' are belts differing substantially from one another; the differences may relate in particular to:

2.2.1. rigid parts (buckle, attachments, retractor, etc.);

2.2.2. the material, weave, dimensions and colour of the straps; or

2.2.3. the geometry of the belt assembly.

2.3. **Strap**

A flexible component designed to hold the body and to transmit stresses to the belt anchorages.

2.4. **Buckle**

A quick-release device enabling the wearer to be held by the belt. The buckle may incorporate the adjusting device, except in the case of a harness belt buckle.

2.5. **Belt adjusting device**

A device enabling the belt to be adjusted according to the requirements of the individual wearer and to the position of the seat. The adjusting device may be part of the buckle, or a retractor, or any other part of the safety-belt.

2.6. **Pre-loading device**

An additional or integrated device which tightens the seat-belt webbing in order to reduce the slack of the belt during a crash sequence.

2.7. 'Reference zone' means the space between two vertical longitudinal planes, 400 mm apart and symmetrical with respect to the H-point, and defined by rotation from vertical to horizontal of the head-form apparatus, described in Regulation No 21 Annex 1. The apparatus shall be positioned as described in that annex to Regulation No 21 and set to the maximum length of 840 mm.

2.8. 'Airbag assembly' means a device installed to supplement safety-belts and restraint systems in power-driven vehicles, i.e. system which, in the event of a severe impact affecting the vehicle automatically deploys a flexible structure intended to limit, by compression of the gas contained within it, the gravity of the contacts of one or more parts of the body of an occupant of the vehicle with the interior of the passenger compartment.

2.9. 'Passenger airbag' means an airbag assembly intended to protect occupant(s) in seats other than the driver's in the event of a frontal collision.

2.10. 'Child restraint' means a safety device as defined in Regulation No 44.

2.11. 'Rearward-facing' means facing in the direction opposite to the normal direction of travel of the vehicle.

2.12. **Attachments**

Parts of the belt assembly including the necessary securing components, which enable it to be attached to the belt anchorages.

2.13. **Energy absorber**

Device designed to disperse energy independently of or jointly with the strap and forming part of a belt assembly.

2.14. **Retractor**

Device to accommodate part or the whole of the strap of a safety-belt.

2.14.1. *Non-locking retractor (type 1)*

A retractor from which the strap is extracted to its full length by a small external force and which provides no adjustment for the length of the extracted strap.

2.14.2. *Manually unlocking retractor (type 2)*

A retractor requiring the manual operation of a device by the user to unlock the retractor in order to obtain the desired strap extraction and which locks automatically when the said operation ceases.

2.14.3. *Automatically locking retractor (type 3)*

A retractor allowing extraction of the strap to the desired length and which, when the buckle is fastened, automatically adjusts the strap to the wearer. Further extraction of the strap is prevented without voluntary intervention by the wearer.

2.14.4. *Emergency locking retractor (type 4)*

A retractor which during normal driving conditions does not restrict the freedom of movement by the wearer of the safety-belt. Such a device has length adjusting components which automatically adjust the strap to the wearer and a locking mechanism actuated in an emergency by:

2.14.4.1. deceleration of the vehicle (single sensitivity).

2.14.4.2. a combination of deceleration of the vehicle, movement of the webbing or any other automatic means (multiple sensitivity).

2.14.5. *Emergency locking retractor with higher response threshold (type 4N)*

A retractor of the type defined in paragraph 2.14.4, but having special properties as regards its use in vehicles of categories M2, M3, N1, N2 and N3 (*).

2.14.6. *Belt adjustment device for height*

A device enabling the position in height of the upper pillar loop of a belt to be adjusted according to the requirements of the individual wearer and the position of the seat. Such a device may be considered as a part of the belt or a part of the anchorage of the belt.

2.15. **Belt anchorages**

Parts of the vehicles structure or seat structure or any other part of the vehicle to which the safety-belt assemblies are to be secured.

(*) As defined in the Consolidated Resolution on the Construction of Vehicles (R.E.3), Annex 7 (TRANS/WP.29/78/Rev.1/Amend.2).

2.16. **Vehicle type as regards safety-belts and restraint systems**

Category of power-driven vehicles which do not differ in such essential respects as the dimensions, lines and materials of components of the vehicle structure or seat structure or any other part of the vehicle to which the safety-belts and the restraint systems are attached.

2.17. **Restraint system**

A system for a specific vehicle type or a type defined by the vehicle manufacturer and agreed by the Technical Service consisting of a seat and a belt fixed to the vehicle by appropriate means and consisting additionally of all elements which are provided to diminish the risk of injury to the wearer, in the event of an abrupt vehicle deceleration, by limiting the mobility of the wearer's body.

2.18. **Seat**

A structure which may or may not be integral with the vehicle structure complete with trim, intended to seat one adult person. The term covers both an individual seat or part of a bench seat intended to seat one person.

2.18.1. 'A front passenger seat' means any seat where the 'foremost H-point' of the seat in question is in or in front of the vertical transverse plane through the driver's R-point.

2.19. **Group of seats**

Either a bench-type seat or seats which are separate but side by side (i.e. fixed so that front seat anchorages of one of these seats are in line with the front of the rear anchorages of the other or between the anchorages of the other seat) and accommodate one or more seated adult persons.

2.20. **Bench seat**

A structure complete with trim, intended to seat more than one adult person.

2.21. **Adjustment system of the seat**

The complete device by which the seat or its parts can be adjusted to a position suited to the morphology of the seated occupant; this device may, in particular, permit of:

2.21.1. longitudinal displacement;

2.21.2. vertical displacement;

2.21.3. angular displacement.

2.22. **Seat anchorage**

The system by which the seat assembly is secured to the vehicle structure, including the affected parts of the vehicle structure.

2.23. **Seat type**

A category of seats which do not differ in such essential respects as:

2.23.1. the shape, dimensions and materials of the seat structure;

2.23.2. the types and dimensions of the seat lock adjustment and locking systems;

2.23.3. the type and dimensions of the belt anchorage on the seat, of the seat anchorage and of the affected parts of the vehicle structure.

2.24. **Displacement system of the seat**

A device enabling the seat or one of its parts to be displaced angularly or longitudinally, without a fixed intermediate position (to facilitate access by passengers).

2.25. **Locking system of the seat**

A device ensuring that the seat and its parts are maintained in any position of use.

2.26. **Enclosed buckle-release button**

A buckle-release button such that it must not be possible to release the buckle using a sphere having a diameter of 40 mm.

2.27. **Non-enclosed buckle-release button**

A buckle-release button such that it must be possible to release the buckle using a sphere having a diameter of 40 mm.

2.28. **Tension-reducing device**

A device which is incorporated in the retractor and reduces the tension of the strap automatically when the safety-belt is fastened. When it is released, such a device switches off automatically.

2.29. 'Isofix' is a system for the connection of child restraint systems to vehicles which has two vehicle rigid anchorages, two corresponding rigid attachments on the child restraint system, and a mean to limit the pitch rotation of the child restraint system.

2.30. 'Isofix child restraint system' means a child restraint system, fulfilling the requirements of Regulation No 44, which has to be attached to an Isofix anchorages system, fulfilling the requirements of Regulation No 14.

2.31. 'Isofix position' means a system which allows to install:

(a) either a universal Isofix forward facing child restraint system as defined in Regulation No 44,

(b) or a semi-universal Isofix forward facing child restraint system as defined in Regulation No 44,

(c) or a semi-universal Isofix rearward facing child restraint system as defined in Regulation No 44,

(d) or a semi-universal Isofix lateral facing position child restraint system as defined in Regulation No 44,

(e) or a specific vehicle Isofix child restraint system as defined in Regulation No 44.

2.32. 'Isofix anchorages system' means a system made up of two Isofix low anchorages, fulfilling the requirements of Regulation No 14, and which is designed for attaching an Isofix child restraint system in conjunction with an anti-rotation device.

2.33. 'Isofix low anchorage' means one 6 mm diameter rigid round horizontal bar, extending from vehicle or seat structure to accept and restrain an Isofix child restraint system with Isofix attachments.

2.34. **'Anti-rotation device'**

(a) An anti-rotation device for an Isofix universal child restraint system consists of the Isofix top-tether.

(b) An anti-rotation device for an Isofix semi-universal child restraint system consists of a top tether, the vehicle dashboard or a support leg intended to limit the rotation of the restraint during a frontal impact.

(c) For Isofix, universal and semi-universal, child restraint systems the vehicle seat itself does not constitute an anti-rotation device.

2.35. 'Isofix top tether anchorage' means a feature, fulfilling the requirements of Regulation No 14, such as a bar, located in a defined zone, designed to accept an Isofix top tether strap connector and transfer its restraint force to the vehicle structure.

2.36. A 'guidance device' is intended to help the person installing the Isofix child restraint system by physically guiding the Isofix attachments on the Isofix child restraint into correct alignment with the Isofix low anchorages to facilitate engagement.

2.37. 'Isofix marking fixture' means something that informs someone wishing to install an Isofix child restraint system of the Isofix positions in the vehicle and the position of each corresponding Isofix anchorages system.

2.38. 'Child restraint fixture' (CRF) means a fixture according to one out of the seven Isofix size classes defined in paragraph 4 of Annex 17 — Appendix 2 of this Regulation, and particularly whose dimensions are given from figure 1 to figure 7 in the previous mentioned paragraph 4. Those child restraint fixtures (CRF) are used, in this Regulation, to check what are the Isofix child restraint systems size classes which can be accommodated on the vehicle Isofix positions. Also one of the CRF, the so-called ISO/F2 (B), which is described in figure 2 of the previous mentioned paragraph 4, is used in Regulation No 14 to check the location and the possibility of access to any Isofix anchorages system.

3. APPLICATION FOR APPROVAL

3.1. **Vehicle type**

3.1.1. The application for approval of a vehicle type with regard to the installation of its safety-belts and restraint systems shall be submitted by the vehicle manufacturer or by his duly accredited representative.

3.1.2. It shall be accompanied by the undermentioned documents in triplicate and the following particulars:

3.1.2.1. Drawings of the general vehicle structure on an appropriate scale, showing the positions of the safety-belts, and detailed drawings of the safety-belts and of the points to which they are attached;

3.1.2.2. A specification of the materials used which may affect the strength of the safety-belts;

3.1.2.3. A technical description of the safety-belts;

3.1.2.4. In the case of safety-belts affixed to the seat structure;

3.1.2.5. Detailed description of the vehicle type with regard to the design of the seats, of the seat anchorages and their adjustment and locking systems;

3.1.2.6. Drawings, on an appropriate scale and in sufficient detail, of the seats, of their anchorages to the vehicle, and of their adjustment and locking systems;

3.1.3. At the opinion of the manufacturer, a vehicle representative of the vehicle type to be approved or the parts of the vehicle considered essential for the safety-belt tests by the technical service conducting approval tests shall be submitted to the service.

3.2. **Safety-belt type**

3.2.1. The application for approval of a type of safety-belt shall be submitted by the holder of the trade mark or by his duly accredited representative. In the case of restraint systems, the application for approval of a type of restraint system shall be submitted by the holder of the trade mark or by his representative or by the manufacturer of the vehicle in which it is to be installed or by his representative.

3.2.2. It shall be accompanied by:

3.2.2.1. A technical description of the belt type, specifying the straps and rigid parts used and accompanied by drawings of the parts making up the belt; the drawings must show the position intended for the approval number and the additional symbol(s) in relation to the circle of the approval mark. The description shall mention the colour of the model submitted for approval, and specify the vehicle type(s) for which this belt type is intended. In the case of retractors, installation instructions for the sensing device shall be provided; and for pre-loading devices or systems a full technical description of the construction and function including the sensing, if any, describing the method of activation and any necessary method to avoid inadvertent activation shall be provided. In the case of a restraint system the description shall include: drawings of the vehicle structure and of the seat structure, adjustment system and attachments on an appropriate scale showing the sites of the seat anchorages and belt anchorages and reinforcements in sufficient detail; together with a specification of the materials used which may affect the strength of the seat anchorages and belt anchorages; and a technical description of the seat anchorages and the belts anchorages; and a technical description of the seat anchorages and the belt anchorages. If the belt is designed to be fixed to the vehicle structure through a belt adjustment device for height, the technical description shall specify whether or not this device is considered as a part of the belt;

3.2.2.2. Six samples of the belt type, one of which is for reference purposes;

3.2.2.3. A ten-metre length of each type of strap used in the type of belt;

3.2.2.4. The technical service conducting the type-approval tests shall be entitled to request further samples.

3.2.3. In the case of restraint systems, two samples which may include two of the samples of belts required under paragraphs 3.2.2.2 and 3.2.2.3 at the option of the manufacturer, either a vehicle representative of the vehicle type to be approved, or the part or parts of the vehicle considered essential by the technical service conducting approval tests for testing the restraint system shall be submitted to the service.

4. MARKINGS

The samples of a belt type or type of restraint system submitted for approval in conformity with the provisions of paragraphs 3.2.2.2, 3.2.2.3 and 3.2.2.4 above shall be clearly and indelibly marked with the manufacturer's name, initials or trade name or mark.

5. APPROVAL

5.1. A certificate conforming to the model specified in paragraphs 5.1.1 or 5.1.2 shall be attached to the type approval certificate:

5.1.1. Annex 1A for applications referred to in paragraph 3.1;

5.1.2. Annex 1B for applications referred to in paragraph 3.2;

5.2. **Vehicle type**

5.2.1. If the vehicle submitted for approval pursuant this Regulation meets the requirements of paragraph 8 below, and of Annexes 15 and 16 to this Regulation, approval of that vehicle type shall be granted.

5.2.2. An approval number shall be assigned to each type approved. Its first two digits (at present 04) shall indicate the series of amendments incorporating the most recent major technical amendments made to the Regulation at the time of issue of the approval. The same Contracting Party shall not assign the same number to another vehicle type as defined in paragraph 2.16 above.

5.2.3. Notice of approval or of extension or refusal or withdrawal of approval or production definitely discontinued of a vehicle type pursuant to this Regulation shall be communicated to the Parties to the 1958 Agreement which apply this Regulation by means of a form conforming to the model in Annex 1A to this Regulation.

5.2.4. There shall be affixed, conspicuously and in a readily accessible place specified on the approval form, to every vehicle conforming to a vehicle type approved under this Regulation an international approval mark consisting of:

5.2.4.1. a circle surrounding the letter 'E' followed by the distinguishing number of the country which has granted approval ([1]);

5.2.4.2. the number of this Regulation, followed by the letter R, a dash and the approval number to the right of the circle prescribed in paragraph 5.2.4.1.

5.2.5. If the vehicle conforms to a vehicle type approved, under one or more other Regulations annexed to the Agreement, in the country which has granted approval under this Regulation, the symbol prescribed in paragraph 5.2.4.1 need not be repeated; in such a case the additional numbers and symbols of all the Regulations under which approval has been granted in the country which has granted approval under this Regulation shall be placed in vertical columns to the right of the symbol prescribed in paragraph 5.2.4.1.

5.2.6. The approval mark shall be clearly legible and be indelible.

5.2.7. The approval mark shall be placed close to or on the vehicle data plate affixed by the manufacturer.

5.3. **Safety-belt type**

5.3.1. If the samples of a type of belt which are submitted in conformity with the provisions of paragraph 3.2 above meet the requirements of paragraphs 4, 5.3 and 6 of this Regulation, approval shall be granted.

([1]) 1 for Germany, 2 for France, 3 for Italy, 4 for the Netherlands, 5 for Sweden, 6 for Belgium, 7 for Hungary, 8 for the Czech Republic, 9 for Spain, 10 for Serbia and Montenegro, 11 for the United Kingdom, 12 for Austria, 13 for Luxembourg, 14 for Switzerland, 15 (vacant), 16 for Norway, 17 for Finland, 18 for Denmark, 19 for Romania, 20 for Poland, 21 for Portugal, 22 for the Russian Federation, 23 for Greece, 24 for Ireland, 25 for Croatia, 26 for Slovenia, 27 for Slovakia, 28 for Belarus, 29 for Estonia, 30 (vacant), 31 for Bosnia and Herzegovina, 32 for Latvia, 33 (vacant), 34 for Bulgaria, 35 (vacant), 36 for Lithuania, 37 for Turkey, 38 (vacant), 39 for Azerbaijan, 40 for The former Yugoslav Republic of Macedonia, 41 (vacant), 42 for the European Community (Approvals are granted by its Member States using their respective ECE symbol), 43 for Japan, 44 (vacant), 45 for Australia, 46 for Ukraine, 47 for South Africa, 48 for New Zealand, 49 for Cyprus, 50 for Malta and 51 for the Republic of Korea. Subsequent numbers shall be assigned to other countries in the chronological order in which they ratify or accede to the Agreement Concerning the Adoption of Uniform Technical Prescriptions for Wheeled Vehicles, Equipment and Parts which can be Fitted and/or be Used on Wheeled Vehicles and the Conditions for Reciprocal Recognition of Approvals Granted on the Basis of these Prescriptions, and the numbers thus assigned shall be communicated by the Secretary-General of the United Nations to the Contracting Parties to the Agreement.

5.3.2. An approval number shall be assigned to each type approved. Its first two digits (at present 04 corresponding to the 04 series of amendments which entered into force on 22 December 1985) shall indicate the series of amendments incorporating the most recent major technical amendments made to the Regulation at the time of issue of the approval. The same Contracting Party may not assign the same number to another type of belt or restraint system.

5.3.3. Notice of approval or of extension or refusal of approval of a type of belt or restraint system, pursuant to this Regulation, shall be communicated to the Parties to the 1958 Agreement which apply this Regulation by means of a form conforming to the model in Annex 1B to this Regulation.

5.3.4. In addition to the marks prescribed in paragraph 4 above, the following particulars shall be affixed in a suitable space to every belt conforming to a type approved under this Regulation:

5.3.4.1. An international approval mark consisting of:

5.3.4.1.1. a circle surrounding the letter 'E' followed by the distinguishing number of the country which has granted approval ([2]);

5.3.4.1.2. an approval number;

5.3.4.2. The following additional symbol(s):

5.3.4.2.1. The letter 'A' for a three-point belt, the letter 'B' for a lap belt and the letter 'S' for special-type belts.

5.3.4.2.2. The symbols referred to in paragraph 5.3.4.2.1 above shall be supplemented by the following additional markings:

5.3.4.2.2.1. the letter 'e' for a belt with an energy absorption device;

5.3.4.2.2.2. the letter 'r' for a belt incorporating a retractor followed by the symbol (1, 2, 3, 4 or 4N) of the retractor used, in accordance with paragraph 2.14 of this Regulation, and the letter 'm' if the retractor used is an emergency locking retractor with multiple sensitivity;

5.3.4.2.2.3. the letter 'p' in the case of safety-belts with a pre-loading device;

5.3.4.2.2.4. the letter 't' in the case of a safety-belt with a retractor incorporating a tension-reducing device;

5.3.4.2.2.5. belts fitted with a type 4N retractor shall also bear a symbol consisting of a rectangle with a vehicle of category M1 crossed out, indicating that the use of this type of retractor is prohibited in vehicles of that category.

5.3.4.2.2.6. If the safety-belt is approved following the provisions of paragraph 6.4.1.3.3 of this Regulation, it shall be marked with the word 'AIRBAG' in a rectangle.

5.3.4.2.3. The symbol referred to in paragraph 5.3.4.2.1 above shall be preceded by the letter 'Z' when the safety-belt is part of a restraint system.

5.3.5. Annex 2, paragraph 2 to this Regulation gives examples of arrangements of the approval mark.

5.3.6. The particulars referred to in paragraph 5.3.4 above shall be clearly legible and be indelible, and may be permanently affixed either by means of a label or by direct marking. The label or marking shall be resistant to wear.

5.3.7. The labels referred to in paragraph 5.3.6 above may be issued either by the authority which has granted the approval or, subject to that authority's authorization, by the manufacturer.

([2]) See the footnote to paragraph 5.2.4.1.

6. SPECIFICATIONS

6.1. **General specifications**

6.1.1. Each sample submitted in conformity with paragraphs 3.2.2.2, 3.2.2.3 and 3.2.2.4 above shall meet the specifications set forth in paragraph 6 of this Regulation.

6.1.2. The belt or the restraint system shall be so designed and constructed that, when correctly installed and properly used by an occupant, its satisfactory operation is assured and it reduces the risk of bodily injury in the event of an accident.

6.1.3. The straps of the belt shall not be liable to assume a dangerous configuration.

6.1.4. The use of materials with properties of polyamide 6 as regards water retention is prohibited in all mechanical parts for which such a phenomenon is likely to have an adverse effect on their operation.

6.2. **Rigid parts**

6.2.1. *General*

6.2.1.1. The rigid parts of the safety-belt, such as buckles, adjusting devices, attachments and the like, shall not have sharp edges liable to cause wear or breakage of the straps by chafing.

6.2.1.2. All parts of the belt assembly liable to be affected by corrosion shall be suitably protected against it. After undergoing the corrosion test prescribed in paragraph 7.2, neither signs of deterioration likely to impair the proper functioning of the device nor any significant corrosion shall be visible to the unaided eye of a qualified observer.

6.2.1.3. Rigid parts intended to absorb energy or to be subjected to or to transmit a load shall not be fragile.

6.2.1.4. The rigid items and parts made of plastics of a safety-belt must be so located and installed that they are not liable, during every day use of a power-driven vehicle, to become trapped under a moveable seat or in a door of that vehicle. If any of these items and parts do not comply with the above conditions, they shall be subjected to the cold impact test specified in paragraph 7.5.4 below. After the test, if any visible cracks are present in any plastic cover or retainer of rigid item, the complete plastic part shall then be removed and the remaining assembly shall then be assessed against its continued security. If the remaining assembly is still secure, or no visible cracks are present, it will then be further assessed against the test requirements specified in paragraphs 6.2.2, 6.2.3 and 6.4.

6.2.2 *Buckle*

6.2.2.1. The buckle shall be so designed as to preclude any possibility of incorrect use. This means, *inter alia*, that it must not be possible for the buckle to be left in a partially-closed condition. The procedure for opening the buckle must be evident. The parts of the buckle likely to contact the body of the wearer shall present a section of not less than 20 cm^2 and at least 46 mm in width, measured in a plane situated at a maximal distance of 2,5 mm from the contact surface. In the case of harness belt buckles, the latter requirement shall be regarded as satisfied if the contact area of the buckle with the wearer's body is comprised between 20 and 40 cm^2.

6.2.2.2. The buckle, even when not under tension, shall remain closed whatever the position of the vehicle. It shall not be possible to release the buckle inadvertently, accidentally or with a force of less than 1 daN. The buckle shall be easy to use and to grasp; when it is not under tension and when under the tension specified in paragraph 7.8.2 below, it shall be capable of being released by the wearer with a single simple movement of one hand in one direction; in addition, in the case of belt assemblies intended to be used for the front outboard seats, except in these harness belts, it shall also be capable of being engaged by the wearer with a simple movement of one

hand in one direction. The buckle shall be released by pressing either a button or a similar device. The surface to which this pressure is applied shall have the following dimensions, with the button in the actual release position and when projected into a plane perpendicular to the button's initial direction of motion: for enclosed buttons, an area of not less than 4,5 cm^2 and a width of not less than 15 mm; for non-enclosed buttons, an area of not less than 2,5 cm^2 and a width of not less than 10 mm. The buckle release area shall be coloured red. No other part of the buckle shall be of this colour.

6.2.2.3. The buckle, when tested in accordance with paragraph 7.5.3 below, shall operate normally.

6.2.2.4. The buckle shall be capable of withstanding repeated operation and, prior to the dynamic test specified in paragraph 7.7 shall undergo 5 000 opening and closing cycles under normal conditions of use. In the case of harness belt buckles, this test may be carried out without all the tongues being introduced.

6.2.2.5. The force required to open the buckle in the test as prescribed in paragraph 7.8 below shall not exceed 6 daN.

6.2.2.6. The buckle shall be tested for strength as prescribed in paragraphs 7.5.1 and, where appropriate, 7.5.5. It must not break, be seriously distorted or become detached under the tension set up by the prescribed load.

6.2.2.7. In the case of buckles which incorporate a component common to two assemblies, the strength and release tests of paragraphs 7.7 and 7.8 shall also be carried out with the part of the buckle pertaining to one assembly being engaged in the mating part pertaining to the other, if it is possible for the buckle to be so assembled in use.

6.2.3. *Belt adjusting device*

6.2.3.1. The belt after being put on by the wearer, shall either adjust automatically to fit him or be such that the manually adjusting device shall be readily accessible to the seated wearer and shall be convenient and easy to use. It shall also allow the belt to be tightened with one hand to suit the wearer's body size and the position of the vehicle seat.

6.2.3.2. Two samples of each belt adjusting device shall be tested in accordance with the requirements of paragraph 7.3. The strap slip shall not exceed 25 mm for each sample of adjusting device and the sum of shifts for all the adjusting devices shall not exceed 40 mm.

6.2.3.3. All the adjustment devices shall be tested for strength as prescribed in paragraph 7.5.1. They must not break or become detached under the tension set up by the prescribed load.

6.2.3.4. When tested in accordance with paragraph 7.5.6, the force required to operate any manually adjusting device shall not exceed 5 daN.

6.2.4. *Attachments and belt adjustment devices for height*

The attachments shall be tested for strength as prescribed in paragraphs 7.5.1 and 7.5.2. The actual belt adjustment devices for height shall be tested for strength as prescribed in paragraph 7.5.2 of this Regulation where they have not been tested on the vehicle in application of Regulation No 14 (in its last version of amendments) relative to anchorages of safety-belts. These parts must not break or become detached under the tension set up by the prescribed load.

6.2.5. *Retractors*

Retractors shall be subjected to tests and shall fulfil the requirements specified below, including the tests for strength prescribed in paragraphs 7.5.1 and 7.5.2. (These requirements are such that they exclude non-locking retractors.)

6.2.5.1. Manually unlocking retractors

6.2.5.1.1. The strap of a safety-belt assembly equipped with a manually unlocking retractor shall not move more than 25 mm between locking positions of the reactor.

6.2.5.1.2. The strap of a safety-belt assembly shall extract from a manually unlocking retractor within 6 mm of its maximum length when a tension of not less than 1,4 daN and not more than 2,2 daN is applied to the strap in the normal direction of pull.

6.2.5.1.3. The strap shall be withdrawn from the retractor, and allowed to retract repeatedly by the method described in paragraph 7.6.1 until 5 000 cycles have been completed. The retractor shall then be subjected to the corrosion test given in paragraph 7.2 and to the dust test given in paragraph 7.6.3. It shall then satisfactorily complete a further 5 000 cycles of withdrawal and retraction. After the above tests, the retractor shall operate correctly and still meet the requirements of paragraphs 6.2.5.1.1 and 6.2.5.1.2 above.

6.2.5.2. Automatically locking retractors

6.2.5.2.1. The strap of a safety-belt assembly equipped with an automatically locking retractor shall not move more than 30 mm between locking positions of the retractor. After a rearward movement of the wearer, the belt must either remain at its initial position or return to that position automatically on subsequent forward movements of the wearer.

6.2.5.2.2. If the retractor is part of a lap belt, the retracting force of the strap shall be not less than 0,7 daN when measured in the free length between the dummy and the retractor in accordance with paragraph 7.6.4.

If the retractor is part of an upper torso restraint, the retracting force of the strap shall be not less than 0,1 daN and not more than 0,7 daN when similarly measured.

6.2.5.2.3. The strap shall be withdrawn from the retractor and allowed to retract repeatedly by the method described in paragraph 7.6.1 until 5 000 cycles have been completed. The retractor shall then be subjected to the corrosion test given in paragraph 7.2 and after that to the dust test given in paragraph 7.6.3. It shall then satisfactorily complete a further 5 000 cycles of withdrawal and retraction. After the above tests the retractor shall operate correctly and still meet the requirements of paragraphs 6.2.5.2.1 and 6.2.5.2.2 above.

6.2.5.3. Emergency locking retractors

6.2.5.3.1. An emergency locking retractor, when tested in accordance with paragraph 7.6.2, shall satisfy the conditions below. In the case of a single sensitivity, according to paragraph 2.14.4.1, only the specifications regarding deceleration of the vehicle are valid.

6.2.5.3.1.1. The locking must have occurred when the deceleration of the vehicle reaches 0,45 g ([3]) in the case of type 4 or 0,85 g in the case of type 4N retractors.

6.2.5.3.1.2. It must not lock for values of acceleration of the strap measured in the direction of the extraction of the strap of less than 0,8 g in the case of type 4 or less than 1,0 g in the case of type 4N retractors.

6.2.5.3.1.3. It must not lock when its sensing device is tilted 12° or less in any direction from the installation position specified by its manufacturer.

([3]) g = 9,81 m/s^2

6.2.5.3.1.4. It shall lock when its sensing device is tilted by more than 27° in the case of type 4 or 40° in the case of type 4N retractors in any direction from the installation position specified by its manufacturer.

6.2.5.3.1.5. In cases where the operation of a retractor depends on an external signal or power source, the design shall ensure that the retractor locks automatically upon failure or interruption of that signal or power source. However, this requirement need not be met in the case of a retractor with multiple sensitivities, provided only one sensitivity is dependent on an external signal or power source and the failure of the signal or power source is indicated to the driver by optical and/or acoustical means.

6.2.5.3.2. When tested in accordance with paragraph 7.6.2, an emergency locking retractor with multiple sensitivity, including strap sensitivity, shall comply with the specified requirements and also lock up when strap acceleration measured in the direction of unreeling is not less than 2,0 g.

6.2.5.3.3. In the case of the tests mentioned in paragraphs 6.2.5.3.1 and 6.2.5.3.2 above the amount of strap movement which may occur before the retractor locks shall not exceed 50 mm starting at the length given in paragraph 7.6.2.1. In the case of the test mentioned in paragraph 6.2.5.3.1.2 above locking must not occur during the 50 mm of strap movement starting at the length given in paragraph 7.6.2.1.

6.2.5.3.4. If the retractor is part of a lap belt, the retracting force of the strap shall be not less than 0,7 daN when measured in the free length between the dummy and the retractor in accordance with paragraph 7.6.4.

If the retractor is part of an upper torso restraint, the retracting force of the strap shall be not less than 0,1 daN and not more than 0,7 daN when similarly measured, except for a belt equipped with a tension-reducing device, in which case the minimum retracting force may be reduced to 0,05 daN only when such a device is in operation mode. If the strap passes through a guide or pulley, the retracting force shall be measured in the free length between the dummy and the guide or pulley.

If the assembly incorporates a device that upon manual or automatic operation prevents the strap from being completely retracted, such a device shall not be operated when these requirements are assessed.

If the assembly incorporates a tension-reducing device, the retracting force of the strap described in the above shall be measured with the device in operation mode and non-operation mode when these requirements are assessed before and after durability tests according to paragraph 6.2.5.3.5.

6.2.5.3.5. The strap shall be withdrawn from the retractor and allowed to retract repeatedly by the method described in paragraph 7.6.1 until 40 000 cycles have been completed. The retractor shall then be subjected to the corrosion test given in paragraph 7.2 and after that to the dust test prescribed in paragraph 7.6.3. It shall then satisfactorily complete a further 5 000 cycles (making 45 000 in all).

If the assembly incorporates a tension-reducing device, the above tests shall be conducted on condition that the tension-reducing device is in operation mode and in non-operation mode.

After the above tests, the retractor shall operate correctly and still meet the requirements of paragraphs 6.2.5.3.1, 6.2.5.3.3 and 6.2.5.3.4 above.

6.2.5.4. Retractors must fulfill, after durability test according to paragraph 6.2.5.3.5, and immediately after the retracting force measurement according to paragraph 6.2.5.3.4, all next two specifications:

6.2.5.4.1. When retractors except automatically locking retractors are tested according to paragraph 7.6.4.2, the retractors must be able to avoid any slack between torso and belt, and,

6.2.5.4.2. When the buckle is unlatched to release the tongue, the retractor alone must be able to retract strap fully.

6.2.6. *Pre-loading device*

6.2.6.1. After being submitted to corrosion testing in accordance with paragraph 7.2, the pre-loading device (including the impact sensor connected to the device by the original plugs but without any current passing through them) shall operate normally.

6.2.6.2. It shall be verified that inadvertent operation of the device does not involve any risk of bodily injury for wearer.

6.2.6.3. In the case of pyrotechnic pre-loading devices:

6.2.6.3.1. After being submitted to conditioning in accordance with paragraph 7.9.2, operation of the pre-loading device must not have been activated by temperature and the device shall operate normally.

6.2.6.3.2. Precautions shall be taken to prevent the hot gases expelled from igniting adjacent flammable materials.

6.3. **Straps**

6.3.1. *General*

6.3.1.1. The characteristics of the straps shall be such as to ensure that their pressure on the wearer's body is distributed as evenly as possible over their width and that they do not twist even under tension. They shall have energy-absorbing and energy-dispersing capacities. The straps shall have finished selvages which shall not become unravelled in use.

6.3.1.2. The width of the strap under load of 980 daN shall be not less than 46 mm. This dimension shall be measured during the breaking-strength test prescribed in paragraph 7.4.2 and without stopping the machine.

6.3.2. *Strength after room-conditioning*

In the case of the two straps samples conditioned in conformity with paragraph 7.4.1.1 the breaking load of the strap, determined as prescribed in paragraph 7.4.2 below, shall be not less than 1 470 daN. The difference between the breaking loads of the two samples shall not exceed 10 per cent of the greater of the breaking loads measured.

6.3.3. *Strength after special conditioning*

In the case of the two strap samples conditioned in conformity with one of the provisions of paragraph 7.4.1 (except 7.4.1.1) below, the breaking load of the strap shall be not less than 75 per cent of average of the loads determined in the test referred to in paragraph 6.3.2 and not less than 1 470 daN. The technical service conducting the tests may dispense with one or more of these tests if the composition of the material used or information already available renders the test or tests superfluous.

6.4. **Belt assembly or restraint system**

6.4.1. *Dynamic test*

6.4.1.1. The belt assembly or restraint system shall be subjected to a dynamic test in conformity with paragraph 7.7 below.

6.4.1.2. The dynamic test shall be performed on two belt assemblies which have not previously been under load, except in the case of belt assemblies forming part of restraint systems when the dynamic test shall be performed on the restraint systems intended for one group of seats which have not previously been under load. The buckles of the belt assemblies to be tested shall have

met the requirements of paragraph 6.2.2.4 above. In the case of safety-belts with retractors, the retractor shall have been subjected to the dust resistance test laid down in paragraph 7.6.3; in addition, in the case of safety-belts or restraint systems equipped with a pre-loading device comprising pyrotechnic means, the device shall have been subjected to the conditioning specified in paragraph 7.9.2.

6.4.1.2.1. The belts shall have undergone the corrosion test described in paragraph 7.2, after which the buckles shall be subjected to 500 additional opening and closing cycles under normal conditions of use.

6.4.1.2.2. Safety-belts with retractors shall have been subjected either to the tests described in paragraph 6.2.5.2 or to those described in paragraph 6.2.5.3. If, however, a retractor has already been subjected to the corrosion test in accordance with the provisions of paragraph 6.4.1.2.1, above, this test need not be repeated.

6.4.1.2.3. In the case of a belt intended for use with a belt adjustment device for height, as defined in paragraph 2.9.6 above, the test shall be carried out with the device adjusted in the most unfavourable position(s) chosen by the technical service responsible for testing. However, if the belt adjustment device for height is constituted by the belt anchorage, as approved in accordance with the provisions of Regulation No 14, the technical service responsible for testing may, at its discretion, apply the provisions of paragraph 7.7.1 below.

6.4.1.2.4. In the case of safety-belt with a preloading device the minimum displacement specified in paragraph 6.4.1.3.2 below may be reduced by half. For the purpose of this test, the preloading device shall be in operation.

6.4.1.2.5. In the case of a safety-belt with tension-reducing device, it shall be subjected to a durability test with such a device in operation mode according to paragraph 6.2.5.3.5 before a dynamic test. The dynamic test shall then be conducted with the tension-reducing device in operation mode.

6.4.1.3. During this test, the following requirements shall be met:

6.4.1.3.1. No part of the belt assembly or a restraint system affecting the restraint of the occupant shall break and no buckles or locking system or displacement system shall release or unlock; and

6.4.1.3.2. the forward displacement of the manikin shall be between 80 and 200 mm at pelvic level in the case of lap belts. In the case of other types of belts, the forward displacement shall be between 80 and 200 mm at pelvic level and between 100 and 300 mm at chest level. In the case of a harness belt, the minimum displacements specified above may be reduced by half. These displacements are the displacements in relation to the measurement points shown in Annex 7, figure 6 to this Regulation.

6.4.1.3.3. In the case of a safety-belt intended to be used in an outboard front seating position protected by an airbag in front of it, the displacement of the chest reference point may exceed that specified in paragraph 6.4.1.3.2 above if its speed at this value does not exceed 24 km/h.

6.4.1.4. In the case of a restraint system:

6.4.1.4.1. The movement of the chest reference point may exceed that specified in paragraph 6.4.1.3.2 above if it can be shown either by calculation or a further test that no part of the torso or the head of the manikin used in the dynamic test would have come into contact with any forward rigid part of the vehicle other than the chest with the steering assembly, if the latter meets the requirements of Regulation No 12 and provided contact does not occur at a speed higher than 24 km/h. For this assessment the seat shall be considered to be in the position specified in paragraph 7.7.1.5 below.

6.4.1.4.2. In vehicles where such devices are used, the displacement and locking systems enabling the occupants of all seats to leave the vehicle shall still be operable by hand after the dynamic test.

6.4.1.5. By way of derogation, in case of a restraint system, the displacements may be greater than those specified in paragraph 6.4.1.3.2 in the case where the upper anchorage fitted to the seat profits from the derogation provided in Regulation No 14, paragraph 7.4.

6.4.2. *Strength after abrasion conditioning*

6.4.2.1. For both samples conditioned in compliance with paragraph 7.4.1.6 below, the breaking strength shall be assessed as prescribed in paragraphs 7.4.2 and 7.5. below. It must be at least equal to 75 per cent of the breaking strength average determined during tests on unabraded straps and not less than the minimum load specified for the item being tested. Difference between breaking strength of the two samples must not exceed 20 per cent of the highest measured breaking strength. For type 1 and type 2 procedures, the breaking strength test shall be carried out on strap samples only (paragraph 7.4.2). For type 3 procedure, the breaking strength test shall be carried out on the strap in combination with the metal component involved (paragraph 7.5).

6.4.2.2. The parts of the belt assembly to be subjected to an abrasion procedure are given in the following table and the procedure types which may be appropriate for them are indicated by 'x'. A new sample shall be used for each procedure.

	Procedure 1	Procedure 2	Procedure 3
Attachment	—	—	x
Guide or pulley	—	x	—
Buckle-loop	—	x	x
Adjusting device	x	—	x
Parts sewn to the strap	—	—	x

7. TESTS

7.1. **Use of samples submitted for approval of a type of belt or restraint system (see Annex 13 to this Regulation)**

7.1.1. Two belts or restraint systems are required for the buckle inspection, the low-temperature buckle test, the low-temperature test described in paragraph 7.5.4 below where necessary, the buckle durability test, the belt corrosion test, the retractor operating tests, the dynamic test and the buckle-opening test after the dynamic test. One of these two samples shall be used for the inspection of the belt or restraint system.

7.1.2. One belt or restraint system is required for the inspection of the buckle and the strength test on the buckle, the attachment mountings, the belt adjusting devices and, where necessary, the retractors.

7.1.3. Two belts or restraint systems are required for the inspection of the buckle, the micro-slip test and the abrasion test. The belt adjusting device operating test shall be conducted on one of these two samples.

7.1.4. The sample of strap shall be used for testing the breaking strength of the strap. Part of this sample shall be preserved so long as the approval remains valid.

7.2. **Corrosion test**

7.2.1. A complete safety-belt assembly shall be positioned in a test chamber as prescribed in Annex 12 to this Regulation. In the case of an assembly incorporating a retractor, the strap shall be unwound to full length less 300 ± 3 mm. Except for short interruptions that may be necessary, for example, to check and replenish the salt solution, the exposure test shall proceed continuously for a period of 50 hours.

7.2.2. On completion of the exposure test the assembly shall be gently washed, or dipped in clean running water with a temperature not higher than 38 °C to remove any salt deposit that may have formed and then allowed to dry at room temperature for 24 hours before inspection in accordance with paragraph 6.2.1.2 above.

7.3. **Micro-slip test (see Annex 11, Figure 3 to this Regulation)**

7.3.1. The samples to be submitted to the micro-slip test shall be kept for a minimum of 24 hours in an atmosphere having a temperature of 20 ± 5 °C and a relative humidity of 65 ± 5 per cent. The test shall be carried out at a temperature between 15 and 30 °C.

7.3.2. It shall be ensured that the free section of the adjusting device points either up or down on the test bench, as in the vehicle.

7.3.3. A 5 daN load shall be attached to the lower end of the section of strap. The other end shall be subjected to a back and forth motion, the total amplitude being 300 ± 20 mm (see figure).

7.3.4. If there is a free end serving as reserve strap, it must in no way be fastened or clipped to the section under load.

7.3.5. It shall be ensured that on the test bench the strap, in the slack position, descends in a concave curve from the adjusting device, as in the vehicle. The 5 daN load applied on the test bench shall be guided vertically in such a way as to prevent the load swaying and the belt twisting. The attachment shall be fixed to the 5 daN load as in the vehicle.

7.3.6. Before the actual start of the test, a series of 20 cycles shall be completed so that the self-tightening system settles properly.

7.3.7. 1 000 cycles shall be completed at a frequency of 0,5 cycles per second, the total amplitude being 300 ± 20 mm. The 5 daN load shall be applied only during the time corresponding to a shift of 100 ± 20 mm for each half period.

7.4. **Conditioning of straps and breaking-strength test (static)**

7.4.1. *Conditioning of straps for the breaking-strength test*

Samples cut from the strap referred to in paragraph 3.2.4 above shall be conditioned as follows:

7.4.1.1. Temperature-conditioning and hygrometrics

The strap shall be kept for at least 24 hours in an atmosphere having a temperature of 20 ± 5 °C and a relative humidity of 65 ± 5 per cent. If the test is not carried out immediately after conditioning, the specimen shall be placed in a hermetically-closed receptacle until the test begins. The breaking load shall be determined within five minutes after removal of the strap from the conditioning atmosphere or from the receptacle.

7.4.1.2. Light-conditioning

7.4.1.2.1. The provisions of Recommendation ISO 105-BO2 (1978) shall apply. The strap shall be exposed to light for the time necessary to produce a contrast equal to grade 4 on the grey scale on Standard Blue Dye No 7.

7.4.1.2.2. After exposure the strap shall be kept for a minimum of 24 hours in an atmosphere having a temperature of 20 ± 5 °C and a relative humidity of 65 ± 5 per cent. If the test is not carried out immediately after conditioning the specimen shall be placed in a hermetically-closed receptacle until the test begins. The breaking load shall be determined within five minutes after removal of the strap from the conditioning installation.

7.4.1.3. Cold-conditioning

7.4.1.3.1. The strap shall be kept for a minimum of 24 hours in an atmosphere having a temperature of 20 ± 5 °C and a relative humidity of 65 ± 5 per cent.

7.4.1.3.2. The strap shall then be kept for one and a half hours on a plane surface in a low-temperature chamber in which the air temperature is - 30 ± 5 °C. It shall then be folded and the fold shall be loaded with a mass of 2 kg previously cooled to - 30 ± 5 °C. When the strap has been kept under load for 30 minutes in the same low-temperature chamber, the mass shall be removed and the breaking load shall be measured within 5 minutes after removal of the strap from the low-temperature chamber.

7.4.1.4. Heat-conditioning

7.4.1.4.1. The strap shall be kept for three hours in a heating cabinet in an atmosphere having a temperature of 60 ± 5 °C and a relative humidity of 65 ± 5 per cent.

7.4.1.4.2. The breaking load shall be determined within five minutes after removal of the strap from the heating cabinet.

7.4.1.5. Exposure to water

7.4.1.5.1. The strap shall be kept fully immersed for three hours in distilled water, at a temperature of 20 ± 5 °C, to which a trace of a wetting agent has been added. Any wetting agent suitable for the fibre under test may be used.

7.4.1.5.2. The breaking load shall be determined within 10 minutes after removal of the strap from the water.

7.4.1.6. Abrasion conditioning

7.4.1.6.1. The abrasion conditioning will be performed on every device in which the strap is in contact with a rigid part of the belt, with the exception of all adjusting devices where the micro-slip test (7.3) shows that the strap slips by less than half the prescribed value, in which case, the procedure 1 abrasion conditioning (7.4.1.6.4.1) will not be necessary. The setting on the conditioning device will approximately maintain the relative position of strap and contact area.

7.4.1.6.2. The samples shall be kept for a minimum of 24 hours in an atmosphere having a temperature of 20 ± 5 °C and relative humidity of 65 ± 5 per cent. The ambient temperature during the abrasion procedure shall be between 15 and 30 °C.

7.4.1.6.3. In the table below are listed the general conditions for each abrasion procedure.

	Load daN	Frequency Hz	Cycles Numbers	Shift mm
Procedure 1	2,5	0,5	5 000	300 ± 20
Procedure 2	0,5	0,5	45 000	300 ± 20
Procedure 3 (*)	0 to 5	0,5	45 000	—

(*) See paragraph 7.4.1.6.4.3.

The shift given in the fifth column of this table represents the amplitude of a back and forth motion applied to the strap.

7.4.1.6.4. Particular conditioning procedures

7.4.1.6.4.1. Procedure 1: for cases where the strap slides through an adjusting device.

A vertical steady load of 2,5 daN shall be maintained on one end of the strap — the other end of the strap shall be attached to a device giving the strap a horizontal back and forth motion.

The adjusting device shall be placed on the horizontal strap so that the strap remains under tension (see Annex 11, Figure 1 to this Regulation).

7.4.1.6.4.2 Procedure 2: for cases where the strap changes direction in passing through a rigid part.

During this test, the angles of the straps shall be maintained as shown in Annex 11, Figure 2, to this Regulation.

The steady load of 0,5 daN shall be maintained during the test.

For cases where the strap changes direction more than once in passing through a rigid part, the load of 0,5 daN may be increased so as to achieve the prescribed strap movement of 300 mm through that rigid part.

7.4.1.6.4.3. Procedure 3: for cases where the strap is fixed to a rigid part by sewing or similar means.

The total back and forth motion shall be 300 ± 20 mm but the 5 daN load shall only be applied during a shift of 100 ± 20 mm for each half period (see Annex 11, figure 3, to this Regulation).

7.4.2. *Test of breaking strength of strap (static test)*

7.4.2.1. The test shall be carried out each time on two new samples of strap, of sufficient length, conditioned in conformity with the provisions of paragraph 7.4.1.

7.4.2.2. Each strap shall be gripped between the clamps of a tensile-testing machine. The clamps shall be so designed as to avoid breakage of the strap at or near them. The speed of traverse shall be about 100 mm/min. The free length of the specimen between the clamps of the machine at the start of the test shall be 200 mm ± 40 mm.

7.4.2.3. When the load reaches 980 daN, the width of the strap shall be measured without stopping the machine.

7.4.2.4. The tension shall be increased until the strap breaks, and the breaking load shall be noted.

7.4.2.5. If the strap slips or breaks at or within 10 mm of either of the clamps the test shall be invalid and a new test shall be carried out on another specimen.

7.5. **Test of belt assembly components incorporating rigid parts**

7.5.1. The buckle and the adjusting device shall be connected to the tensile-testing apparatus by the parts of the belt assembly to which they are normally attached, and the load shall then build up to 980 daN.

In the case of harness belts, the buckle shall be connected to the testing apparatus by the straps which are attached to the buckle and the tongue or two tongues located in an approximately symmetrical way to the geometric centre of the buckle. If the buckle, or the adjusting device, is part of the attachment or of the common part of a three-point belt, the buckle or adjusting device shall be tested with the attachment, in conformity with paragraph 7.5.2 below, except in the case of retractors having a pulley or strap guide at the upper belt anchorage, when the load will be 980 daN and the length of strap remaining wound on the reel shall be the length resulting from locking as close as possible to 450 mm from the end of the strap.

7.5.2. The attachments and any belt adjustment devices for height shall be tested in the manner indicated in paragraph 7.5.1, but the load shall be 1 470 daN and shall, subject to the provisions of the second sentence of paragraph 7.7.1 below, be applied in the least favourable conditions likely to occur in a vehicle in which the belt is correctly installed. In the case of retractors the test is performed with the strap completely unwound from the reel.

7.5.3. Two samples of the complete belt assembly shall be placed in a refrigerated cabinet at - 10° ± 1 °C for two hours. The mating parts of the buckle shall be coupled together manually immediately after being removed from the refrigerated cabinet.

7.5.4. Two samples of complete belt assembly shall be placed in a refrigerated cabinet at - 10 °C ± 1 °C for two hours. The rigid items and parts made of plastics under test shall then be laid in turn upon a flat rigid steel surface (which has been kept with the samples in the refrigerated cabinet) placed on the horizontal surface of a compact rigid block with a mass of at least 100 kg and within 30 seconds of being removed from the refrigerated cabinet, an 18 kg steel mass shall be allowed to fall under gravity through 300 mm on to the test sample. The impact face of the 18 kg mass shall take the form of a convex surface with a hardness of at least 45 HRC having a transverse radius of 10 mm and a longitudinal radius of 150 mm placed along the centre line of the mass. One test sample shall be tested with the axis of the curved bar in line with the strap and the other sample shall be tested at 90° to the strap.

7.5.5. Buckles having parts common to two safety-belts shall be loaded in such a way as to simulate the conditions of use in the vehicle with seats in the mid position of their adjustment. A load of 1 470 daN shall be applied sumultaneously to each strap. The direction of the application of load shall be established according to paragraph 7.7.1 below. A suitable device for the test is shown in Annex 10 to this Regulation.

7.5.6. When testing a manually adjusting device, the strap shall be drawn steadily through the adjusting device, having regard for the normal conditions of use, at a rate of approximately 100 mm/s and the maximum force measured to the nearest 0,1 daN after the first 25 mm of strap movement. The test shall be carried out in both directions of strap travel through the device, the strap being cycled 10 times prior to the measurement.

7.6. **Additional tests for safety-belts with retractors**

7.6.1. *Durability of retractor mechanism*

7.6.1.1. The strap shall be withdrawn and allowed to retract for the required number of cycles at a rate of not more than 30 cycles per minute. In the case of emergency locking retractors, a snatch to lock the retractor shall be introduced at each fifth cycle.

The snatches shall occur in equal numbers at each of five different extractions, namely, 90, 80, 75, 70 and 65 per cent of the total length of the strap remaining wound on the retractor. However, where more than 900 mm is provided the above percentages shall be related to the final 900 mm of strap which can be withdrawn from the retractor.

7.6.1.2. A suitable apparatus for the tests specified in paragraph 7.6.1.1 above is shown in Annex 3 to this Regulation.

7.6.2. *Locking of emergency locking retractors*

7.6.2.1. The retractor shall be tested once for locking when the strap has been unwound to full length less 300 ± 3 mm.

7.6.2.1.1. In the case of a retractor actuated by strap movement, the extraction shall be in the direction in which it normally occurs when the retractor is installed in a vehicle.

7.6.2.1.2. When retractors are being tested for sensitivity to vehicle deceleration they shall be tested at the above extraction along two perpendicular axes, which are horizontal if the retractor is installed in a vehicle as specified by the safety-belt manufacturer. When this position is not specified, the testing authority shall consult the safety-belt manufacturer. One of these axes shall be in the direction chosen by the technical service conducting the approval test to give the most adverse conditions with respect to actuation of the locking mechanism.

7.6.2.2. A suitable apparatus for the tests specified in paragraph 7.6.2.1 above is described in Annex 4 to this Regulation. The design of any such test apparatus shall ensure that the required acceleration is given before the webbing is withdrawn out of the retractor by more than 5 mm and that the withdrawal takes place at an average rate of increase of acceleration of at least 25 g/s ([4]) and not more than 150 g/s ([4]).

7.6.2.3. To check conformity with the requirements of paragraphs 6.2.5.3.1.3 and 6.2.5.3.1.4, the retractor shall be mounted on a horizontal table and the table tilted with a speed not exceeding 2° per second until locking has occurred. The test shall be repeated with tilting in other directions to ensure that the requirements are fulfilled.

7.6.3. *Dust resistance*

7.6.3.1. The retractor shall be positioned in a test chamber as described in Annex 5 to this Regulation. It shall be mounted in an orientation similar to that in which it is mounted in the vehicle. The test chamber shall contain dust as specified in paragraph 7.6.3.2 below. A length of 500 mm of the strap shall be extracted from the retractor and kept extracted, except that it shall be subjected to 10 complete cycles of retraction and withdrawal within one or two minutes after each agitation of the dust. For a period of five hours, the dust shall be agitated every 20 minutes for five seconds by compressed air free of oil and moisture at a gauge pressure of $5{,}5 \cdot 10^5 + 0{,}5 \cdot 10^5$ Pa entering through an orifice, 1,5 ± 0,1 mm in diameter.

7.6.3.2. The dust used in the test described in paragraph 7.6.3.1 above shall consist of about 1 kg of dry quartz. The particle size distribution is as follows:

(a) passing 150 μm aperture, 104 μm wire diameter: 99 to 100 per cent;

(b) passing 105 μm aperture, 64 μm wire diameter: 76 to 86 per cent

(c) passing 75 μm aperture, 52 μm wire diameter: 60 to 70 per cent.

7.6.4. *Retracting forces*

7.6.4.1. The retracting force shall be measured with the safety-belt assembly fitted to a dummy as for the dynamic test prescribed in paragraph 7.7. The strap tension shall be measured at the point of contact with (but just clear of) the dummy while the strap is being retracted at the approximate rate of 0,6 m/min. In the case of a safety-belt with tension-reducing device, the retracting force and strap tension shall be measured with the tension-reducing device in both operation mode and non-operation mode.

7.6.4.2. Before the dynamic test described in paragraph 7.7 the seated dummy, which is clothed with a cotton shirt, shall be tilted frontward until 350 mm of the strap is withdrawn from retractor, and then released to the initial position.

7.7. **Dynamic test of belt assembly or of the restraint system**

7.7.1. The belt assembly shall be mounted on a trolley equipped with the seat and the anchorage defined in Annex 6 to this Regulation. However, if the belt assembly is intended for a specific vehicle or for specific types of vehicle, the distances between the manikin and the anchorages shall be determined by the service conducting the tests, either in conformity with the instructions for fitting supplied with the belt or in conformity with the data supplied by the manufacturer of the vehicle. If the belt is equipped with a belt adjustment device for height such as defined in paragraph 2.9.6 above, the position of the device and the means of securing it shall be the same as those of the vehicle design.

([4]) $g = 9{,}81\ m/s^2$

In that case, when the dynamic test has been carried out for a type of vehicle it need not be repeated for other types of vehicle where each anchorage point is less than 50 mm distant from the corresponding anchorage point of the tested belt. Alternatively, manufacturers may determine hypothetical anchorage positions for testing in order to enclose the maximum number of real anchorage points.

7.7.1.1. In the case of a safety-belt or restraint system forming part of an assembly for which type approval is requested as a restraint system, the safety-belt shall be mounted on the part of the vehicle structure to which the restraint system is normally fitted and this part shall be rigidly attached to the test trolley in the way prescribed in paragraphs 7.7.1.2 to 7.7.1.6.

In the case of a safety-belt or restraint system with pre-loading devices relying on component parts other than those incorporated in the belt assembly itself, the belt assembly shall be mounted in conjunction with the necessary additional vehicle parts on the test trolley in the manner prescribed in paragraphs 7.7.1.2 to 7.7.1.6.

Alternatively, in the case where those devices cannot be tested on the test trolley, the manufacturer may demonstrate by a conventional frontal impact test at 50 km/h in conformity with the procedure ISO 3560 (1975) that the device complies with the requirements of the Regulation.

7.7.1.2. The method used to secure the vehicle during the test shall not be such as to strengthen the anchorages of the seats or safety-belts or to lessen the normal deformation of the structure. No forward part of the vehicle shall be present which by limiting the forward movement of the manikin excepting the foot, would reduce the load imposed on the restraint system during the test. The parts of the structure eliminated can be replaced by parts of equivalent strength provided they do not hinder the forward movement of the manikin.

7.7.1.3. A securing device shall be regarded as satisfactory if it produces no effect on an area extending over the whole width of the structure and if the vehicle or the structure is blocked or fixed in front at a distance of not less than 500 mm from the anchorage of the restraint system. At the rear the structure shall be secured at a sufficient distance rearwards of the anchorages to ensure that the requirements of paragraph 7.7.1.2 above are fulfilled.

7.7.1.4. The seats shall be fitted and shall be placed in the position for driving use chosen by the technical service conducting approval tests to give the most adverse conditions with respect to strength, compatible with installing the manikin in the vehicle. The positions of the seats shall be stated in the report. The seat back, if adjustable for inclination, shall be locked as specified by the manufacturer or, in the absence of any specification, to an actual seat back angle as near as possible to 25° in the case of vehicles of categories M1 and N1 as near as possible to 15° in the case of vehicles of all other categories.

7.7.1.5. For the assessment of the requirements in paragraph 6.4.1.4.1 the seat shall be regarded in its most forward driving or travelling position appropriate to the dimensions of the manikin.

7.7.1.6. All the seats of any group of seats shall be tested simultaneously.

7.7.1.7. The dynamic tests of the harness belt system shall be carried out without the crotch strap (assembly), if there is any.

7.7.2. The belt assembly shall be attached to the manikin in Annex 7 to this Regulation as follows: a board 25 mm thick shall be placed between the back of the manikin and the seat back. The belt shall be firmly adjusted to the manikin. The board shall then be removed so that the entire length of its back is in contact with the seat back. A check shall be made to ensure that the mode of engagement of the two parts of the buckle entails no risk of reducing the reliability of locking.

7.7.3. The free ends of the straps shall extend sufficiently far beyond the adjusting devices to allow for slip.

7.7.4. The trolley shall then be so propelled that at the moment of impact its free running speed is 50 km/h ± 1 km/h and the manikin remains stable. The stopping distance of the trolley shall be 40 cm ± 5 cm. The trolley shall remain horizontal throughout deceleration. The deceleration of the trolley shall be achieved by using the apparatus described in Annex 6 to this Regulation or any other device giving equivalent results. This apparatus shall comply with the performance specified in Annex 8 to this Regulation.

7.7.5. The trolley speed immediately before impact, the forward displacement of the manikin and the speed of the chest at a 300 mm displacement of the chest shall be measured.

7.7.6. After impact, the belt assembly or restraint system and its rigid parts shall be inspected visually, without opening the buckle, to determine whether there has been any failure or breakage. In the case of restraint systems it shall also be ascertained, after the test, whether the parts of the vehicle structure which are attached to the trolley have undergone any visible permanent deformation. If there is any such deformation this shall be taken into account in any calculation made in accordance with paragraph 6.4.1.4.1.

7.8. **Buckle-opening test**

7.8.1. For this test, belt assemblies or restraint devices which have already undergone the dynamic test in conformity with paragraph 7.7 above shall be used.

7.8.2. The belt assembly shall be removed from the test trolley without the buckle being opened. A load shall be applied to the buckle by direct traction via the straps tied to it so that all the straps are subjected to the force of $\frac{60}{n}$ daN. (It is understood that n is the number of straps linked to the buckle when it is in a locked position.) In the case where the buckle is connected to a rigid part, the load shall be applied at the same angle as the one formed by the buckle and the rigid end during the dynamic test. A load shall be applied at a speed of 400 ± 20 mm/min to the geometric centre of the buckle-release button along a fixed axis running parallel to the initial direction of motion of the button. During the application of the force needed to open the buckle, the buckle shall be held by a rigid support. The load quoted above shall not exceed the limit indicated in paragraph 6.2.2.5 above. The point of contact of the test equipment shall be spherical in form with a radius of 2,5 mm ± 0,1 mm. It shall have a polished metal surface.

7.8.3. The buckle-opening force shall be measured and any failure of the buckle noted.

7.8.4. After the buckle-opening test, the components of the belt assembly or of the restraint device which have undergone the tests prescribed in paragraph 7.7 above shall be inspected and the extent of the damage sustained by the belt assembly or restraint device during the dynamic test shall be recorded in the test report.

7.9. **Additional tests on safety-belts with pre-loading devices**

7.9.1. *Conditioning*

The pre-loading device may be separated from the safety-belt to be tested and kept for 24 hours at a temperature of 60° ± 5 °C. The temperature shall then be raised to 100° ± 5 °C for two hours. Subsequently it shall be kept for 24 hours at a temperature of - 30° ± 5 °C. After being removed from conditioning, the device shall warm up to ambient temperature. If it has been separated it shall be fitted again to the safety-belt.

7.10. **Test report**

7.10.1. The test report shall record the results of all the tests in paragraph 7 above and in particular the trolley speed, the maximum forward displacement of the manikin, the place — if it can be varied — occupied by the buckle during the test, the buckle-opening force, and any failure or breakage. If by virtue of paragraph 7.7.1 the anchorages prescribed in Annex 6 to this Regulation have not been respected, the test report shall describe how the belt assembly or the restraint system was installed and shall specify important angles and dimensions. The report shall also mention any

distortion or breakage of the buckle that has occurred during the test. In the case of a restraint system the test report shall also specify the manner of attaching the vehicle structure to the trolley, the position of the seats, and the inclination of the seat backs. If the forward displacement of the manikin has exceeded the values prescribed in paragraph 6.4.1.3.2 above, the report shall state whether the requirements of paragraph 6.4.1.4.1 have been met.

8. REQUIREMENTS CONCERNING THE INSTALLATION IN THE VEHICLE

8.1. **Vehicle equipment**

8.1.1. With the exception of folding seats (as defined in Regulation No 14) and seating intended solely for use when the vehicle is stationary, the seats of vehicles of categories M and N as defined in Annex 7 to the Consolidated Resolution (R.E.3) (*) (except those vehicles of categories M_2 and M_3 which belong to Classes I or II, according to Regulation No 36, to Class A, according to Regulation No 52 and to Classes I or II and A, according to Regulation No 107) must be equipped with safety-belts or restraint systems which satisfy the requirements of this Regulation.

8.1.2. The types of safety-belts or restraint systems for each seating position where installation is required shall be those specified in Annex 16 (with which neither non-locking retractors (para. 2.14.1) nor manually unlocking retractor (para. 2.14.2) can be used). For all seating positions where lap belts type B are specified in Annex 16 lap belts type Br3 are permitted except in the case that, in use, they retract to such an extent as to reduce comfort in a notable way after normal buckling up.

8.1.2.1. However, for outboard seating positions, other than front, of vehicles of the category N_1 shown in Annex 16 and marked with the symbol Ø, the installation of a lap belt of type Br4m or Br4Nm is allowed, where there exists a passage between a seat and the nearest side wall of the vehicle intended to permit access of passengers to other parts of the vehicle. A space between a seat and the side wall is considered as a passage, if the distance between that side wall, with all doors closed, and a vertical longitudinal plane passing through the centre line of the seat concerned — measured at the R-point position and perpendicularly to the median longitudinal plane of the vehicle — is more than 500 mm.

8.1.3. Where no safety-belts are required any type of safety-belt or restraint system conforming to this Regulation may be provided at the choice of the manufacturer. A-type belts of the types permitted in Annex 16 may be provided as an alternative to lap belts for those seating positions where lap belts are specified in Annex 16.

8.1.4. On three point belts fitted with retractors, one retractor must operate at least on the diagonal strap.

8.1.5. Except for vehicles of category M_1 an emergency locking retractor of type 4N (para. 2.14.5) may be permitted instead of a retractor of type 4 (para. 2.14.4) where it has been shown to the satisfaction of the services responsible for the tests that the fitting of a type 4 retractor would not be practical.

8.1.6. For the front outboard and the front centre seating positions shown in Annex 16 and marked with the symbol *, lap belts of the type specified on that annex shall be considered adequate where the windscreen is located outside the reference zone defined in Annex 1 to Regulation No 21.

As regards safety-belts, the windscreen is considered as part of the reference zone when it is capable of entering into static contact with the test apparatus according to the method described in Annex 1 of Regulation No 21.

(*) Document TRANS/WP.29/78/Rev.1/Amend.2.

8.1.7. Every seating position in Annex 16 marked with the symbol •, three-point belts of a type specified in Annex 16 shall be provided unless one of the following conditions is fulfilled, in which case two-point belts of a type specified in Annex 16 may be provided.

8.1.7.1. There is a seat or other vehicle parts conforming to paragraph 3.5 of Appendix 1 to Regulation No 80 directly in front, or

8.1.7.2. No part of the vehicle is in or, when the vehicle is in motion, capable of being in the reference zone, or

8.1.7.3. Parts of the vehicle within the said reference zone comply with the energy absorbing requirements set out in Appendix 6 of Regulation No 80.

8.1.8. With the exception of the case covered by paragraph 8.1.9, every passenger seating position which is fitted with an airbag shall be provided with a warning against the use of a rearward-facing child restraint in that seating position. The warning label, in the form of a pictogram which may include explanatory text, shall be durably affixed and located such that it is easily visible in front of a person about to install a rearward-facing child restraint on the seat in question. An example of a possible design of a pictogram is shown in Figure 1. A permanent reference should be visible at all times, in case the warning is not visible when the door is closed.

Figure 1



Colours:

— the pictogram is red
— seat, child seat and contour line of the airbag are black
— the word airbag as well as the airbag are white.

8.1.9. The requirements of paragraph 8.1.8 shall not apply if the vehicle is fitted with a mechanism which senses automatically the presence of any rearward-facing child restraint, and ensures that the airbag will not be deployed when such a child restraint system is fitted.

8.1.10. In the case of seats capable of being turned to or placed in other orientations, designed for use when the vehicle is stationary, the requirements of paragraph 8.1.1 shall only apply to those orientations designated for normal use when the vehicle is travelling on a road, in accordance with this Regulation.

8.2. **General requirements**

8.2.1. Safety-belts, restraint systems, and Isofix child restraint systems according to Table 2 of Annex 17 — Appendix 3, shall be fixed to anchorages conforming to the specifications of Regulation No 14, such as the design and dimensional characteristics, the number of anchorages, and the strength requirements.

8.2.2. The safety-belts, restraint systems, child restraint systems and Isofix child restraint systems recommended by the manufacturer according to Tables 1 and 2 of Annex 17 — Appendix 3, shall be so installed that they will work satisfactorily and reduce the risk of bodily injury in the event of an accident. In particular they shall be so installed that:

8.2.2.1. The straps are not liable to assume a dangerous configuration;

8.2.2.2. That the danger of a correctly positioned belt slipping from the shoulder of a wearer as a result of his/her forward movement is reduced to a minimum.

8.2.2.3. The risk of the strap deteriorating through contact with sharp parts of the vehicle or seat structure, child restraint systems or Isofix child restraint systems recommended by the manufacturer according to Tables 1 and 2 of Annex 17 — Appendix 3, is reduced to a minimum.

8.2.2.4. The design and installation of every safety-belt provided for each seating position shall be such as to be readily available for use. Furthermore, where the complete seat or the seat cushion and/or the seat back can be folded to permit access to rear of the vehicle or to goods or luggage compartment, after folding and restoring those seats to the seating position, the safety-belts provided for those seats shall be accessible for use or can be easily recovered from under or behind the seat, by one person, according to instructions in the vehicle users handbook, without the need for that person to have training or practice.

8.2.2.5. The technical service shall verify that, with the buckle tongue engaged in the buckle and no occupant in the seat:

8.2.2.5.1. The possible slack in the belt does not prevent the correct installation of child restraint systems recommended by the manufacturer, and

8.2.2.5.2. In the case of three-point belts, a tension of at least 50 N can be established in the lap section of the belt by external application of tension in the diagonal section of the belt.

8.3. **Special requirements for rigid parts incorporated in safety-belts or restraint systems**

8.3.1. Rigid parts, such as the buckles, adjusting devices and attachments, shall not increase the risk of bodily injury to the wearer or to other occupants of the vehicle in the event of an accident.

8.3.2. The device for releasing the buckle shall be clearly visible to the wearer and within his easy reach and shall be so designed that it cannot be opened inadvertently or accidentally. The buckle shall also be located in such a position that it is readily accessible to a rescuer needing to release the wearer in an emergency.

The buckle shall be so installed that, both when not under load and when sustaining the wearer's mass, it is capable of being released by the wearer with a single simple movement of either hand in one direction.

In the case of a safety-belts or restraint systems for front outboard seating positions, except if these are harness belts, the buckle shall also be capable of being locked in the same manner.

A check shall be made to ensure that, if the buckle is in contact with the wearer, the width of the contact surface is not less than 46 mm.

A check shall be made to ensure that, if the buckle is in contact with the wearer, the contact surface satisfies the requirements of paragraph 6.2.2.1 of this Regulation.

8.3.3. When the belt is being worn, it shall either adjust automatically to fit the wearer or be so designed that the manual adjusting device is readily accessible to the wearer when seated and is convenient and easy to use. It shall also be possible for it to be tightened with one hand to suit the build of the wearer and the position of the vehicle seat.

8.3.4. Safety-belts or restraint systems incorporating retractors shall be so installed that the retractors are able to operate correctly and stow the strap efficiently.

8.3.5. In order to inform vehicle user(s) of the provisions made for the transport of children, vehicles of categories M_1 and N_1 shall meet the information requirements of Annex 17. Any vehicle of category M_1 must be equipped with ISOFIX positions, in accordance with the relevant prescriptions of Regulation No 14.

The first ISOFIX position shall allow at least the installation of one out of the three forward-facing fixtures as defined in Appendix 2 of Annex 17; the second ISOFIX position shall allow at least the installation of one out of the three rear-facing fixtures as defined in Appendix 2 of Annex 17. For this second ISOFIX position, in case where the installation of the rear-facing fixture is not possible on the second row of seats of the vehicle due to its design, the installation of one out of the six fixtures is allowed in any position of the vehicle.

9. CONFORMITY OF PRODUCTION

The conformity of production procedures shall comply with those set out in the Agreement, Appendix 2 (E/ECE/324-E/ECE/TRANS/505/Rev.2), with the following requirements:

9.1. Every vehicle type or safety-belt or restraint system approved under this Regulation shall be so manufactured as to conform to the type approved by meeting the requirements set forth in paragraphs 6, 7 and 8 above.

9.2. The minimum requirements for conformity of production control procedures set forth in Annex 14 to this Regulation shall be complied with.

9.3. The authority which has granted type-approval may at any time verify the conformity control methods applied in each production facility. The normal frequency of these verifications shall be twice a year.

10. PENALTIES FOR NON-CONFORMITY OF PRODUCTION

10.1. The approval granted in respect of a vehicle or a type of belt or restraint system may be withdrawn if the requirement laid down in paragraph 9.1. above is not complied with, or if the safety-belt(s) or restraint system(s) selected have failed to pass the checks prescribed in paragraph 9.2. above.

10.2. If a Contracting Party to the Agreement applying this Regulation withdraws an approval it has previously granted, it shall forthwith so notify the other Contracting Parties applying this Regulation by means of a communication form conforming to the model in Annex 1A or Annex 1B to this Regulation (as appropriate).

11. MODIFICATIONS AND EXTENSION OF APPROVAL OF THE VEHICLE TYPE OR SAFETY-BELT OR RESTRAINT SYSTEM TYPE

11.1. Every modification of the vehicle type or the belt or restraint system or both shall be notified to the administrative department which approved the vehicle type or safety-belt or restraint system type. The department may then either:

11.1.1. Consider that the modifications made are unlikely to have an appreciable adverse effect and that in any case the vehicle or safety-belt or restraint system still complies with the requirements; or

11.1.2. Require a further test report from the technical service responsible for conducting the tests.

11.2. Without prejudice to the provisions of paragraph 11.1. above, a variant of the vehicle whose mass in the running order is less than that of the vehicle subjected to the approval test shall not be regarded as a modification of the vehicle type.

11.3. Confirmation or refusal of approval, specifying the alterations, shall be communicated by the procedure specified in paragraph 5.2.3. or 5.3.3. above to the Parties to the Agreement applying this Regulation.

11.4. The competent authority issuing the extension of approval shall assign a series number for such an extension and inform thereof the other parties to the 1958 Agreement applying this Regulation by means of a communication form conforming to the model in Annex 1A or 1B to this Regulation.

12. PRODUCTION DEFINITELY DISCONTINUED

If the holder of the approval completely ceases to manufacture a device approved in accordance with this Regulation, he shall so inform the authority which granted the approval. Upon receiving the relevant communication that authority shall inform thereof the other Parties to the 1958 Agreement applying this Regulation by means of a communication form conforming to the model in Annex 1A or 1B to this Regulation.

13. INSTRUCTIONS

In the case of safety-belt type supplied separately from vehicle, the packaging and installation instructions must clearly state the vehicle type(s) for which it is intended.

14. NAMES AND ADDRESSES OF TECHNICAL SERVICES RESPONSIBLE FOR CONDUCTING APPROVAL TESTS, AND OF ADMINISTRATIVE DEPARTMENTS

The Parties to the 1958 Agreement applying this Regulation shall communicate to the United Nations Secretariat the names and addresses of the technical services responsible for conducting approval tests and of the administrative departments which grant approval and to which forms certifying approval or refusal or extension or withdrawal of approval, issued in other countries, are to be sent.

15. TRANSITIONAL PROVISIONS

15.1. **Approvals of vehicle type**

15.1.1. As from the official date of entry into force of Supplement 15 to the 04 series of amendments, no Contracting Party applying this Regulation shall refuse to grant ECE approvals under this Regulation as modified by Supplement 15 to the 04 series of amendments.

15.1.2. As from 2 years after the entry into force of Supplement 15 to the 04 series of amendments to this Regulation, Contracting Parties applying this Regulation shall grant ECE approvals only if the requirements of this Regulation, as amended by Supplement 15 to the 04 series of amendments are satisfied.

15.1.3. As from 7 years after the entry into force of Supplement 15 to the 04 series of amendments to this Regulation, Contracting Parties applying this Regulation may refuse to recognize approvals which were not granted in accordance with Supplement 15 to the 04 series of amendments to this Regulation. However, existing approvals of the vehicle categories other than M_1 and which are not affected by Supplement 15 to the 04 series of amendments to this Regulation shall remain valid and Contracting Parties applying this Regulation shall continue to accept them.

15.1.3.1. However, as from 1 October 2000, for vehicles of categories M_1 and N_1, Contracting Parties applying this Regulation may refuse to recognize ECE approvals which were not granted in accordance with Supplement 8 to the 04 series of amendments to this Regulation, if the information requirements of paragraph 8.3.5 and Annex 17 are not met.

15.2. **Installation of safety-belts**

These transitional provisions only apply to the installation of safety-belts on vehicles and do not change the mark of the safety-belt.

15.2.1. As from the official date of entry into force of Supplement 12 to the 04 series of amendments, no Contracting Party applying this Regulation shall refuse to grant ECE approvals under this Regulation as modified by Supplement 12 to the 04 series of amendments.

15.2.2. Upon expiration of a period of 36 months following the official date of entry into force referred to in paragraph 15.2.1 above, the Contracting Parties applying this Regulation shall grant approval only if the vehicle type satisfies the requirements of this Regulation as amended by the Supplement 12 to the 04 series of amendments.

15.2.3. Upon the expiration of a period of 60 months following the official date of entry into force referred to in paragraph 15.2.1 above, the Contracting Parties applying this Regulation may refuse to recognize approvals not granted in accordance with Supplement 12 to the 04 series of amendments to this Regulation.

15.2.4. As from the official date of entry into force of Supplement 14 to the 04 series of amendments, no Contracting Party applying this Regulation shall refuse to grant UNECE approvals under this Regulation as modified by Supplement 14 to the 04 series of amendments.

15.2.5. As from the official date of entry into force of Supplement 16 to the 04 series of amendments, no Contracting Party applying this Regulation shall refuse to grant ECE approvals under this Regulation as modified by Supplement 16 to the 04 series of amendments.

15.2.6. Upon expiration of a period of 36 months following the official date of entry into force referred to in paragraph 15.2.4 above, the Contracting Parties applying this Regulation shall grant approval only if the vehicle type satisfies the requirements of this Regulation as amended by the Supplement 14 to the 04 series of amendments.

15.2.7. Upon the expiration of a period of 60 months following the official date of entry into force referred to in paragraph 15.2.4 above, the Contracting Parties applying this Regulation may refuse to recognize approvals not granted in accordance with Supplement 14 to the 04 series of amendments to this Regulation.

15.2.8. After 16 July 2006, the Contracting Parties applying this Regulation shall grant approval only if the vehicle type satisfies the requirements of this Regulation as amended by the Supplement 16 to the 04 series of amendments.

1.5.2.9. After 16 July 2008, the Contracting Parties applying this Regulation may refuse to recognize approvals to vehicles of category N1 not granted in accordance with Supplement 16 to the 04 series of amendments to this Regulation.

ANNEX 1A

COMMUNICATION

(Maximum format: A4 (210 × 297 mm))

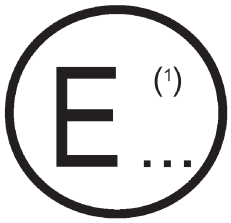

issued by: Name of administration:
.....
.....
.....

concerning (2): APPROVAL GRANTED
APPROVAL EXTENDED
APPROVAL REFUSED
APPROVAL WITHDRAWN
PRODUCTION DEFINITELY DISCONTINUED

of a vehicle type with regard to safety-belt pursuant to Regulation No 16

Approval No: ..... Extension No: .....

1. General

1.1. Make (trade name of manufacturer): .....

1.2. Type and general commercial description(s): .....

1.3. Means of identification of type, if marked on the vehicle: .....

1.3.1. Location of that marking: .....

1.4. Category of vehicle: .....

1.5. Name and address of manufacturer: .....

1.6. Address(es) of assembly plant(s): .....

2. General construction characteristics of the vehicle

2.1. Photographs and/or drawings of a representative vehicle: .....

3. Bodywork

3.1. Seats

3.1.1. Number: .....

3.1.2. Position and arrangement: .....

3.1.2.1. Seating position(s) designated for use only when the vehicle is stationary: .....

3.1.3. Characteristics: description and drawings of

3.1.3.1. the seats and their anchorages: .....

3.1.3.2. the adjustment system: .....

3.1.3.3. the displacement and locking systems: .....

3.1.3.4. the seat belt anchorages if incorporated in the seat structure: .....

(1) Distinguishing number of the country which has granted/extended/refused/withdrawn approval (see approval provisions in the Regulation).
(2) Strike out what does not apply.

3.2. Safety-belts and/or other restraint systems

3.2.1. Number and position of safety-belts and restraint systems and seats on which they can be used:.....

		Complete ECE type-approval mark	Variant (if applicable)	Belt adjustment device for height (indicate yes/no/optional)
First row of seat	R			
	C			
	L			
Second row of seat	R			
	C			
	L			

(R = right-hand seat, C = centre seat, L = left hand seat)

3.2.2. Nature and position of supplementary restraint systems (indicate yes/no/optional).

		Front airbag	Side airbag	Belt preloading device
First row of seat	R			
	C			
	L			
Second row of seat	R			
	C			
	L			

(R = right-hand seat, C = centre seat, L = left hand seat)

3.2.3. Number and position of safety-belt anchorages and proof of compliance with Regulation No 14 (i.e. ECE type-approval number or test report).

4. Place .....

5. Date .....

6. Signature .....

ANNEX 1B

COMMUNICATION

(Maximum format: A4 (210 × 297 mm))

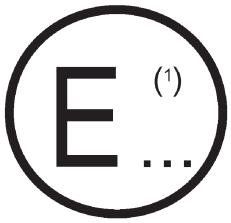

issued by : Name of administration:
.....
.....
.....

concerning (2): APPROVAL GRANTED
APPROVAL EXTENDED
APPROVAL REFUSED
APPROVAL WITHDRAWN
PRODUCTION DEFINITELY DISCONTINUED

of a type of safety-belt or restraint system for adult occupants of power-driven vehicles pursuant to Regulation No 16

Approval No..... Extension No.....

1. Restraint system (with)/three-point belt/lap belt/special type belt/fitted (with) energy absorber/retractor/device for height adjustment of the upper pillar loop (3) .....

2. Trade name or mark .....

3. Manufacturer's designation of the type of belt or restraining system.....

4. Manufacturer's name .....

5. If applicable, name of his representative .....

6. Address.....

7. Submitted for approval on.....

8. Technical service responsible for conducting approval tests.....

9. Date of test report issued by that service .....

10. Number of test report issued by that service .....

11. Approval granted/refused/extended/withdrawn (2) for general use/for use in a particular vehicle or in particular types of vehicles (2) (4) .....

12. Position and nature of the marking.....

13. Place.....

14. Date .....

15. Signature .....

16. Annexed to this communication is a list of documents in the approval file deposited at the administration services having delivered the approval and which can be obtained upon request.

———

(1) Distinguishing number of the country which has granted/extended/refused/withdrawn approval (see approval provisions in the Regulation).

(2) Strike out what does not apply.

(3) Indicate which type.

(4) If a safety-belt is approved following the provisions of paragraph 6.4.1.3.3. of this Regulation, this safety-belt shall only be installed in an outboard front seating position protected by an airbag in front of it, under the condition that the vehicle concerned is approved to Regulation No 94, 01 series of amendments or its later version in force, or to the European Community Directive 96/79/EC.

ANNEX 2

ARRANGEMENTS OF THE APPROVAL MARKS

1. Arrangements of the vehicle approval marks concerning the installation of safety-belts

Model A

(See paragraph 5.2.4. of this Regulation)

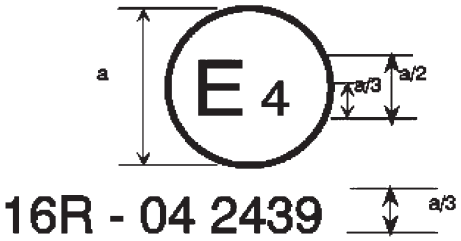

a = 8 mm min.

The above approval mark affixed to a vehicle shows that the vehicle type concerned has, with regard to safety-belts, been approved in the Netherlands (E4) pursuant to Regulation No 16. The approval number indicates that the approval was granted according to the requirements of Regulation No 16 as amended by the 04 series of amendments.

Model B

(See paragraph 5.2.5. of this Regulation)

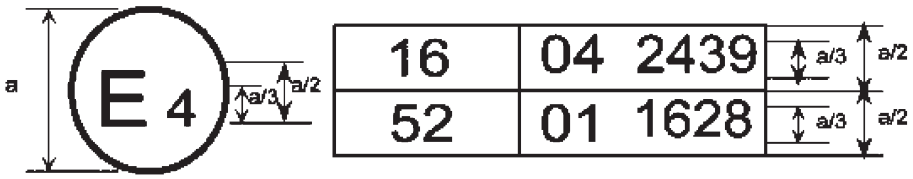

a = 8 mm min.

The above approval mark affixed to a vehicle shows that the vehicle type concerned has been approved in the Netherlands (E4) pursuant to Regulations Nos. 16 and 52. ([1]) The approval numbers indicate that, at the dates when the respective approvals were given, Regulation No 16 included the 04 series of amendments and Regulation No 52 the 01 series of amendments.

2. Arrangements of the safety-belt approval marks (See paragraph 5.3.5. of this Regulation)

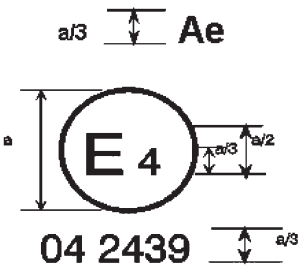

a = 8 mm min.

The belt bearing the above approval mark is a three-point belt (A), fitted with an energy absorber ('e') and approved in the Netherlands (E4) under the number 042439, the Regulation already incorporating the 04 series of amendments at the time of approval.

([1]) The second number is given merely as an example.



The belt bearing the above approval mark is a lap belt ('B'), fitted with a retractor, type 4, with multiple sensitivity (m) and approved in the Netherlands (E4) under the number 042489, the Regulation already incorporating the 04 series of amendments at the time of approval.

Note: The approval number and additional symbol(s) must be placed close to the circle and either above or below the 'E' or to left or right of that letter. The digits of the approval number must be on the same side of the 'E' and orientated in the same direction. The additional symbol(s) must be diametrically opposite the approval number. The use of roman numerals as approval numbers should be avoided so as to prevent any confusion with other symbols.



The belt bearing the above approval mark is a special type belt (S), fitted with an energy absorber (e) and approved in the Netherlands (E4) under the number 0422439, the Regulation already incorporating the 04 series of amendments at the time of approval.



The belt bearing the above approval mark is part of a restraint system (Z), it is a special type belt (S) fitted with an energy absorber (e). It has been approved in the Netherlands (E4) under the number 0424391, the Regulation already incorporating the 04 series of amendments at the time of approval.

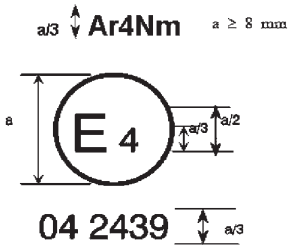

a = 8 mm min.

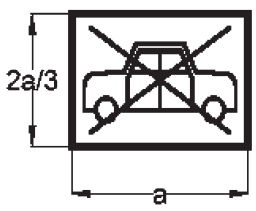

The belt bearing this type-approval mark is a three-point belt (A) with a multiple-sensitivity (m) type 4N (r4N) retractor, in respect of which type-approval was granted in the Netherlands (E4) under number 042439, the Regulation already incorporating the 04 series of amendments at the time of approval. This belt shall not be fitted to vehicles of category M_1.



The safety-belt bearing this type-approval mark is a three-point belt (A) fitted with an energy absorber (e), approved as meeting the specific requirements of paragraph 6.4.1.3.3. of this Regulation, and with a multiple-sensitivity (m) type 4 (r4) retractor, in respect of which type approval was granted in the Netherlands ('E4') under the approval number 042439. The first two digits indicate that the Regulation already incorporated the 04 series of amendments at the time of the approval. This safety-belt has to be fitted to a vehicle equipped with an airbag in the given seating position.

ANNEX 3

DIAGRAM OF AN APPARATUS TO TEST DURABILITY OF RETRACTOR MECHANISM

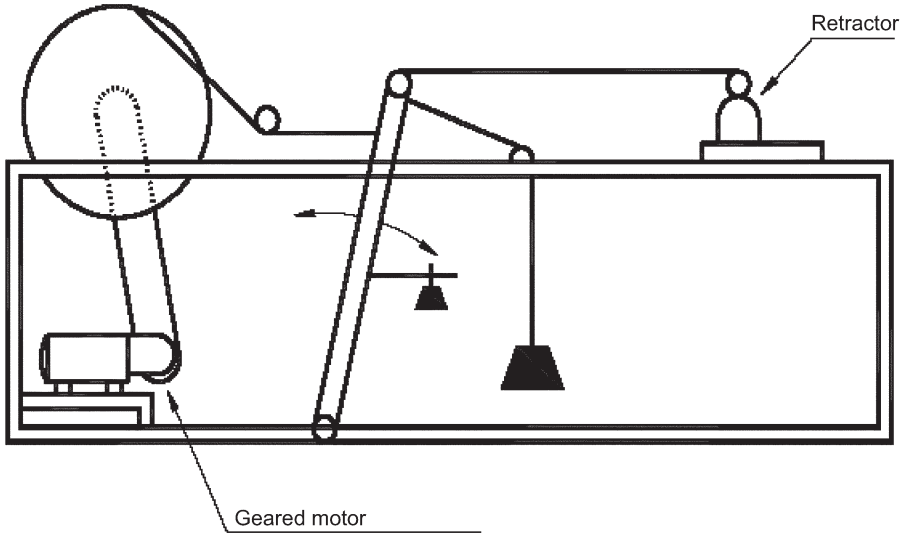

ANNEX 4

DIAGRAM OF AN APPARATUS TO TEST LOCKING OF EMERGENCY LOCKING RETRACTORS

A suitable apparatus is illustrated in the figure and consists of a motor-driven cam, the follower of which is attached by wires to a small trolley mounted on a track. The cam design and motor speed combination is such as to give the required acceleration at a rate of increase of acceleration as specified in paragraph 7.6.2.2 of this Regulation and the stroke is arranged to be in excess of the maximum permitted webbing movement before locking.

On the trolley a carrier is mounted which can be swivelled to enable the retractor to be mounted in varying positions relative to the direction of movement of the trolley.

When testing retractors for sensitivity to strap movement the retractor is mounted on a suitable fixed bracket and the strap is attached to the trolley.

When carrying out the above tests any brackets, etc. supplied by the manufacturer or his accredited representative shall be incorporated in the test installation to simulate as closely as possible the intended installation in a vehicle.

Any additional brackets, etc. that may be required to simulate the installation as intended in the vehicle shall be provided by the manufacturer or his accredited representative.

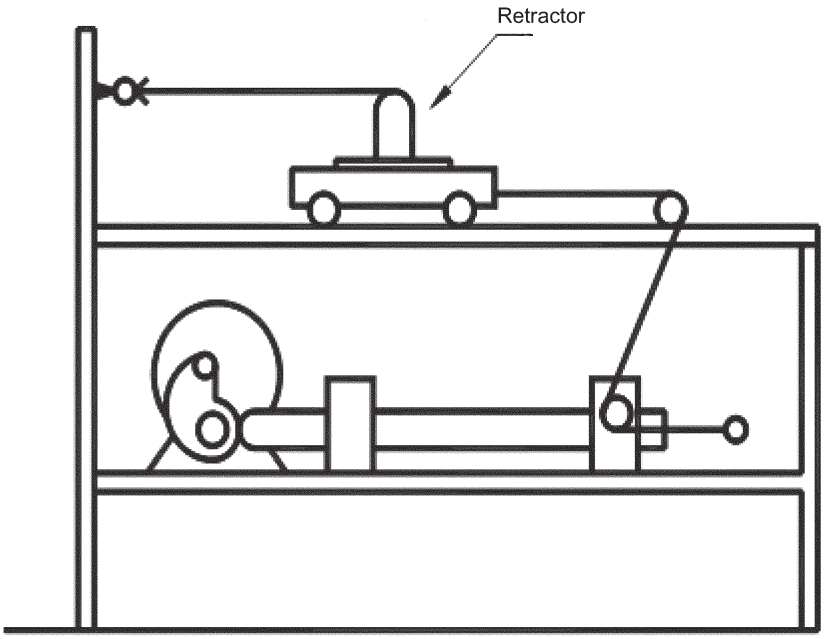

ANNEX 5

DIAGRAM OF AN APPARATUS FOR DUST-RESISTANCE TEST

(dimensions in millimetres)

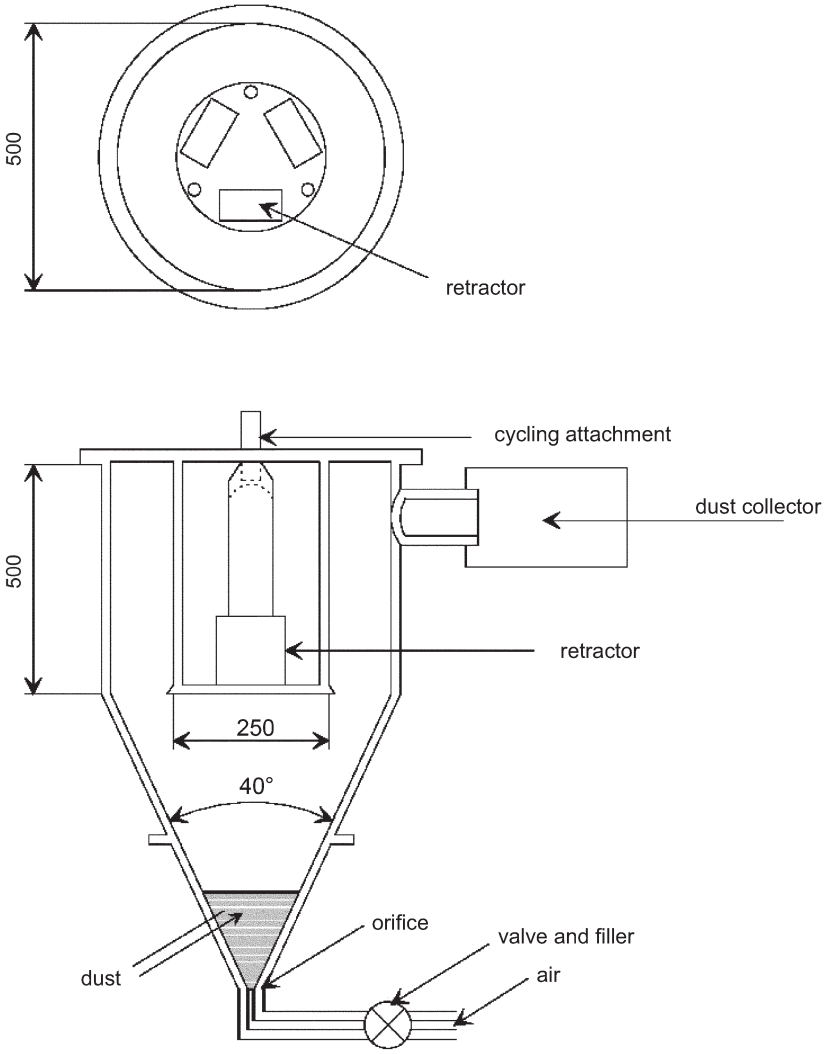

ANNEX 6

DESCRIPTION OF TROLLEY, SEAT, ANCHORAGES AND STOPPING DEVICE

1. TROLLEY

For tests on safety-belts the trolley, carrying the seat only, shall have a mass of 400 ± 20 kg. For tests on restraint systems the trolley with the attached vehicle structure shall have a mass of 800 kg. However, if necessary, the total mass of the trolley and vehicle structure may be increased by increments of 200 kg. In no case shall the total mass differ from the nominal value by more than ± 40 kg.

2. SEAT

Except in the case of tests on restraint systems, the seat shall be of rigid construction and present a smooth surface. The particulars given in figure 1 to this annex shall be respected, care being taken that no metal part can come into contact with the belt.

3. ANCHORAGES

3.1. In the case of a belt equipped with a belt adjustment device for height as defined in paragraph 29.6 of this Regulation, this device shall be secured either to a rigid frame, or to a part of the vehicle on which it is normally mounted which shall be securely fixed on the test trolley.

3.2. The anchorages shall be positioned as shown in figure 1. The marks which correspond to the arrangement of the anchorages show where the ends of the belt are to be connected to the trolley or to the load transducer, as the case may be. The anchorages for normal use are the points A, B and K if the strap length between the upper edge of the buckle and the hole for attachment of the strap support is not more than 250 mm. Otherwise, the points A1 and B1 shall be used. The tolerance on the position of the anchorage points is such that each anchorage point shall be situated at most at 50 mm from corresponding points A, B and K indicated in figure 1 or A1, B1 and K, as the case may be.

3.3. The structure carrying the anchorages shall be rigid. The upper anchorage must not be displaced by more than 0,2 mm in the longitudinal direction when a load of 98 daN is applied to it in that direction. The trolley shall be so constructed that no permanent deformation shall occur in the parts bearing the anchorages during the test.

3.4. If a fourth anchorage is necessary to attach the retractor, this anchorage:

— shall be located in the vertical longitudinal plane passing through K;

— shall enable the retractor to be tilted to the angle prescribed by the manufacturer;

— shall be located on the arc of a circle with radius KB1 = 790 mm if the length between the upper strap guide and the strap outlet at the retractor is not less than 540 mm or, in all other cases, on the arc of a circle with centre K and radius 350 mm.

4. STOPPING DEVICE

4.1. The device consists of two identical absorbers mounted in parallel, except in the case of restraint systems when four absorbers shall be used for a nominal mass of 800 kg. If necessary, an additional absorber shall be used for each 200 kg increase of nominal mass. Each absorber comprises:

— an outer casing formed from a steel tube,

— a polyurethane energy-absorber tube,

— a polished-steel olive-shaped knob penetrating into the absorber, and

— a shaft and an impact plate.

4.2. The dimensions of the various parts of this absorber are shown in the diagrams reproduced in figures 2, 3 and 4.

4.3. The characteristics of the absorbing material are given in table 1 of this annex. Immediately before each test the tubes shall be conditioned at a temperature between 15° and 25 °C for at least 12 hours without being used. During the dynamic testing of safety-belts or restraint systems, the stopping device shall be at the same temperature as during the calibration test, with a tolerance of ± 2 °C. The requirements to be met by the stopping device are given in Annex 8 to this Regulation. Any other device giving equivalent results may be used.

Table 1

Characteristics of the absorbing material

(ASTM Method D 735 unless otherwise stated)

Shore hardness A:	95 ± 2 at 20 ± 5 °C temperature
Breaking strength:	R_o > 343 daN/cm^2
Minimum elongation:	A_o > 400 per cent
Module at 100 per cent elongation:	> 108 daN/cm^2
Module at 300 per cent elongation:	> 235 daN/cm^2
Low-temperature brittleness (ASTM Method D 736):	5 hours at - 55 °C
Compression set (Method B):	22 hours at 70 °C < 45 per cent
Density at 25 °C:	between 1,05 and 1,10

Ageing in air (ASTM Method D 573)

70 hours at 100 °C
- Shore-A-hardness: max variation ± 3
- breaking strength: decrease < 10 per cent of R_o
- elongation: decrease < 10 per cent of A_o
- mass: decrease < 1 per cent

Immersion in oil (ASTM Method No 1 Oil):

70 hours at 100 °C
- Shore-A-hardness: max variation ± 4
- breaking strength: decrease < 15 per cent of R_o
- elongation: decrease < 10 per cent of A_o
- volume: swelling < 5 per cent

Immersion in oil (ASTM Method No 3 Oil):

70 hours at 100 °C
- breaking strength: decrease < 15 per cent of R_o
- elongation: decrease < 15 per cent of A_o
- volume: swelling < 20 per cent

Immersion in distilled water:

1 week at 70 °C
- breaking strength: decrease < 35 per cent of R_o
- elongation: increase < 20 per cent of A_o.

Figure 1

Trolley, seat, anchorage

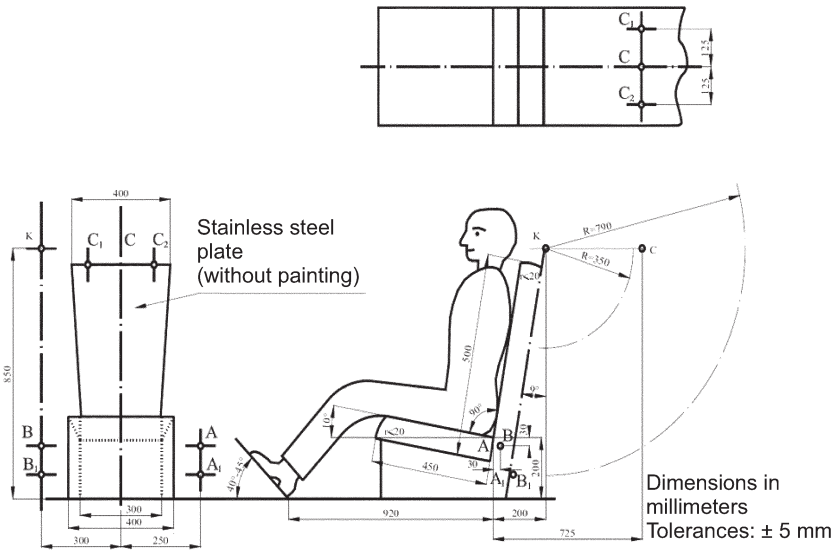

Figure 2

Stopping device

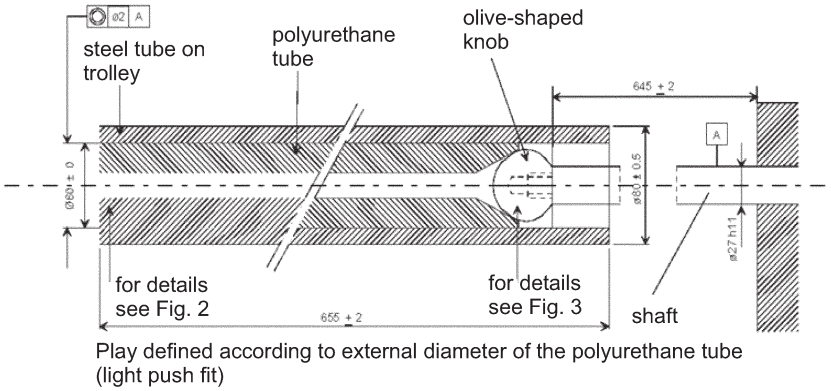

Figure 3

Stopping device

(Polyurethane tube)(Assembled)

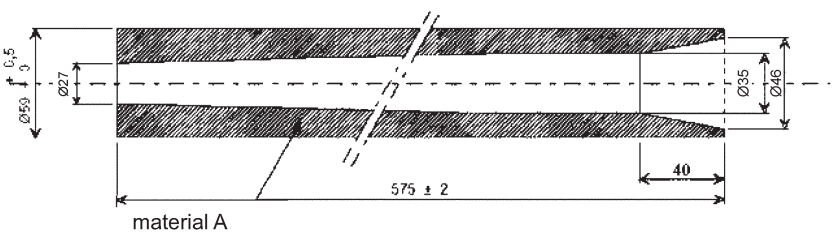

Surface finish of mandrell $\sqrt{3,2}$

Interference tolerance ± 0,2
All dimensions in mm

Figure 4

Stopping device

(Olive-shaped knob)

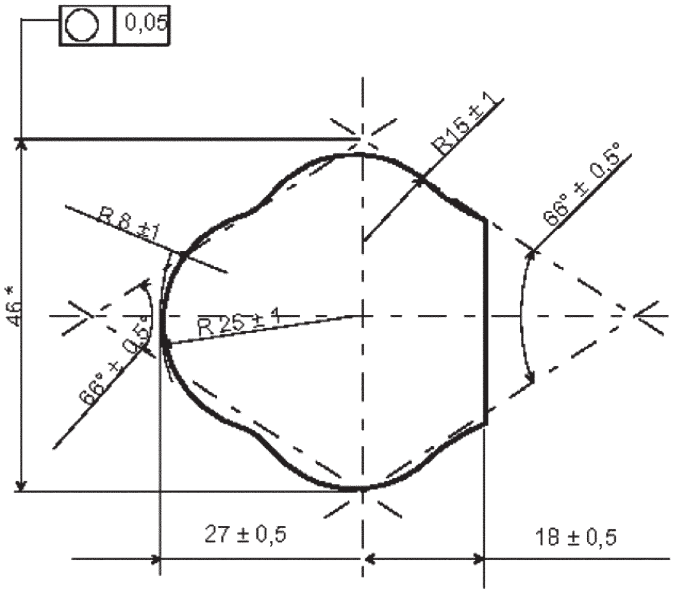

(*) This dimension can vary between 43 and 49 mm
Dimensions in mm

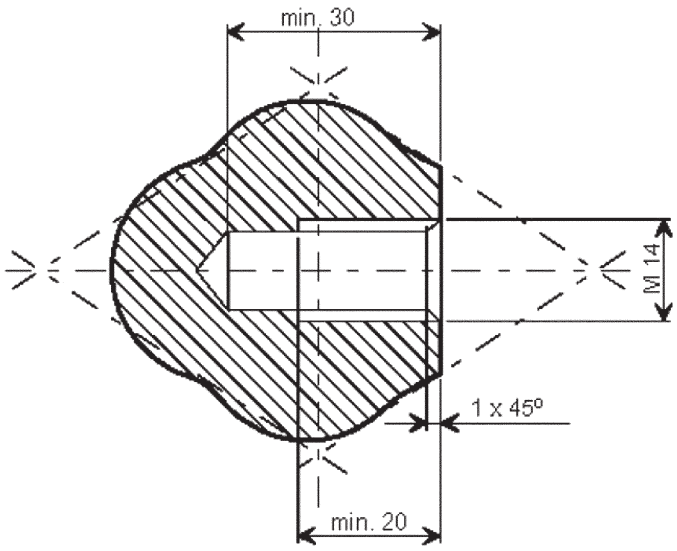

Dimensions in mm

Surface finish $\sqrt{^{0,4}}$ Interference tolerance ± 0,1

ANNEX 7

DESCRIPTION OF MANIKIN

1. SPECIFICATIONS OF THE MANIKIN

1.1. **General**

The main characteristics of the manikin are illustrated in the following figures and tables:

Figure 1 Side view of head, neck and torso;

Figure 2 Front view of head, neck and torso;

Figure 3 Side view of hip, thighs and lower leg;

Figure 4 Front view of hip, thighs and lower leg;

Figure 5 Principal dimensions;

Figure 6 Manikin in sitting position, showing:

location of the centre of gravity;

location of points at which displacement shall be measured; and

shoulder height.

Table 1 References, names, materials and principal dimensions of components of the manikin; and

Table 2 Masses of head, neck, torso, thighs and lower leg.

1.2. **Description of the manikin**

1.2.1. *Structure of the lower leg* (see Figures 3 and 4)

The structure of the lower leg consists of three components:

— a sole plate (30);

— a shin tube (29); and

— a knee tube (26).

The knee tube has two lugs which limit the movement of the lower leg in relation to the thigh.

The lower leg can be rotated rearwards 120° from the straight position.

1.2.2. *Structure of the thigh* (see Figures 3 and 4)

The structure of the thigh consists of three components:

— knee tube (22),

— a thigh bar (21), and

— a hip tube (20).

Movement of the knee is limited by two cut-outs in the knee tube (22) which engage with the lugs of the lower leg.

1.2.3. *Structure of the torso* (see Figures 1 and 2)

The structure of the torso consists of:

— a hip tube (2),

— a roller chain (4),

— ribs (6) and (7),

— a sternum (8), and

— chain attachments (3) and at parts (7) and (8).

1.2.4. *Neck* (see Figures 1 and 2)

The neck consists of seven polyurethane discs (9). The stiffness of the neck can be adjusted by means of a chain tensioner.

1.2.5. *Head* (see Figures 1 and 2)

The head (15) itself is hollow; the polyurethane form is reinforced by steel plate (17). The chain tensioner by which the neck can be adjusted consists of a polyamide block (10), a tubular spacer (11), and tensioning members (12) and (13). The head can be turned about the Atlas-Axis joint, which consists of the adjuster assembly (14) and (18), the spacer (16), and polyamide block (10).

1.2.6. *Knee joint* (see Figure 4)

The lower leg and thighs are connected by a tube (27) and a tensioner (28).

1.2.7. *Hip joint* (see Figure 4)

The thighs and torso are connected by a tube (23), friction plates (24), and tensioner assembly (25).

1.2.8. *Polyurethane*

Type: PU 123 CH Compound
Hardness: 50-60 Shore A

1.2.9. *Overalls*

The manikin is covered by a special overall (see table 1).

2. CORRECTION DEVICES

2.1. **General**

In order to calibrate the manikin to certain values and its total mass, the mass distribution are adjusted by the use of six correction steel masses of 1 kg each, which can be mounted at the hip joint. Six polyurethane weights each of 1 kg mass can be mounted in the back of the torso.

3. CUSHION

A cushion must be positioned between the chest of the manikin and the overall. This cushion shall be made of polyethylene foam of the following specification:

— Hardness: 7-10 shore A

— Thickness: 25 mm ± 5

It shall be replaceable.

4. ADJUSTMENT OF THE JOINTS

4.1. **General**

In order to achieve reproducible results, it is necessary to specify and control the friction at each joint.

4.2. **Knee joint**

Tighten the knee joint.

Set the thigh and lower leg vertical.

Rotate the lower leg through 30°.

Gradually slacken the tensioner (28) until the lower leg starts to fall under its own mass.

Lock the tensioner in this position.

4.3. **Hip joint**

Tighten the hip joint.

Place the thigh in a horizontal position and the torso in a vertical position.

Rotate the torso in a forward direction until the angle between the torso and the thigh is 60°.

Gradually slacken the tensioner until the torso starts to fall under its own mass.

Lock the tensioner in this position.

4.4. **Atlas-Axis joint**

Adjust the Atlas-Axis joint so that it just resists its own weight in the fore and aft directions.

4.5. **Neck**

The neck can be adjusted by means of the chain tensioner (13). When the neck is adjusted, the upper end of the tensioner shall displace between 4—6 cm when subjected to a horizontal load of 10 daN.

Table 1

Reference No	Name	Material	Dimensions
1	Body material	Polyurethane	—
2	Hip tube	Steel	76 × 70 × 100 mm
3	Chain attachments	Steel	25 × 10 × 70 mm
4	Roller chain	Steel	3/4
5	Shoulder plate	Polyurethane	—
6	Rolled section	Steel	30 × 30 ×3 × 250 mm
7	Ribs	Perforated steel plate	400 × 85 × 1,5 mm
8	Sternum	Perforated steel plate	250 × 90 × 1,5 mm
9	Discs (six)	Polyurethane	ø 90 × 20 mm
			ø 80 × 20 mm
			ø 75 × 20 mm
			ø 70 × 20 mm
			ø 65 × 20 mm
			ø 60 × 20 mm
10	Block	Polyamide	60 × 60 × 25 mm
11	Tubular spacer	Steel	40 × 40 × 2 × 50 mm
12	Tensioning bolt	Steel	M16 × 90 mm
13	Tensioner nut	Steel	M16

Reference No	Name	Material	Dimensions
14	Tensioner for Atlas-Axis joint	Steel	ø 12 × 130 mm (M12)
15	Head	Polyurethane	—
16	Tubular spacer	Steel	ø 18 × 13 × 17 mm
17	Reinforcement plate	Steel	30 × 3 × 500 mm
18	Tensioner nut	Steel	M12 mm
19	Thighs	Polyurethane	—
20	Hip tube	Steel	76 × 70 × 80 mm
21	Thigh bar	Steel	30 × 30 × 440 mm
22	Knee tube	Steel	52 × 46 × 40 mm
23	Hip connection tube	Steel	70 × 64 × 250 mm
24	Friction plates (four)	Steel	160 × 75 × 1 mm
25	Tensioner assembly	Steel	M12 × 320 mm +
			Plates and nuts
26	Knee tube	Steel	52 × 46 × 160
27	Knee connection tube	Steel	44 × 39 × 190 mm
28	Tensioner plate	Steel	ø 70 × 4 mm
29	Shin tube	Steel	50 × 50 × 2 × 460 mm
30	Sole plate	Steel	100 × 170 × 3 mm
31	Torso correction mass (six)	Polyurethane	Each mass 1 kg
32	Cushion	Polystyrene foam	350 × 250 × 25 mm
33	Overall	Cotton and polyamide straps	—
34	Hip correction masses (six)	Steel	Each mass 1 kg

Table 2

Components of manikin	Mass in kg
Head and neck	4,6 ± 0,3
Torso and arms	40,3 ± 1,0
Thighs	16,2 ± 0,5
Lower leg and foot	9,0 ± 0,5
Total mass including correction weights	75,5 ± 1,0

Figure 1

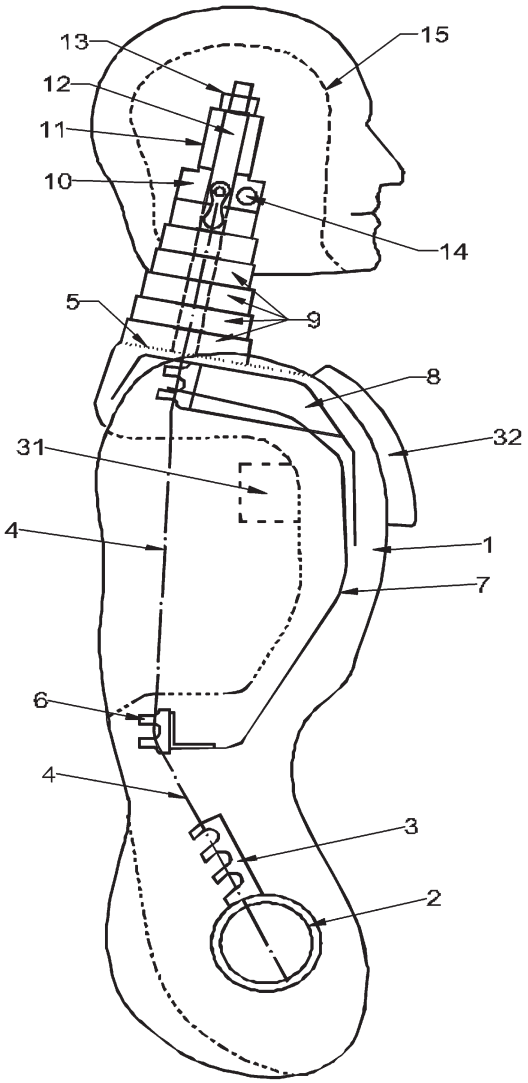

Figure 2

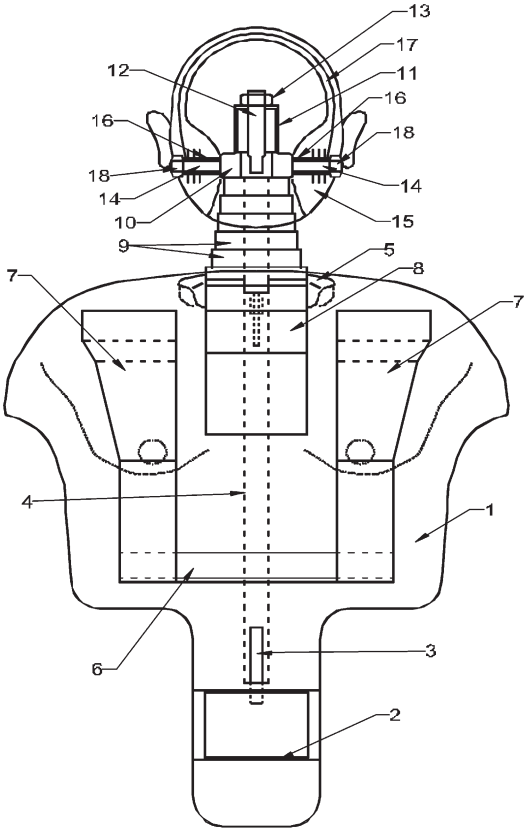

Figure 3

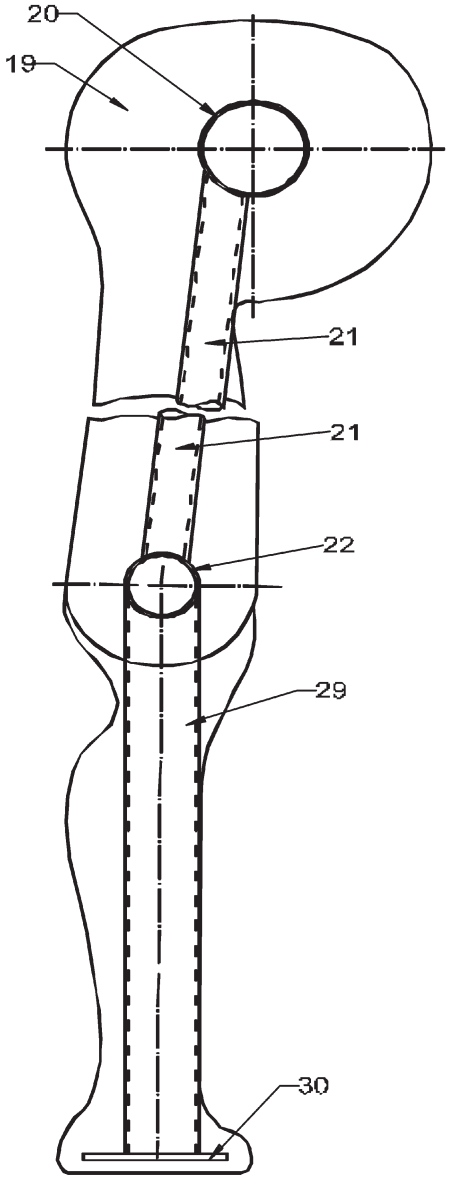

Figure 4

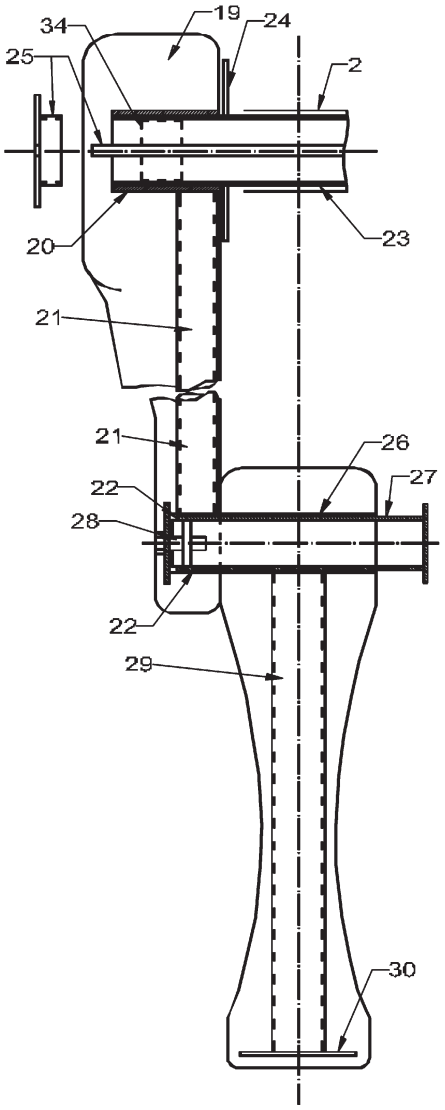

Figure 5

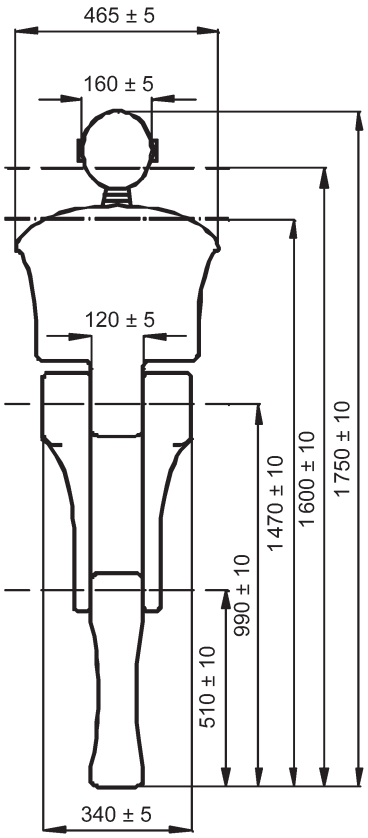

Figure 6

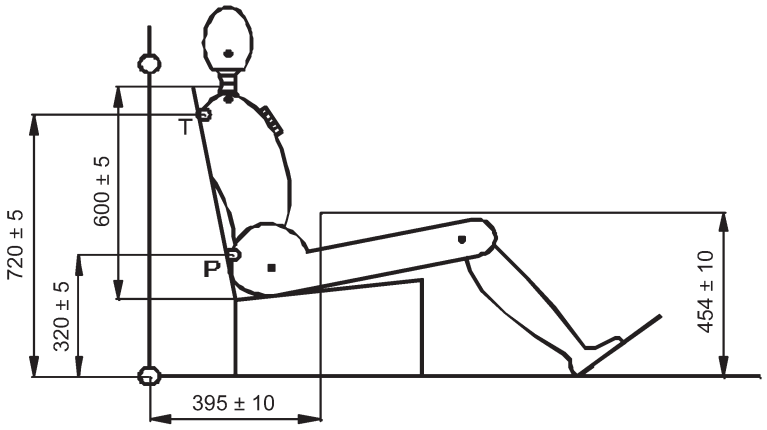

All dimensions in mm

G = centre of gravity
T = torso reference point (at the rear on the centre line of the manikin)
P = pelvis reference point (at the rear on the centre line of the manikin)

The displacement measurement at point P shall not contain rotational components around the hip axis and around a vertical axis.

ANNEX 8

DESCRIPTION OF CURVE OF TROLLEY'S DECELERATION AS A FUNCTION OF TIME

(Curve for testing stopping devices)

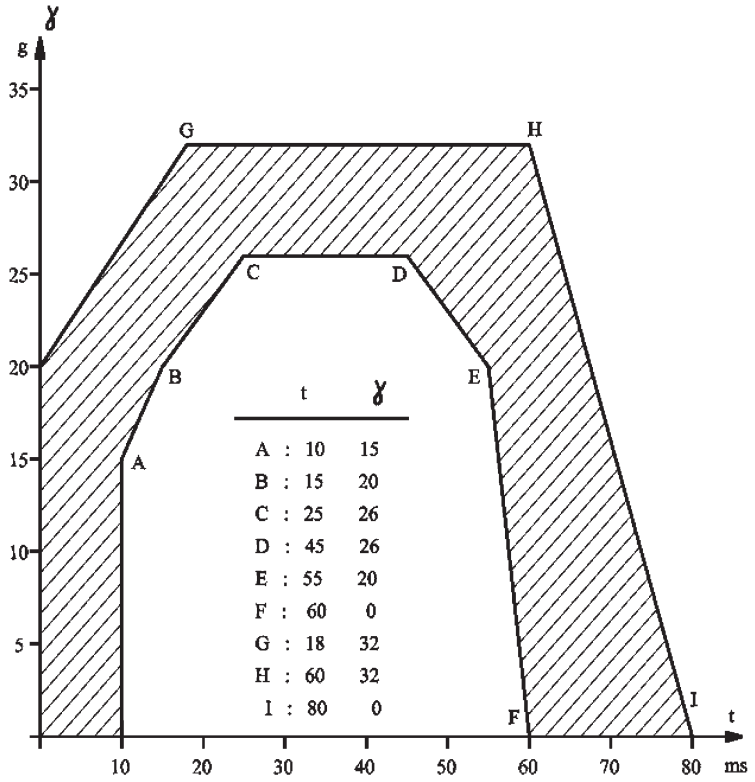

The deceleration curve of the trolley weighted with inert mass to produce a total mass of 455 kg ± 20 kg for safety-belt tests and 910 ± 40 kg for restraining system tests where the nominal mass of the trolley and vehicle structure is 800 kg must remain within the hatched area above. If necessary, the nominal mass of the trolley and attached vehicle structure can be increased by increments of 200 kg, in which case, an additional inert mass of 28 kg per increment shall be added. In no case shall the total mass of the trolley and vehicle structure and inert masses differ from the nominal value for calibration tests by more than ± 40 kg. During calibration of the stopping device, the speed of the trolley shall be 50 km/h ± 1 km/h and the stopping distance shall be 40 cm ± 2 cm. In both the above cases the calibration and measuring procedures shall correspond to those defined in the International Standard ISO 6487:1980; the measuring equipment shall correspond to the specification of a data channel with a channel frequency class (CFC) 60.

ANNEX 9

INSTRUCTIONS

Every safety-belt shall be accompanied by instructions of the following content or kind in the language or languages of the country in which it is to be placed on sale:

1. Installation instructions (not required if the vehicle manufacturer is to install the safety-belt) which specify for which vehicle models the assembly is suitable and the correct method of attachment of the assembly to the vehicle, including a warning to guard against chafing of the straps.

2. User instructions (may be included in the vehicle user's handbook if the safety-belt is installed by the vehicle manufacturer) which specify the instructions to ensure that the user obtains the greatest benefit from the safety-belt. In these instructions reference shall be made to:

   (a) the importance of wearing the assembly on all journeys;

   (b) the correct manner of wearing the belt and in particular to:

      — the intended location of the buckle;

      — the desirability of wearing belts tightly;

      — the correct positioning of the straps and the need to avoid twisting them;

      — the importance of each belt being used by one occupant only, and especially of not putting a belt around a child seated on the occupant's lap;

   (c) the method of operating the buckle;

   (d) the method of operating the adjuster;

   (e) the method of operating any retractor which may be incorporated in the assembly and the method of checking that it locks;

   (f) the recommended methods of cleaning the belt and reassembling it after cleaning where appropriate;

   (g) the need to replace the safety-belt when it has been used in a severe accident or shows signs of severe fraying or having been cut, or when, with a belt fitted with a visual overload indicator, it indicates the belt's unsuitability for further use or when a seat-belt is equipped with a pre-loading device, when the latter has been activated;

   (h) the fact that the belt must not be altered or modified in any way since such changes may render the belt ineffective, and in particular where the design permits part to be disassembled, instructions or ensure correct reassembly;

   (i) the fact that the belt is intended for use by adult-sized occupants;

   (j) the stowage of the belt when not in use.

3. In the case of safety-belts fitted with a type 4N retractor, it shall be indicated in the installation instructions and on any packaging that this belt is not suitable for installation in motor vehicles used for the carriage of passengers having not more than nine seats, including that of the driver.

4. An installation requirement for the consumer shall be provided by the manufacturer/applicant for all vehicles where the crotch strap assembly can be used. The manufacturer of the harness belt shall prescribe the mounting of the additional reinforcement elements for the anchorages of crotch straps and their installation in all vehicles where an installation is provided for.

ANNEX 10

DUAL BUCKLE TEST

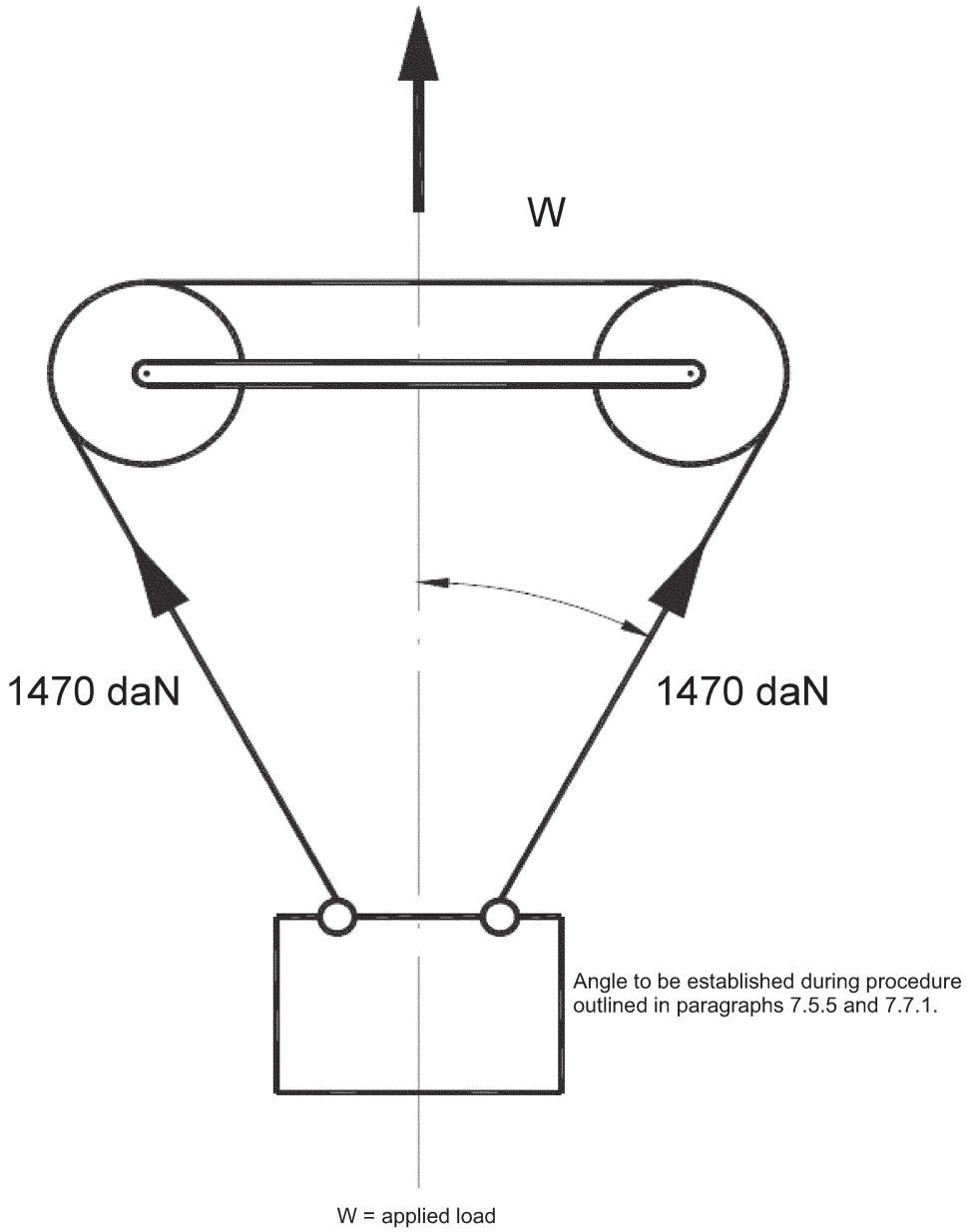

ANNEX 11

ABRASION AND MICROSLIP TEST

Figure 1:

Type I procedure

Examples of test arrangements corresponding to the type of adjusting device

Example a

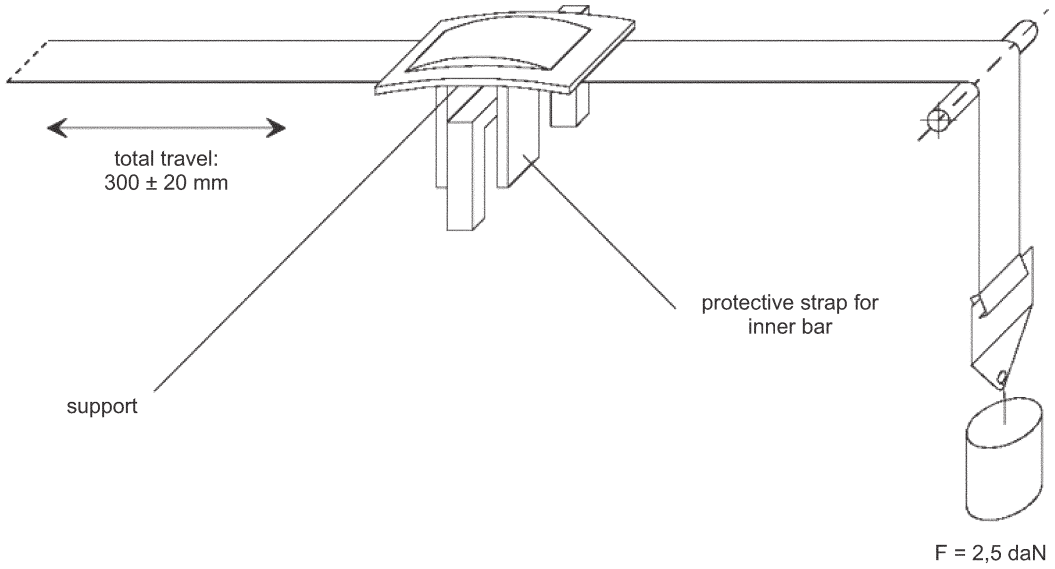

Example b

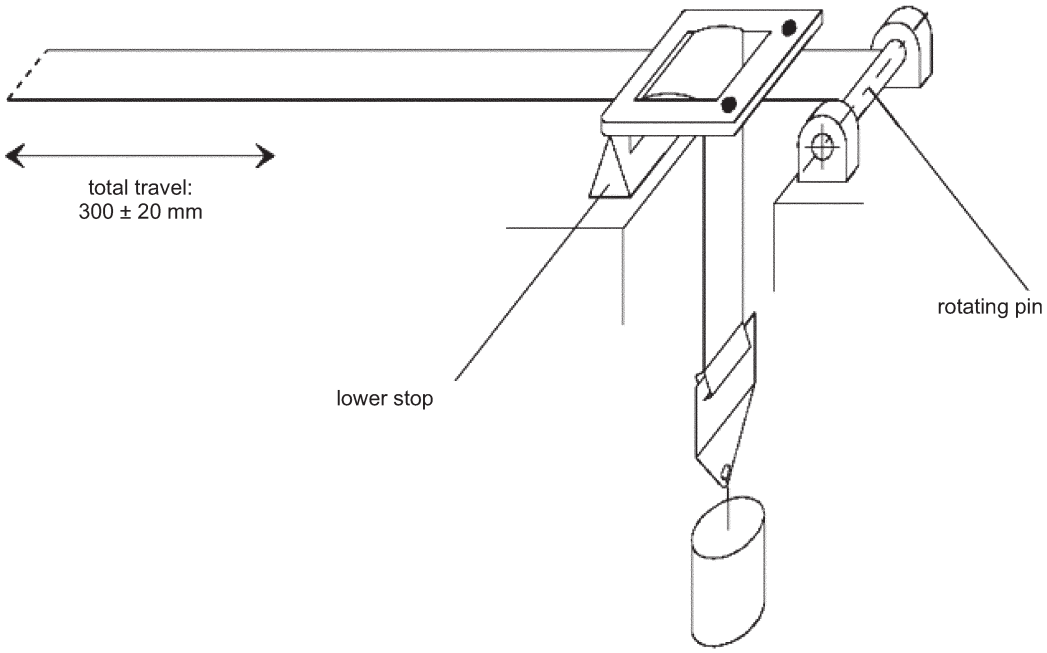

Figure 2:

Type 2 procedure

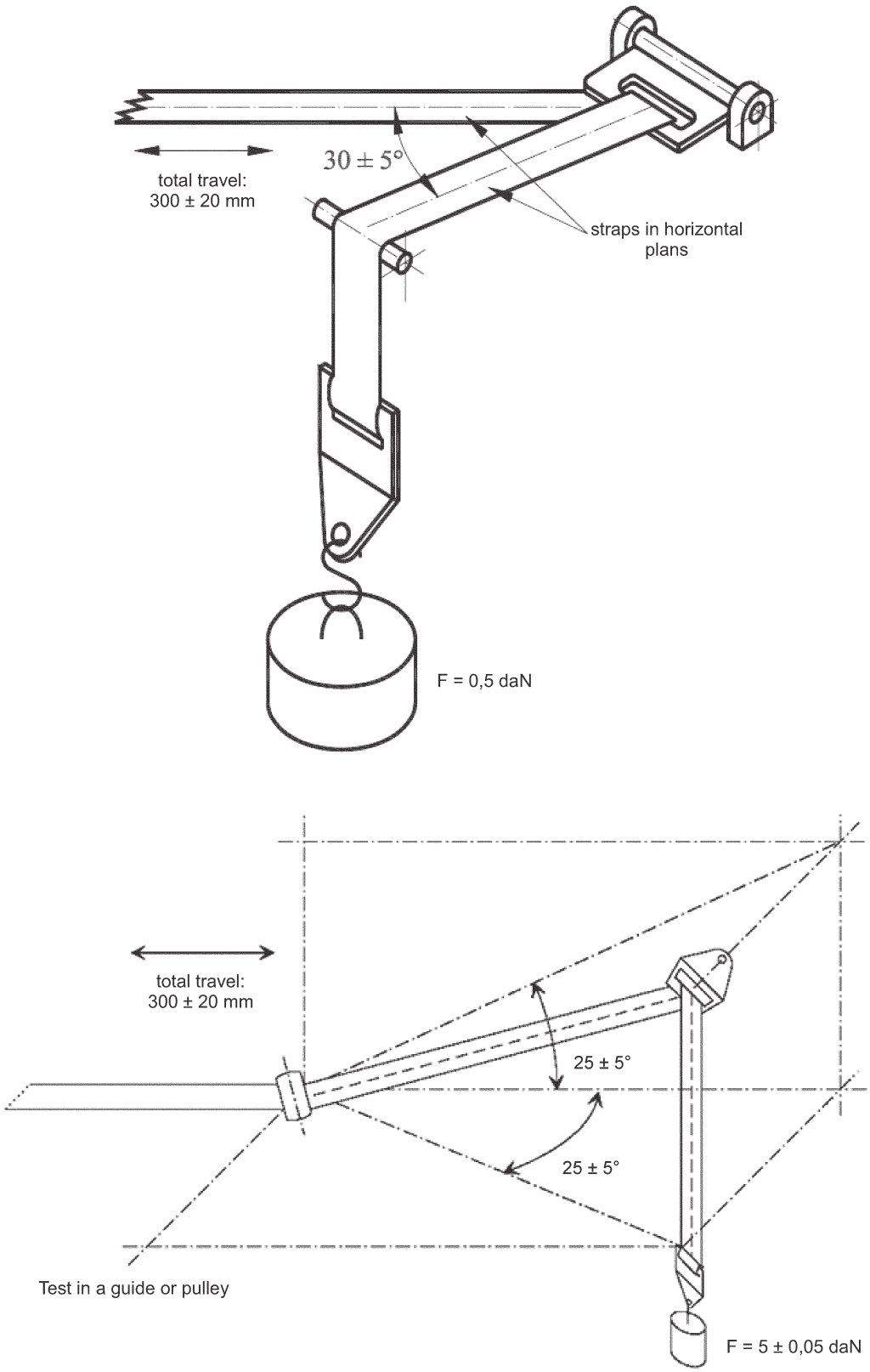

Figure 3:

Type 3 procedure and micro-slip test

Total travel: 300 ± 20 mm

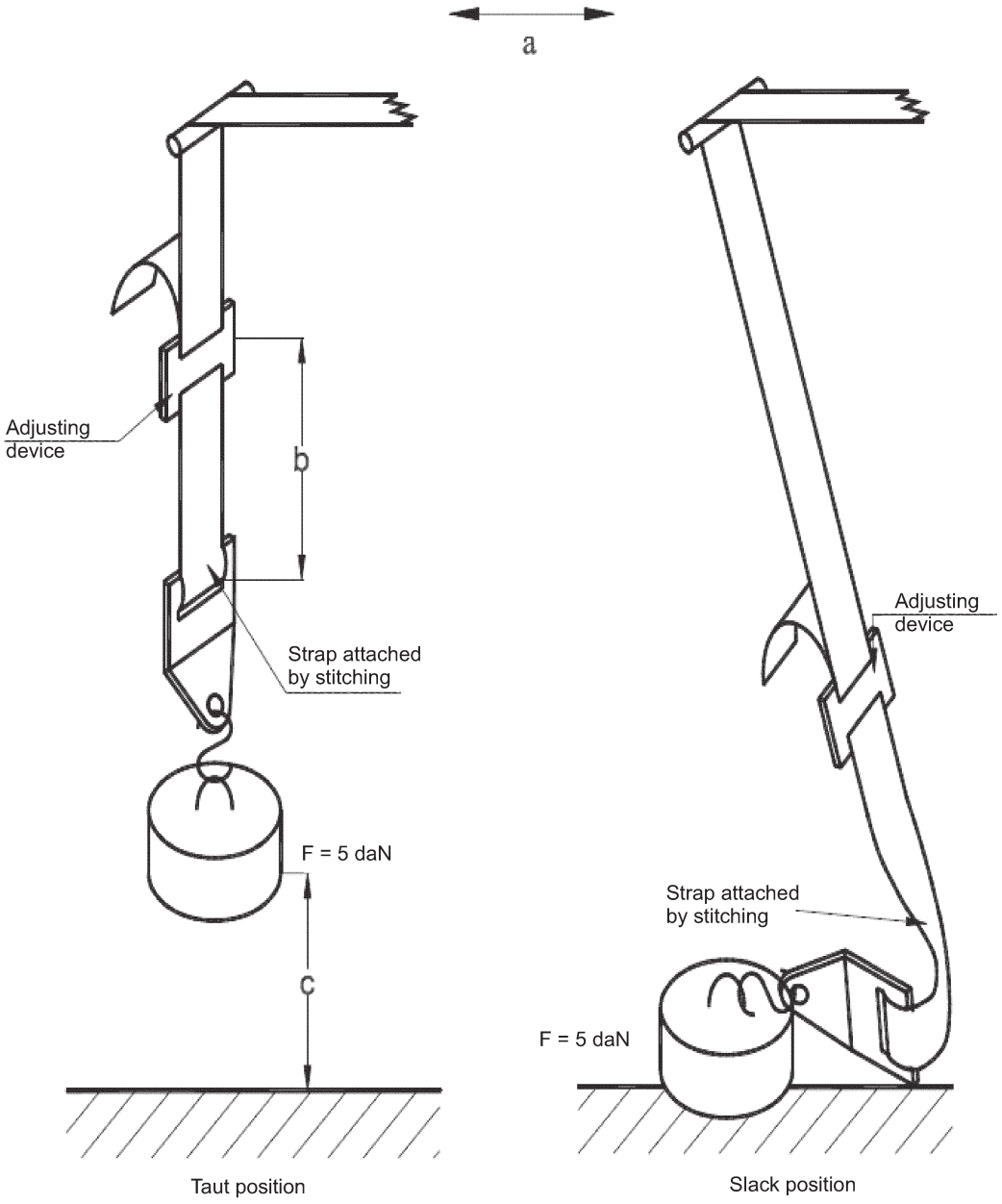

The load of 5 daN on the testing device shall be vertically guided in such a way as to avoid load-swing and twisting of the strap.

The attaching device shall be fixed to the load of 5 daN in the same manner as in a vehicle.

ANNEX 12

CORROSION TEST

1. TEST APPARATUS

1.1. The apparatus shall consist of a mist chamber, a salt solution reservoir, a supply of suitably conditioned compressed air, one or more atomizing nozzles, sample supports, provision for heating the chamber, and necessary means of control. The size and detail construction of the apparatus shall be optional, provided that the test conditions are met.

1.2. It is important to ensure that drops of solution accumulated on the ceiling or cover of the chamber do not fall on test samples.

1.3. Drops of solution which fall from test samples shall not return to the reservoir for respraying.

1.4. The apparatus shall not be constructed of materials that will affect the corrosiveness of the mist.

2. LOCATION OF TEST SAMPLES IN THE MIST CABINET

2.1. Samples, except retractors, shall be supported or suspended between 15° and 30° from the vertical and preferably parallel to the principal direction of horizontal flow of mist through the chamber, based upon the dominant surface being tested.

2.2. Retractors shall be supported or suspended so that the axes of the reel for storing the strap shall be normal to the principal direction of horizontal flow of mist through the chamber. The strap opening in the retractor shall also be facing in this principal direction.

2.3. Each sample shall be placed so as to permit free setting of mist on all samples.

2.4. Each sample shall be so placed as to prevent salt solution from one sample dripping on to any other sample.

3. SALT SOLUTION

3.1. The salt solution shall be prepared by dissolving 5 + 1 parts by mass of sodium chloride in 95 parts of distilled water. The salt shall be sodium chloride substantially free of nickel and copper and containing on the dry basis not more than 0,1 per cent of sodium iodide and not more than 0,3 per cent of total impurities.

3.2. The solution shall be such that when atomized at 35 °C the collected solution is in the pH range of 6,5 to 7,2.

4. AIR SUPPLY

The compressed air supply to the nozzle or nozzles for atomizing the salt solution shall be free of oil and dirt, and maintained at a pressure between 70 kN/m^2 and 170 kN/m^2.

5. CONDITIONS IN THE MIST CHAMBER

5.1. The exposure zone of the mist chamber shall be maintained at 35 ± 5° C. At least two clean mist collectors shall be placed within the exposure zone so that no drops of solution from the test samples or any other sources are collected. The collectors shall be placed near the test samples, one nearest to any nozzle and one furthest from all nozzles. The mist shall be such that for each 80 cm^2 of horizontal collecting areas, there is collected in each collector from 1,0 to 2,0 ml of solution per hour when measured over an average of at least 16 hours.

5.2. The nozzle or nozzles shall be directed or baffled so that the spray does not impinge directly on test samples.

ANNEX 13

ORDER OF TESTS

PARAGRAPHS	TEST	SAMPLES															
		Belt or restraint system No					Strap No										
		1	2	3	4	5	1	2	3	4	5	6	7	8	9	10	11
4/6.1.2./6.1.3/ 6.2.1.1./6.2.2./ 6.2.3.1./6.3.1.1.	Inspection of belt or restraint system	X															
2.21./2.22./ 6.2.2.2.	Inspection of buckle	X	X	X	X	X											
6.2.2.6./6.2.2.7./ 7.5.1./7.5.5.	Buckle strength test			X													
6.2.3.3./7.5.1.	Strength test on adjusting device (and where necessary retractors)			X													
6.2.4./7.5.2.	Strength test on attachments (and where necessary on retractors)			X													
6.2.2.3./7.5.3.	Low-temperature test on buckle	X	X														
6.2.1.4./7.5.4.	Low-temperature impact test on rigid parts	X	X														
6.2.3.2./6.2.3.4./ 7.5.6.	Ease of adjustment				X												
	Conditioning/ testing of belt or restraint system before dynamic test:																
6.2.2.4.	Durability of buckle	X	X														
6.2.1.2/7.2.	Corrosion resistance of rigid parts	X	X														
	Conditioning of retractors:																
6.2.5.2.1./ 6.2.5.3.1./ 6.2.5.3.3./7.6.2.	Locking threshold	X	X														
6.2.5.2.2./ 6.2.5.3.2./ 7.6.4	Retracting force	X	X														
6.2.5.2.3./ 6.2.5.3.3./ 7.6.1.	Durability	X	X														
6.2.5.2.3./ 6.2.5.3.3./ 7.2.	Corrosion	X	X														
6.2.5.2.3./ 6.2.5.3.3./ 7.6.3.	Dust	X	X														

PARAGRAPHS	TEST	SAMPLES															
		Belt or restraint system No					Strap No										
		1	2	3	4	5	1	2	3	4	5	6	7	8	9	10	11
6.3.1.2./7.4.2.3.	Testing of strap width						X	X									
	Strap strength test after:																
6.3.2./7.4.1.1./ 7.4.2.	Room conditioning						X	X									
6.3.3./7.4.1.2./ 7.4.2.	Light conditioning								X	X							
6.3.3./7.4.1.3./ 7.4.2.	Low -temperature conditioning										X	X					
6.3.3./7.4.1.4./ 7.4.2.	Heat conditioning												X	X			
6.3.3./7.4.1.5./ 7.4.2.	Water conditioning														X	X	
6.2.3.2/7.3.	Microslip test				X	X											
6.4.2./7.4.1.6.	Abrasion test				X	X											
6.4.1./7.7.	Dynamic test	X	X														
6.2.2.5./6.2.2.7./ 7.8.	Buckle-opening test	X	X														
7.1.4.	Retention of strap sample																X

ANNEX 14

CONTROL OF CONFORMITY OF PRODUCTION

1. TESTS

Safety-belts shall be required to demonstrate compliance with the requirements on which the following tests are based:

1.1. **Verification of the locking threshold and durability of emergency locking retractors**

According to the provisions of paragraph 7.6.2 in the most unfavourable direction as appropriate after having undergone the durability testing detailed in paragraphs 7.6.1, 7.2, and 7.6.3 as a requirement of paragraph 6.2.5.3.5 of this Regulation.

1.2. **Verification of the durability of automatically-locking retractors**

According to the provisions of paragraph 7.6.1 supplemented by the tests in paragraphs 7.2 and 7.6.3 as a requirement of paragraph 6.2.5.2.3 of this Regulation.

1.3. **Test for strength of straps after conditioning**

According to the procedure described in paragraph 7.4.2 after conditioning according to the requirements of paragraph 7.4.1.1 to 7.4.1.5 of this Regulation.

1.3.1. *Test for strength of straps after abrasion*

According to the procedure described in paragraph 7.4.2 after conditioning according to the requirements described in paragraph 7.4.1.6 of this Regulation.

1.4. **Microslip test**

According to the procedure described in paragraph 7.3 of this Regulation.

1.5. **Test of the rigid parts**

According to the procedure described in paragraph 7.5 of this Regulation.

1.6. **Verification of the performance requirements of the safety-belt or restraint system when subjected to the dynamic test**

1.6.1. *Tests with conditioning*

1.6.1.1. Belts or restraint systems fitted with an emergency locking retractor according to the provisions set out in paragraphs 7.7 and 7.8 of this Regulation, using a belt which has previously been subjected to 45 000 cycles of the endurance test of the retractor prescribed in paragraph 7.6.1 of this Regulation and to the tests defined in paragraphs 6.2.2.4, 7.2 and 7.6.3 of this Regulation.

1.6.1.2. Belts or restraint systems fitted with an automatically-locking retractor: according to the provisions set out in paragraphs 7.7 and 7.8 of this Regulation, using a belt which has previously been subjected to 10 000 cycles of the endurance test of the retractor prescribed in paragraph 7.6.1 and also to the tests prescribed in paragraphs 6.2.2.4, 7.2 and 7.6.3 of this Regulation.

1.6.1.3. Static belts: according to the provisions set out in paragraphs 7.7. and 7.8. of this Regulation, on a safety-belt which has been subjected to the test prescribed in paragraphs 6.2.2.4 and 7.2 of this Regulation.

1.6.2. *Test without any conditioning*

According to the provisions set out in paragraphs 7.7 and 7.8 of this Regulation.

2. TEST FREQUENCY AND RESULTS

2.1. The frequency of testing to the requirements of paragraphs 1.1 to 1.5 of this annex shall be on a statistically controlled and random basis in accordance with one of the regular quality assurance procedures.

2.1.1. Furthermore, in the case of emergency locking retractors, all assemblies shall be checked:

2.1.1.1. Either according to the provisions set out in paragraphs 7.6.2.1 and 7.6.2.2 of this Regulation, in the most unfavourable direction as specified in paragraph 7.6.2.1.2. Test results shall meet the requirements of paragraphs 6.2.5.3.1.1 and 6.2.5.3.3 of this Regulation.

2.1.1.2. Or according to the provisions set out in paragraph 7.6.2.3 of this Regulation, in the most unfavourable direction. Nevertheless, the speed of inclination can be more than the prescribed speed insofar as it does not affect the test results. Test results shall meet the requirements of paragraph 6.2.5.3.1.4 of this Regulation.

2.2. In the case of compliance with the dynamic test according to paragraph 1.6 of this annex, this shall be carried out with a minimum frequency of:

2.2.1. *Tests with conditioning*

2.2.1.1. In the case of belts fitted with an emergency locking retractor,

— where the daily production is greater than 1 000 belts: one in 100 000 belts produced, with a minimum frequency of one every two weeks,

— where the daily production is smaller than or equal to 1 000 belts: one in 10 000 belts produced, with a minimum frequency of one per year, per sort of locking mechanism ([1]),

shall be subjected to the test prescribed in paragraph 1.6.1.1 of this annex.

2.2.1.2. In the case of belts fitted with an automatically-locking retractor and of static belts,

— where the daily production is greater than 1 000 belts: one in 100 000 belts produced, with a minimum frequency of one every two weeks,

— where the daily production is smaller than or equal to 1 000 belts: one in 10 000 belts produced, with a minimum frequency of one per year,

shall be subjected to the test prescribed in paragraphs 1.6.1.2 or 1.6.1.3 of this annex respectively.

2.2.2. *Tests without conditioning*

2.2.2.1. In the case of belts fitted with an emergency locking retractor, the following number of samples shall be subject to the test prescribed in paragraph 1.6.2 above:

2.2.2.1.1. for a production of not less than 5 000 belts per day, two belts per 25 000 produced with a minimum frequency of one per day, per sort of locking mechanism;

2.2.2.1.2. for a production of less than 5 000 belts per day, one belt per 5 000 produced with a minimum frequency of one per year, per sort of locking mechanism;

2.2.2.2. In the case of belts fitted with an automatically-locking retractor and of static belts, the following number of samples shall be subjected to the test prescribed in paragraph 1.6.2. above;

2.2.2.2.1. for a production of not less than 5 000 belts per day, two belts per 25 000 produced with a minimum of one per day, per approved type;

2.2.2.2.2. for a production of less than 5 000 belts per day, one belt per 5 000 produced with a minimum frequency of one per year, per approved type;

([1]) For the purposes of this annex, 'sort of locking mechanism' means all emergency locking retractors whose mechanisms differ only in the lead angle(s) of the sensing device to the vehicle's reference axis system.

2.2.3. *Results*

Test results shall meet the requirements set out in paragraph 6.4.1.3.1 of this Regulation.

The forward displacement of the manikin may be controlled with regard to paragraph 6.4.1.3.2 of this Regulation (or 6.4.1.4 where applicable) during a test performed with conditioning according to paragraph 1.6.1 of this annex by means of a simplified adapted method.

2.2.3.1. In the case of approval following paragraph 6.4.1.3.3 of this Regulation and paragraph 1.6.1 of this annex, it is only specified that no part of the belt shall be destructed or disengaged, and that a speed of 24 km/h of the chest reference point at 300 mm displacement shall not be exceeded.

2.3. Where a test sample fails a particular test to which it has been subjected, a further test to the same requirements shall be carried out on at least three other samples. In the case of dynamic tests, if one of the latter fails the test, the holder of the approval or his duly accredited representative shall notify the competent authority which has granted type approval indicating what steps have been taken to re-establish the conformity of production.

ANNEX 15

PROCEDURE FOR DETERMINING THE 'H' POINT AND THE ACTUAL TORSO ANGLE FOR SEATING POSITIONS IN MOTOR VEHICLES

1. PURPOSE

The procedure described in this annex is used to establish the 'H' point location and the actual torso angle for one or several seating positions in a motor vehicle and to verify the relationship of measured data to design specifications given by the vehicle manufacturer ([1]).

2. DEFINITIONS

For the purposes of this annex:

2.1. 'Reference data' means one or several of the following characteristics of a seating position:

2.1.1. the 'H' point and the 'R' point and their relationship,

2.1.2. the actual torso angle and the design torso angle and their relationship.

2.2. 'Three-dimensional "H" point machine' (3-D H machine) means the device used for the determination of 'H' points and actual torso angles. This device is described in Appendix 1 to this annex;

2.3. '"H" point' means the pivot centre of the torso and the thigh of the 3-D H machine installed in the vehicle seat in accordance with paragraph 4 below. The 'H' point is located in the centre of the centreline of the device which is between the 'H' point sight buttons on either side of the 3-D H machine. The 'H' point corresponds theoretically to the 'R' point (for tolerances see paragraph 3.2.2 below). Once determined in accordance with the procedure described in paragraph 4, the 'H' point is considered fixed in relation to the seat-cushion structure and to move with it when the seat is adjusted;

2.4. '"R" point' or 'seating reference point' means a design point defined by the vehicle manufacturer for each seating position and established with respect to the three-dimensional reference system;

2.5. 'Torso-line' means the centreline of the probe of the 3-D H machine with the probe in the fully rearward position;

2.6. 'Actual torso angle' means the angle measured between a vertical line through the 'H' point and the torso line using the back angle quadrant on the 3-D H machine. The actual torso angle corresponds theoretically to the design torso angle (for tolerances see paragraph 3.2.2. below):

2.7. 'Design torso angle' means the angle measures between a vertical line through the 'R' point and the torso line in a position which corresponds to the design position of the seat-back established by the vehicle manufacturer;

2.8. 'Centreplane of occupant' (C/LO) means the median plane of the 3-D H machine positioned in each designated seating position; it is represented by the co-ordinate of the 'H' point on the 'Y' axis. For individual seats, the centreplane of the seat coincides with the centreplane of the occupant. For other seats, the centreplane of the occupant is specified by the manufacturer;

2.9. 'Three-dimensional reference system' means a system as described in Appendix 2 to this annex;

2.10. 'Fiducial marks' are physical points (holes, surfaces, marks or indentations) on the vehicle body as defined by the manufacturer;

2.11. 'Vehicle measuring attitude' means the position of the vehicle as defined by the co-ordinates of fiducial marks in the three-dimensional reference system.

([1]) In any seating position other than front seats where the 'H' point cannot be determined using the 'Three-dimensional "H" point machine' or procedures, the 'R' point indicated by the manufacturer may be taken as a reference at the discretion of the competent authority.

3. REQUIREMENTS

3.1. **Data presentation**

For each seating position where reference data are required in order to demonstrate compliance with the provisions of the present Regulation, all or an appropriate selection of the following data shall be presented in the form indicated in Appendix 3 to this annex:

3.1.1. the co-ordinates of the 'R' point relative to the three-dimensional reference system;

3.1.2. the design torso angle;

3.1.3. all indications necessary to adjust the seat (if it is adjustable) to the measuring position set out in paragraph 4.3 below.

3.2. **Relationship between measured data and design specifications**

3.2.1. The co-ordinates of the 'H' point and the value of the actual torso angle obtained by the procedure set out in paragraph 4 below shall be compared, respectively, with the co-ordinates of the 'R' point and the value of the design torso angle indicated by the vehicle manufacturer.

3.2.2. The relative positions of the 'R' point and the 'H' point and the relationship between the design torso angle and the actual torso angle shall be considered satisfactory for the seating position in question if the 'H' point, as defined by its co-ordinates, lies within a square of 50 mm side length with horizontal and vertical sides whose diagonals intersect at the 'R' point, and if the actual torso angle is within 5° of the design torso angle.

3.2.3. If these conditions are met, the 'R' point and the design torso angle, shall be used to demonstrate compliance with the provisions of this Regulation.

3.2.4. If the 'H' point or the actual torso angle does not satisfy the requirements of paragraph 3.2.2 above, the 'H' point and the actual torso angle shall be determined twice more (three times in all). If the results of two of these three operations satisfy the requirements, the conditions of paragraph 3.2.3 above shall apply.

3.2.5. If the results of at least two of the three operations described in paragraph 3.2.4 above do not satisfy the requirements of paragraph 3.2.2 above, or if the verification cannot take place because the vehicle manufacturer has failed to supply information regarding the position of the 'R' point or regarding the design torso angle, the centroid of the three measured points or the average of the three measured angles shall be used and be regarded as applicable in all cases where the 'R' point or the design torso angle is referred to in this Regulation.

4. PROCEDURE FOR 'H' POINT AND ACTUAL TORSO ANGLE DETERMINATION

4.1. The vehicle shall be preconditioned at the manufacturer's discretion, at a temperature of 20 ± 10 °C to ensure that the seat material reached room temperature. If the seat to be checked has never been sat upon, a 70 to 80 kg person or device shall sit on the seat twice for one minute to flex the cushion and back. At the manufacturer's request, all seat assemblies shall remain unloaded for a minimum period of 30 minutes prior to installation of the 3-D H machine.

4.2. The vehicle shall be at the measuring attitude defined in paragraph 2.11 above.

4.3. The seat, if it is adjustable, shall be adjusted first to the rearmost normal driving or riding position, as indicated by the vehicle manufacturer, taking into consideration only the longitudinal adjustment of the seat, excluding seat travel used for purposes other than normal driving or riding positions. Where other modes of seat adjustment exist (vertical, angular, seat-back, etc.) these will then be adjusted to the position specified by the vehicle manufacturer. For suspension seats, the vertical position shall be rigidly fixed corresponding to a normal driving position as specified by the manufacturer.

4.4. The area of the seating position contacted by the 3-D H machine shall be covered by a muslin cotton, of sufficient size and appropriate texture, described as a plain cotton fabric having 18,9 threads per cm^2 and weighing 0,228 kg/m^2 or knitted or non-woven fabric having equivalent characteristics. If the test is run on a seat outside the vehicle, the floor on which the seat is placed shall have the same essential characteristics ([2]) as the floor of the vehicle in which the seat is intended to be used.

([2]) Tilt angle, height difference with a seat mounting, surface.

4.5. Place the seat and back assembly of the 3-D H machine so that the centreplane of the occupant (C/LO) coincides with the centreplane of the 3-D H machine. At the manufacturer's request, the 3-D H machine may be moved inboard with respect to the C/LO if the 3-D H machine is located so far outboard that the seat edge will not permit levelling of the 3-D H machine.

4.6. Attach the foot and lower leg assemblies to the seat pan assembly, either individually or by using the T-bar and lower leg assembly. A line through the 'H' point sight buttons shall be parallel to the ground and perpendicular to the longitudinal centreplane of the seat.

4.7. Adjust the feet and leg positions of the 3-D H machine as follows:

4.7.1. *Designated seating position: driver and outside front passenger*

4.7.1.1. Both feet and leg assemblies shall be moved forward in such a way that the feet take up natural positions on the floor, between the operating pedals if necessary. Where possible the left foot shall be located approximately the same distance to the left of the centreplane of the 3-D H machine as the right foot is to the right. The spirit level verifying the transverse orientation of the 3-D H machine is brought to the horizontal by readjustment of the seat pan if necessary, or by adjusting the leg and foot assemblies towards the rear. The line passing through the 'H' point sight buttons shall be maintained perpendicular to the longitudinal centreplane of the seat.

4.7.1.2. If the left leg cannot be kept parallel to the right leg and the left foot cannot be supported by the structure, move the left foot until it is supported. The alignment of the sight buttons shall be maintained.

4.7.2. *Designated seating position: outboard rear*

For rear seats or auxiliary seats, the legs are located as specified by the manufacturer. If the feet then rest on parts of the floor which are at different levels, the foot which first comes into contact with the front seat shall serve as a reference and the other foot shall be so arranged that the spirit level giving the transverse orientation of the seat of the device indicates the horizontal.

4.7.3. *Other designated seating positions:*

The general procedure indicated in paragraph 4.7.1 above shall be followed except that the feet shall be placed as specified by the vehicle manufacturer.

4.8. Apply lower leg and thigh weights and level the 3-D H machine.

4.9. Tilt the back pan forward against the forward stop and draw the 3-D H machine away from the seat-back using the T-bar. Reposition the 3-D H machine on the seat by one of the following methods:

4.9.1. If the 3-D H machine tends to slide rearward, use the following procedure. Allow the 3-D H machine to slide rearward until a forward horizontal restraining load on the T-bar is no longer required i.e. until the seat pan contacts the seat-back. If necessary, reposition the lower leg.

4.9.2. If the 3-D H machine does not tend to slide rearward, use the following procedure. Slide the 3-D H machine rearwards by applying a horizontal rearward load to the T-bar until the seat pan contacts the seat-back (see figure 2 of Appendix 1 to this annex).

4.10. Apply a 100 ± 10 N load to the back and pan assembly of the 3-D H machine at the intersection of the hip angle quadrant and the T-bar housing. The direction of load application shall be maintained along a line passing by the above intersection to a point just above the thigh bar housing (see figure 2 of Appendix 1 to this annex). Then carefully return the back pan to the seat-back. Care must be exercised throughout the remainder of the procedure to prevent the 3-D H machine from sliding forward.

4.11. Install the right and left buttock weights and then, alternately, the eight torso weights. Maintain the 3-D H machine level.

4.12. Tilt the back pan forward to release the tension on the seat-back. Rock the 3-D H machine from side to side through a 10° arc (5° to each side of the vertical centreplane) for three complete cycles to release any accumulated friction between the 3-D H machine and the seat.

During the rocking action, the T-bar of the 3-D H machine may tend to diverge from the specified horizontal and vertical alignment. The T-bar must therefore be restrained by applying an appropriate lateral load during the rocking motions. Care shall be exercised in holding the T-bar and rocking the 3-D H machine to ensure that no inadvertent exterior loads are applied in a vertical or fore and aft direction.

The feet of the 3-D H machine are not to be restrained or held during this step. If the feet change position, they should be allowed to remain in that attitude for the moment.

Carefully return the back pan to the seat-back and check the two spirit levels for zero position. If any movement of the feet has occurred during the rocking operation of the 3-D H machine, they must be repositioned as follows:

Alternately, lift each foot off the floor the minimum necessary amount until no additional foot movement is obtained. During this lifting, the feet are to be free to rotate; and no forward or lateral loads are to be applied. When each foot is placed back in the down position, the heel is to be in contact with the structure designed for this.

Check the lateral spirit level for zero position; if necessary, apply a lateral load to the top of the back pan sufficient to level the 3-D H machine's seat pan on the seat.

4.13. Holding the T-bar to prevent the 3-D H machine from sliding forward on the seat cushion, proceed as follows:

(a) return the back pan to the seat-back;

(b) alternately apply and release a horizontal rearward load, not to exceed 25 N, to the back angle bar at a height approximately at the centre of the torso weights until the hip angle quadrant indicates that a stable position has been reached after load release. Care shall be exercised to ensure that no exterior downward or lateral loads are applied to the 3-D H machine. If another level adjustment of the 3-D H machine is necessary, rotate the back pan forward, re-level, and repeat the procedure from paragraph 4.12.

4.14. Take all measurements:

4.14.1. The co-ordinates of the 'H' point are measured with respect to the three-dimensional reference system.

4.14.2. The actual torso angle is read at the back angle quadrant of the 3-D H machine with the probe in its fully rearward position.

4.15. If a re-run of the installation of the 3-D H machine is desired the seat assembly should remain unloaded for a minimum period of 30 minutes prior to the re-run. The 3-D H machine should not be left loaded on the seat assembly longer than the time required to perform the test.

4.16. If the seats in the same row can be regarded as similar (bench seat, identical seats, etc.) only one 'H' point and one 'actual torso angle' shall be determined for each row of seats, the 3-D H machine described in Appendix 1 to this annex being seated in a place regarded as representative for the row. This place shall be:

4.16.1. in the case of the front row, the driver's seat;

4.16.2. in the case of the rear row or rows, an outer seat.

Appendix 1

DESCRIPTION OF THE THREE DIMENSIONAL 'H' POINT MACHINE (*)

(3-D H machine)

1. BACK AND SEAT PANS

The back and seat pans are constructed of reinforced plastic and metal; they simulate the human torso and thigh and are mechanically hinged at the 'H' point. A quadrant is fastened to the probe hinged at the 'H' point to measure the actual torso angle. An adjustable thigh bar, attached to the seat pan, establishes the thigh centreline and serves as a baseline for the hip angle quadrant.

2. BODY AND LEG ELEMENTS

Lower leg segments are connected to the seat pan assembly at the T-bar joining the knees, which is a lateral extension of the adjustable thigh bar. Quadrants are incorporated in the lower leg segments to measure knee angles. Shoe and foot assemblies are calibrated to measure the foot angle. Two spirit levels orient the device in space. Body element weights are placed at the corresponding centres of gravity to provide seat penetration equivalent to a 76 kg male. All joints of the 3-D H machine should be checked for free movement without encountering noticeable friction.

Figure 1

3-D H machine elements designation

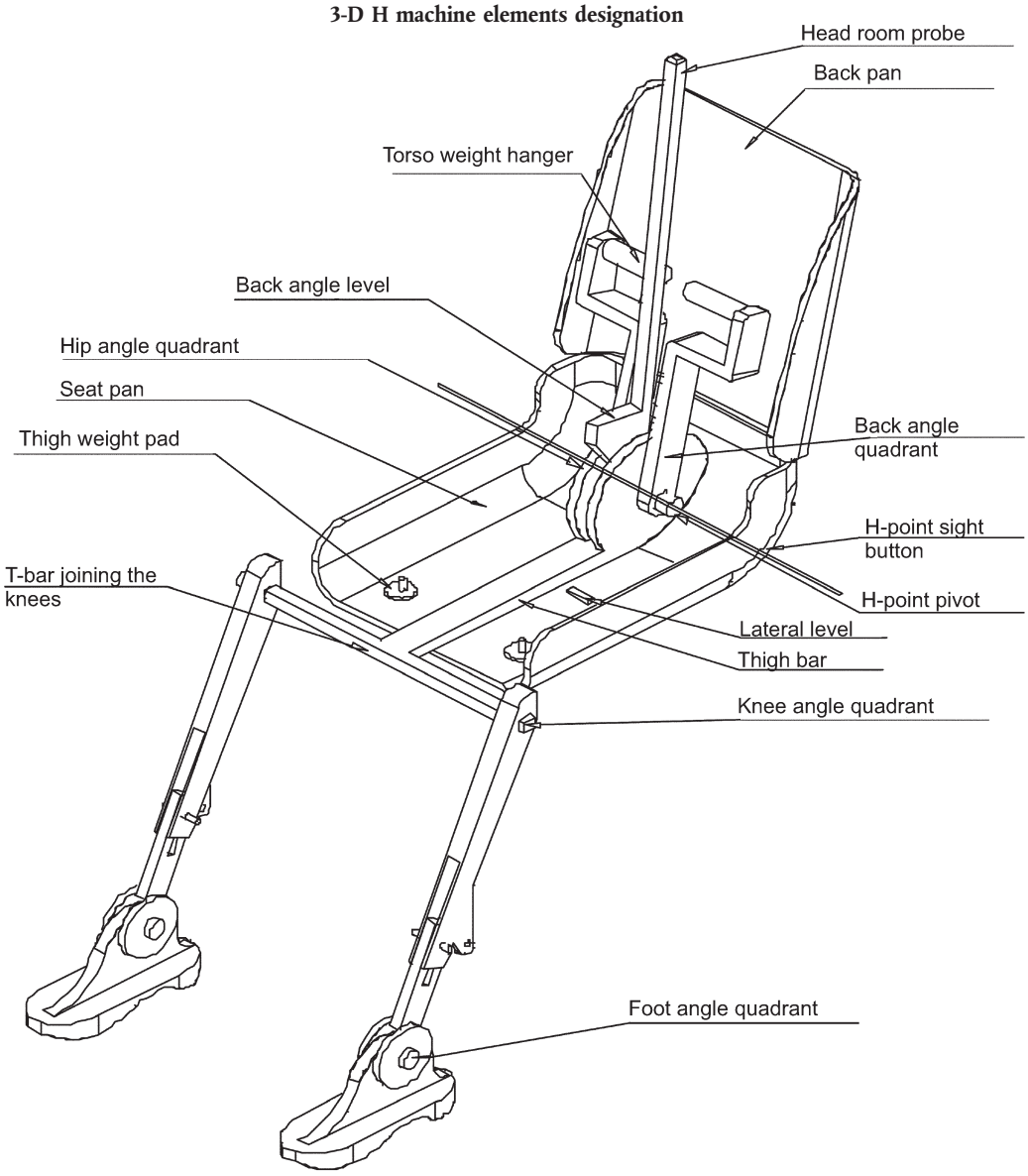

(*) For details of the construction of the 3-D H machine refer to Society of Automobile Engineers (SAE), 400 Commonwealth Drive, Warrendale, Pennsylvania 15096, United States of America.
The machine corresponds to that described in Standard ISO 6549:1980.

Figure 2

Dimensions of the 3-D machine elements and load distribution

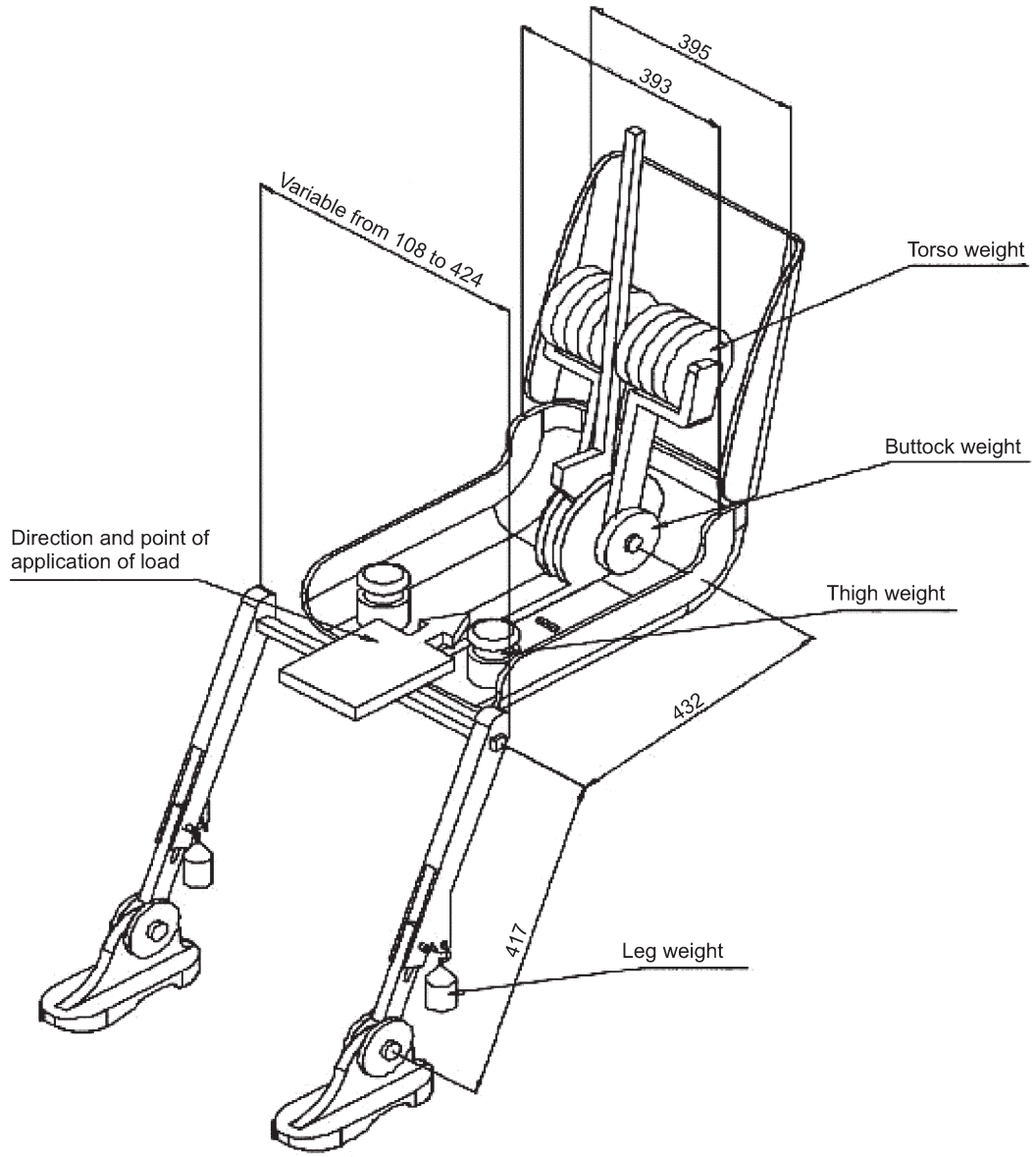

Appendix 2

THREE-DIMENSIONAL REFERENCE SYSTEM

1. The three-dimensional reference system is defined by three orthogonal planes established by the vehicle manufacturer (see figure) (*).

2. The vehicle measuring attitude is established by positioning the vehicle on the supporting surface such that the co-ordinates of the fiducial marks correspond to the values indicated by the manufacturer.

3. The co-ordinates of the 'R' point and the 'H' point are established in relation to the fiducial marks defined by the vehicle manufacturer.

Figure

Three dimensional reference system

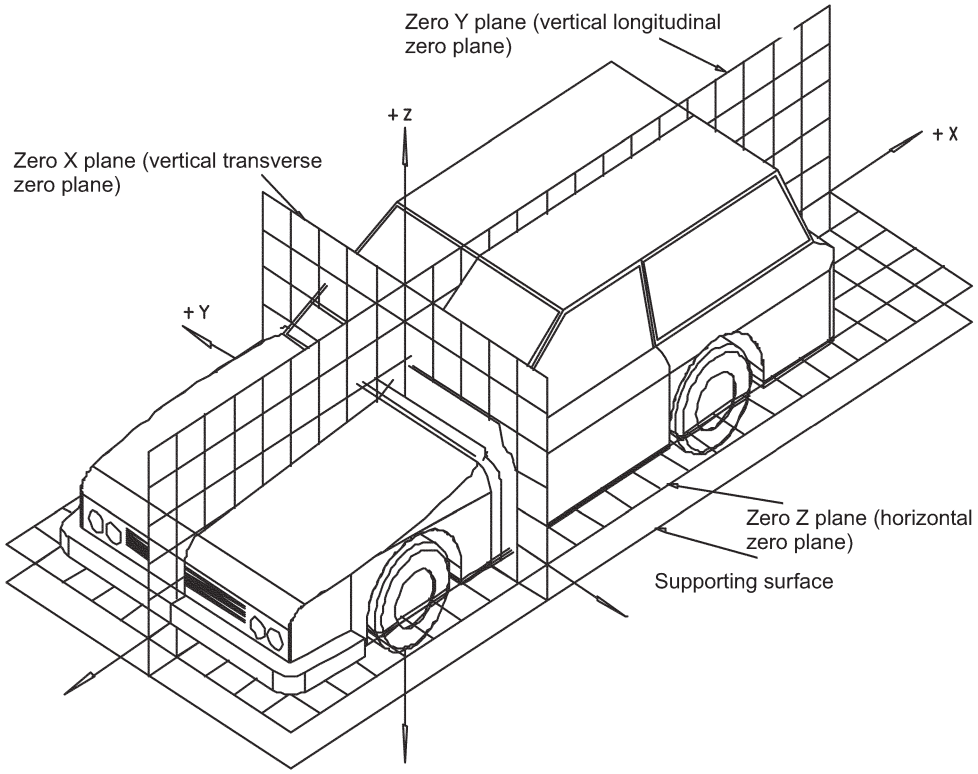

(*) The reference system corresponds to Standard ISO 4130:1978.

Appendix 3

REFERENCE DATA CONCERNING SEATING POSITIONS

1. CODING OF REFERENCE DATA

Reference data are listed consecutively for each seating position. Seating positions are identified by a two-digit code. The first digit is an Arabic numeral and designates the row of seats, counting from the front to the rear of the vehicle. The second digit is a capital letter which designates the location of the seating position in a row, as viewed in the direction of forward motion of the vehicle; the following letters shall be used:

L = left
C = centre
R = right

2. DESCRIPTION OF VEHICLE MEASURING ATTITUDE

2.1. Co-ordinates of fiducial marks

X .....

Y .....

Z .....

3. LIST OF REFERENCE DATA

3.1. Seating position: .....

3.1.1. Co-ordinates of 'R' point

X .....

Y .....

Z .....

3.1.2. Design torso angle: .....

3.1.3. Specifications for seat adjustment (*)

horizontal : .....

vertical : .....

angular : .....

torso angle: .....

Note: List reference data for further seating positions under paragraphs 3.2, 3.3, etc.

(*) Strike out what does not apply.

ANNEX 16

MINIMUM REQUIREMENTS FOR SAFETY-BELTS AND RETRACTORS

Vehicle Category	Forward facing seating positions				Rear facing Seating positions
	Outboard seating positions		Centre seating position		
	Front	Other than front	Front	Other than front	
M1	Ar4m	Ar4m	Ar4m	Ar4m	B, Br3, Br4m
M2 ≤ 3,5 t	Ar4m, Ar4Nm	Ar4m, Ar4Nm	Ar4m, Ar4Nm	Ar4m, Ar4Nm	Br3, Br4m, Br4Nm
M2 > 3,5 t M3	Br3, Br4m, Br4Nm, or Ar4m or Ar4Nm •	Br3, Br4m, Br4Nm, or Ar4m or Ar4Nm •	Br3, Br4m, Br4Nm or Ar4m or Ar4Nm •	Br3, Br4m, Br4Nm or Ar4m or Ar4Nm •	Br3, Br4m, Br4Nm
	See para. 8.1.7 for conditions when a lap belt is permitted	See para. 8.1.7 for conditions when a lap belt is permitted	See para. 8.1.7 for conditions when a lap belt is permitted	See para. 8.1.7 for conditions when a lap belt is permitted	
N1	Ar4m, Ar4Nm	Ar4m, Ar4Nm, Br4m, Br4Nm Ø	B, Br3, Br4m, Br4Nm or A, Ar4m, Ar4Nm * ([1])	B, Br3, Br4m, Br4Nm	B, Br3, Br4m, Br4Nm
		Para. 8.1.2.1 lap belt permitted if seat is inboard of a passageway	Para. 8.1.6 lap belt permitted if the windscreen is not in the reference zone.		
N2 N3	B, Br3, Br4m, Br4Nm or A, Ar4m, Ar4Nm *	B, Br3, Br4m, Br4Nm	B, Br3, Br4m, Br4Nm, or A, Ar4m, Ar4Nm *	B, Br3, Br4m, Br4Nm	B, Br3, Br4m, Br4Nm
	Para. 8.1.6 lap belt permitted if the windscreen is outside the reference zone and for the driver's seat.		Para. 8.1.6 lap belt permitted if the windscreen is not in the reference zone.		

A: three-point (lap and diagonal) belt
B: 2-point (lap) belt
r: retractor
m: emergency locking retractor with multiple sensitivity (see Regulation No 16, paras. 2.14.3 and 2.14.5)
3: automatically locking retractor
4: emergency locking retractor
N: higher response threshold
*: Refers to para. 8.1.6 of this Regulation ([2])
Ø: Refers to para. 8.1.2.1 of this Regulation
•: refers to para. 8.1.7 of this Regulation ([2])

([1]) Erratum to Supplement 12 to the 04 series of amendments, applicable 'ab initio.'
([2]) Erratum to Revision 4, applicable 'ab initio.'

Note: In all cases all S-type belts may be fitted in place of all possible A or B type belts, provided their anchorages comply with Regulation No 14.

Where a harness belt has been approved as a S-type belt according to this Regulation, using the lap belt strap, the shoulder belt straps and possibly one or more retractors, one or two additional crotch straps including their attachments for their anchorages may be provided by the manufacturer/applicant. These additional anchorages need not meet the requirements of Regulation No 14 (Erratum to Supplement 14 to the 04 series of amendments, applicable 'ab initio.'

ANNEX 17

REQUIREMENTS FOR THE INSTALLATION OF SAFETY-BELTS AND RESTRAINT SYSTEMS FOR ADULT OCCUPANTS OF POWER-DRIVEN VEHICLES ON FORWARD FACING SEATS AND FOR THE INSTALLATION OF ISOFIX CHILD RESTRAINT SYSTEMS

1. COMPATIBILITY WITH CHILD RESTRAINT SYSTEMS

1.1. The vehicle manufacturer shall include in the vehicle handbook advice on the suitability of each passenger seat position for the carriage of children up to 12 years old (or up to 1,5 m tall), or the fitting of child restraint systems. This information shall be given in the national language, or at least one of the national languages, of the country in which the vehicle is offered for sale.

For each forward-facing passenger seat position, and for each Isofix position, the vehicle manufacturer shall either:

(a) Indicate that the seat position is suitable for child restraints of the 'universal' category (see paragraph 1.2 below);

(b) Indicate if the Isofix position is suitable for Isofix child restraint systems of the 'universal' category (see paragraph 1.2 below);

(c) Provide a list of child restraint systems of the 'semi-universal', 'restricted' or 'vehicle-specific' categories, suitable for that vehicle seating position, indicating the mass group(s) for which the restraints are intended;

(d) Provide a list of Isofix child restraint systems of the 'semi-universal', 'restricted' or 'vehicle specific' categories, suitable for that vehicle Isofix position, indicating the mass group and the Isofix size class for which the Isofix child restraints are intended;

(e) Provide a built-in child restraint system, indicating the mass group(s) for which the restraint is intended and the corresponding configuration(s);

(f) Provide any combination of (a), (b), (c), (d), (e);

(g) Indicate the mass group(s) of the children which shall not be carried in that seat position.

If a seat position is only suitable for use with forward-facing child restraint systems, this shall be indicated.

Tables in a suitable format for the above information are given in Appendix 3 to this annex.

1.2. A child restraint system or Isofix child restraint system, of the universal category means a child restraint approved to the 'universal' category of Regulation No 44, Supplement 5 to 03 series of amendments. Seat positions, or Isofix positions, which are indicated by the vehicle manufacturer as being suitable for the installation of child restraints systems or Isofix child restraints systems shall comply with the provisions of Appendix 1 or 2 to this annex. Where applicable any restriction on the simultaneous use on adjacent positions of Isofix child restraint systems and/or between Isofix positions and adult seating positions shall be reported in the table 2 of Appendix 3 to this annex.

Appendix 1

PROVISIONS CONCERNING THE INSTALLATION OF 'UNIVERSAL' CATEGORY CHILD RESTRAINT SYSTEMS INSTALLED WITH THE SAFETY-BELT EQUIPMENT OF THE VEHICLE

1. GENERAL

1.1. The test procedure and the requirements in this appendix shall be used to determine the suitability of seat positions for the installation of child restraints of the 'universal' category.

1.2. The tests may be carried out in the vehicle or in a representative part of the vehicle.

2. TEST PROCEDURE

2.1. Adjust the seat to its fully rearward and lowest position.

2.2. Adjust the seat-back angle to the manufacturer's design position. In the absence of any specification, an angle of 25 degrees from the vertical, or the nearest fixed position of the seat-back, should be used.

2.3. Set the shoulder anchorage to the lowest position.

2.4. Place a cotton cloth on the seat-back and cushion.

2.5. Place the fixture (as described in figure 1 of this appendix) on the vehicle seat.

2.6. If the seating position is intended to accommodate a forward-facing or rearward-facing universal restraint system, proceed according to paragraphs 2.6.1, 2.7, 2.8, 2.9 and 2.10. If the seating position is intended to accommodate only a forward-facing universal restraint system, proceed according to paragraphs 2.6.2, 2.7, 2.8, 2.9 and 2.10.

2.6.1. Arrange the safety-belt strap around the fixture in approximately the correct position as shown in figures 2 and 3, then latch the buckle.

2.6.2. Arrange the safety-belt lap strap approximately in the correct position around the lower part of the fixture of 150 mm radius as shown in Figure 3, then latch the buckle.

2.7. Ensure that the fixture is located with its centreline on the apparent centreline of the seating position ± 25 mm with its centreline parallel with the centreline of the vehicle.

2.8. Ensure that all webbing slack is removed. Use sufficient force to remove the slack, do not attempt to tension the webbing.

2.9. Push rearwards on the centre of the front of the fixture with a force of 100 N ± 10 N, applied parallel to the lower surface, and remove the force.

2.10. Push vertically downwards on the centre of the upper surface of the fixture with a force of 100 N ± 10 N, and remove the force.

3. REQUIREMENTS

3.1. The base of the fixture shall contact both the forward and rearward parts of the seat cushion surface. If such contact does not occur due to the belt access gap in the test fixture, this gap may be covered in line with the bottom surface of the test fixture.

3.2. The lap portion of the belt shall touch the fixture on both sides at the rear of the lap belt path (see figure 3).

3.3. Should the above requirements not be met with the adjustments indicated in paragraphs 2.1, 2.2 and 2.3, the seat, seat-back and safety-belt anchorages may be adjusted to an alternative position designated by the manufacturer for normal use at which the above installation procedure shall be repeated and the requirements again verified and met. This alternative position shall be included as an information in the Table 1 given in Appendix 3 to this annex.

Figure 1

Specifications of the fixture

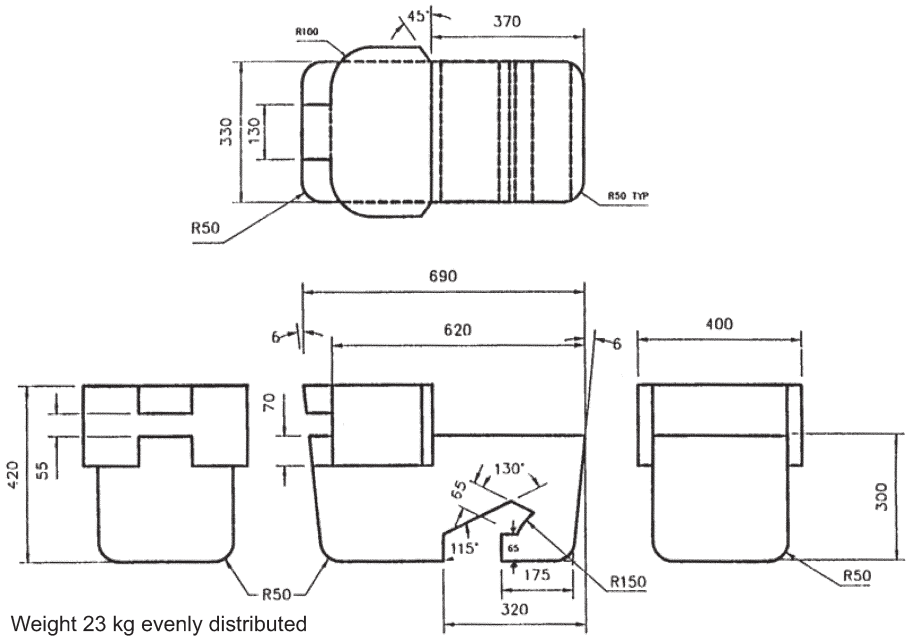

Figure 2

Installation of fixture onto vehicle seat (see paragraph 2.6.1.)

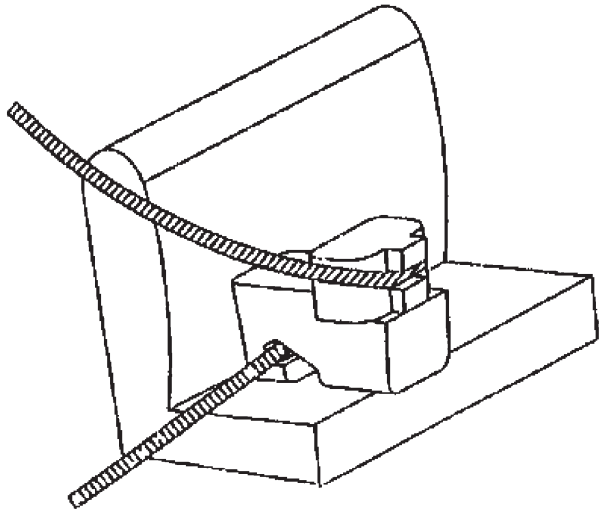

Figure 3

Check for compatibility (see paragraphs 2.6.1. and 3.2.)

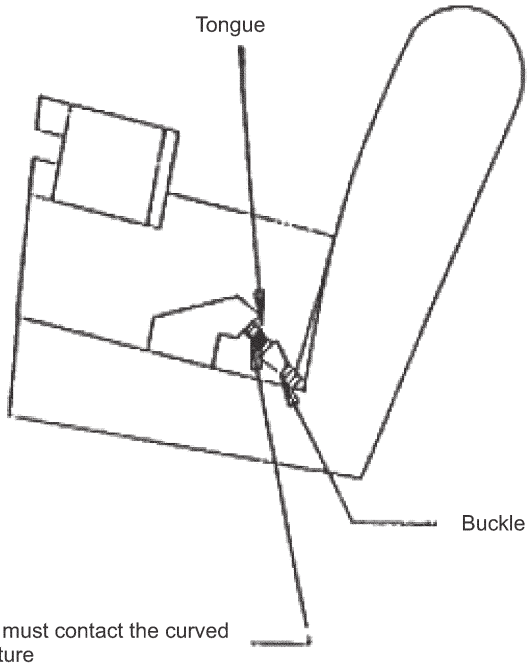

Note: The seat belt webbing must contact the curved edge on both sides of the fixture

Lap belt only shown

Appendix 2

PROVISIONS CONCERNING THE INSTALLATION OF FORWARD-FACING AND REARWARD-FACING ISOFIX CHILD RESTRAINT SYSTEMS OF UNIVERSAL AND SEMI-UNIVERSAL CATEGORIES INSTALLED ON ISOFIX POSITIONS

1. GENERAL

1.1. The test procedure and the requirements in this appendix shall be used to determine the suitability of Isofix positions for the installation of Isofix child restraint systems of universal and semi-universal categories.

1.2. The tests may be carried out in the vehicle or in a representative part of the vehicle.

2. TEST PROCEDURE

For any Isofix position in the vehicle, as indicated by the car manufacturer, in table 2 of Appendix 3, it has to be checked that it is possible to accommodate the corresponding child restraint fixture(s) (CRF):

2.1. When checking a CRF on a seat, this seat may be adjusted longitudinally to its rearmost position and in its lowest position.

2.2. Adjust the seat-back angle to the manufacturer's design position and the head restraint in the lowest and rearmost position. In the absence of any specification an angle of the seat-back corresponding to a torso angle of 25° from the vertical, or the nearest fixed position of the seat-back, shall be used.

When checking a CRF on a rear seat, the vehicle seat located in front of this rear seat may be adjusted longitudinally forward but not further than the mid position between its rearmost and fore most positions. The seat backrest angle may also be adjusted, but not to a more upright angle than corresponding to a torso angle of 15°.

2.3. Place a cotton cloth on the seat-back and cushion.

2.4. Place the CRF on the Isofix position.

2.5. Push, towards Isofix anchorages system, on the center between the ISOFIX anchorages with a force of 100 N ± 10 N, applied parallel to the lower surface, and remove the force.

2.6. Attach the CRF to the Isofix anchorages system.

2.7. Push vertically downwards on the centre of the upper surface of the fixture with a force of 100 N ± 10 N, and remove the force.

3. REQUIREMENTS

The following testing conditions only apply for the CRF(s) when accommodated in the Isofix position. It is not required that the CRF(s) shall be possible to move in and out of the Isofix position under these conditions.

3.1. It has to be possible to accommodate the CRF(s) without interference with the vehicle interior. The CRF base shall have a pitch angle of 15° ± 10°, above the horizontal plane passing through the Isofix anchorages system.

3.2. The Isofix top tether anchorage, if any, shall remain accessible.

3.3 Should the above requirements not be met with the adjustments indicated in paragraph 2. above, the seats, the seat-backs, the head restraints may be adjusted to alternative positions designated by the manufacturer for normal use following which the above installation procedure shall be repeated and the requirements verified and met. These alternative positions shall be included as information in Table 2 given in Appendix 3 to this annex.

3.4 Should the above requirements not be fulfilled when some removable interior fittings were present, such fittings may be removed and then requirements of paragraph 3. have to be verified again and fulfilled. In such a case corresponding information shall be included in Table 2 of Appendix 3 of this annex.

4. ISOFIX CHILD RESTRAINT SYSTEM SIZE CLASSES AND FIXTURES

A — ISO/F3: Full-height forward facing toddler CRS
B — ISO/F2: Reduced-height forward facing toddler CRS
B1 — ISO/F2X: Reduced-height forward facing toddler CRS
C — ISO/R3: Full-size rearward facing toddler CRS
D — ISO/R2: Reduced-size rearward facing toddler CRS
E — ISO/R1: Rearward facing infant CRS
F — ISO/L1: Left lateral facing position CRS (carry-cot)
G — ISO/L2: Right lateral facing position CRS (carry-cot)

Mass group	Isofix size class	Fixture (CRF)
0 — up to 10 kg	F	ISO/L1
	G	ISO/L2
	E	ISO/R1
0+ — up to 13 kg	C	ISO/R3
	D	ISO/R2
	E	ISO/R1
I — 9 to 18 kg	A	ISO/F3
	B	ISO/
	B1	ISO/F2X
	C	ISO/R3
	D	ISO/R2

The fixtures below shall be constructed with a mass between 5 and 15 kg and shall be of suitable durability and stiffness to satisfy the functional requirements.

4.1. **Full-height forward-facing toddler child restraint systems envelope**

Figure 1

ISO/F3 envelope dimensions for a full-height forward-facing toddler CRS (height 720 mm) ISOFIX SIZE CLASS A

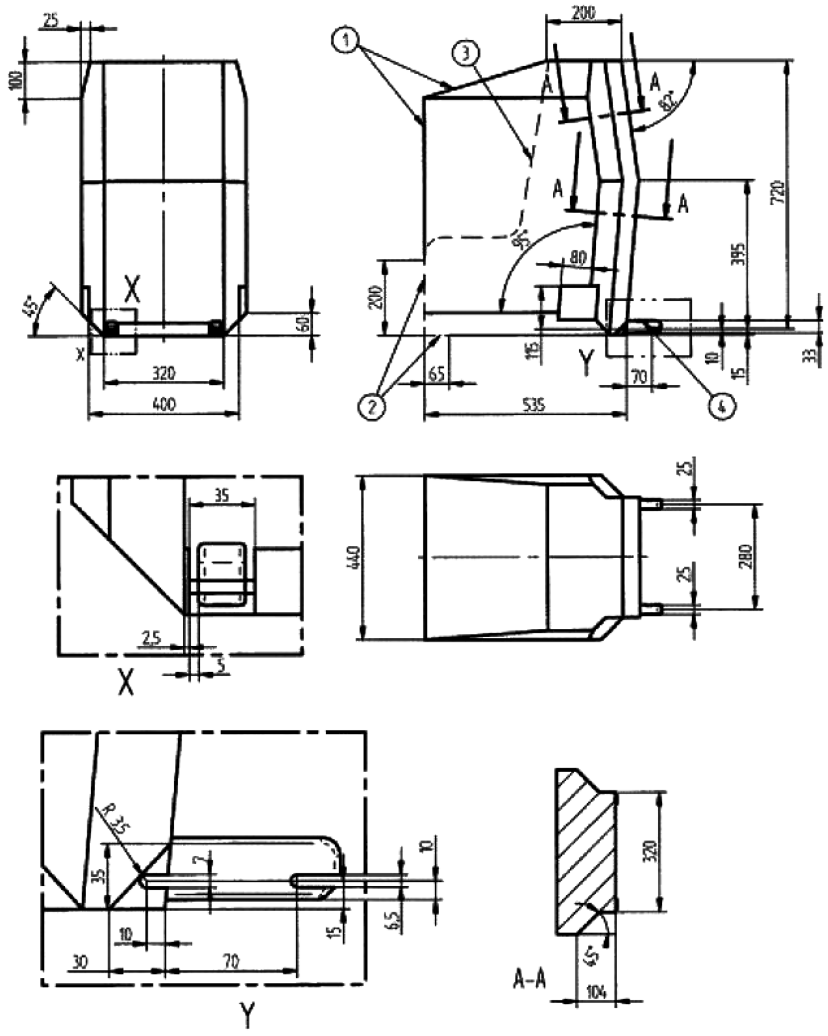

Key

1 Limits in the forward and upwards directions
2 Dashed line marks area where a support leg, or similar, is allowed to protrude
3 N/A
4 Further specifications of the connector area are given in Regulation No 44

4.2. **Reduced-height forward-facing toddler child restraint systems envelope**

Figure 2

ISO/F2 envelope dimensions for a reduced-height forward-facing toddler CRS, (height 650 mm) — ISOFIX SIZE CLASS B

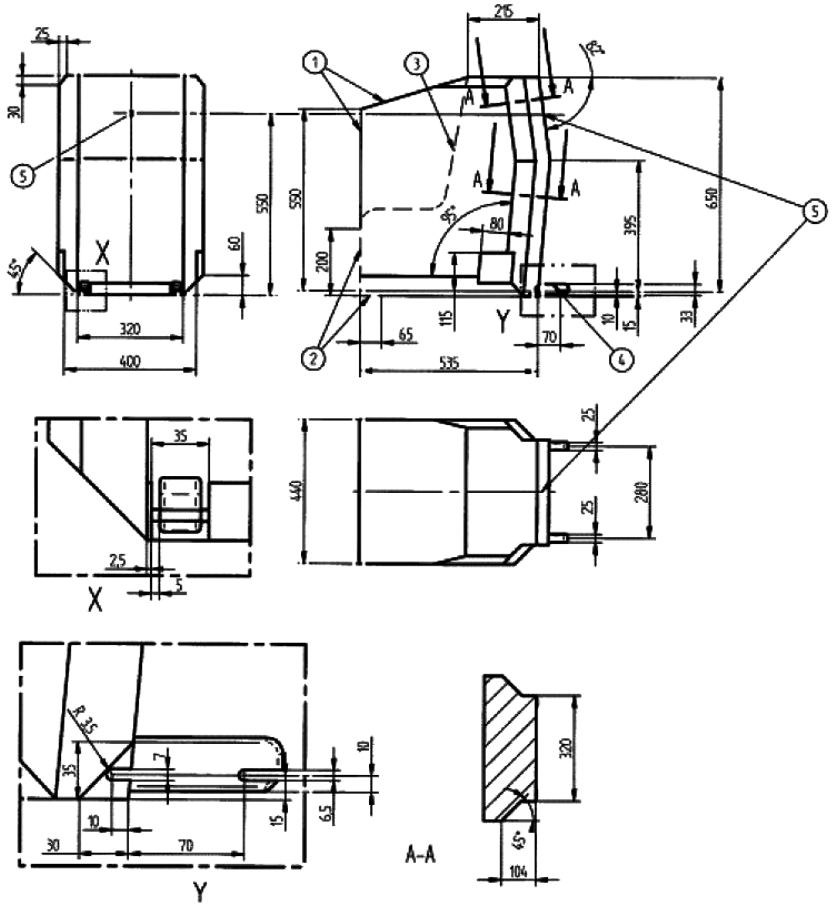

Key

1 Limits in the forward and upwards directions
2 Dashed line marks area where a support leg, or similar, is allowed to protrude
3 N/A
4 Further specifications of the connector area are given in Regulation No 44
5 Attachment point for the top tether strap

4.3. **Reduced-height second version back shape forward-facing toddler child restraint systems envelope**

Figure 3

ISO/F2X envelope dimensions for a reduced-height second version back surface shape forward-facing toddler CRS, (height 650 mm) — ISOFIX SIZE CLASS B1

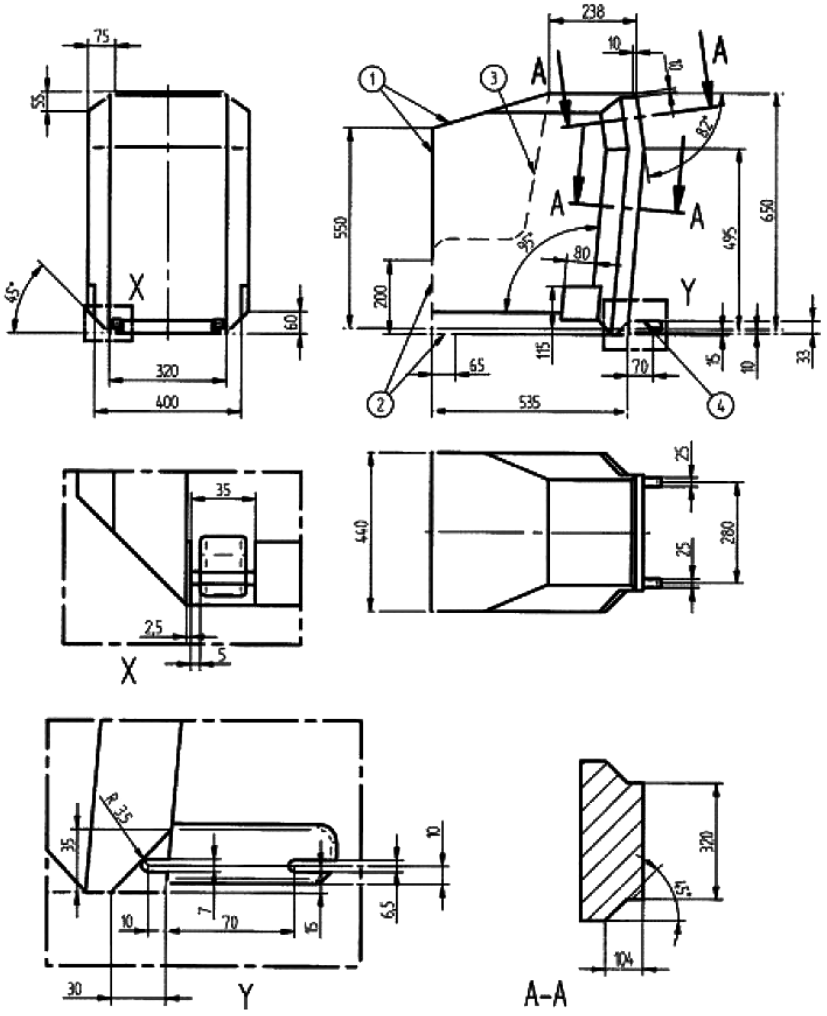

Key

1 Limits in the forward and upwards directions
2 Dashed line marks area where a support leg, or similar, is allowed to protrude
3 N/A
4 Further specifications of the connector area are given in Regulation No 44

4.4. **Full-size rearward facing toddler child restraint system envelope**

Figure 4

ISO/R3 envelope dimensions for a full-size rearward-facing toddler CRS ISOFIX SIZE CLASS C

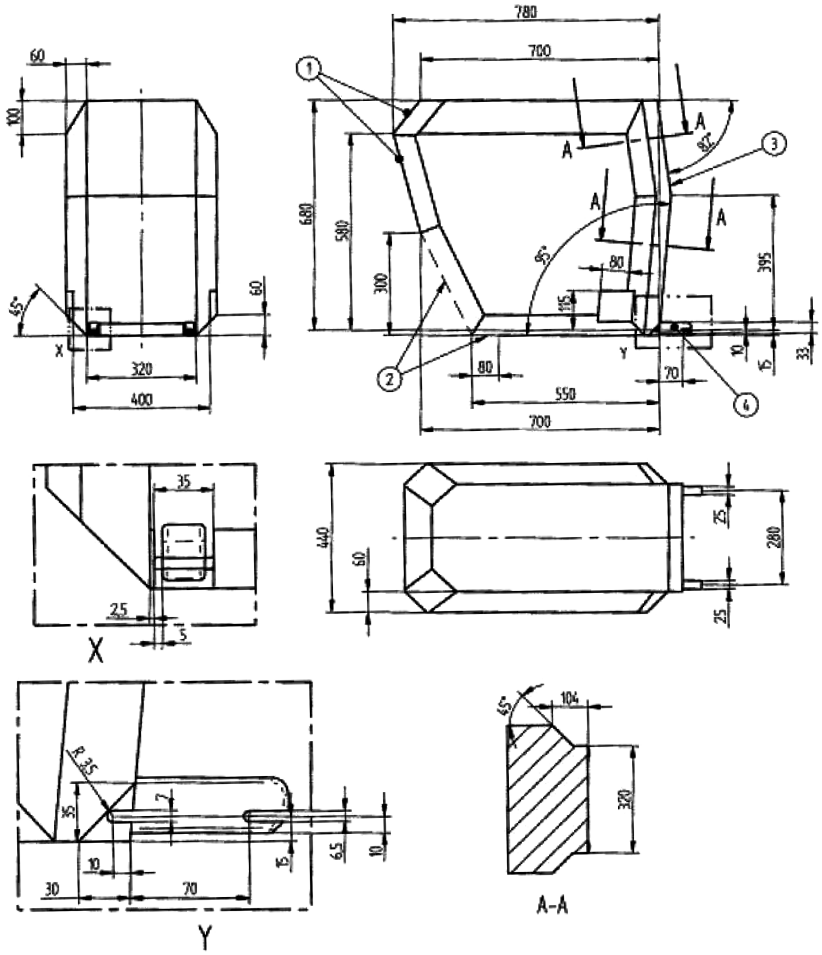

Key

1 Limits in the rearward and upwards directions
2 Dashed line marks area where a support leg, or similar, is allowed to protrude
3 The backwards limitation (to the right in the figure) is given by the forward-facing envelope in Figure 2
4 Further specifications of the connector area are given in Regulation No 44

4.5. **Reduced-size rearward-facing toddler child restraint systems envelope**

Figure 5

ISO/R2 envelope dimensions for a reduced-size rearward-facing toddler CRS ISOFIX SIZE CLASS D

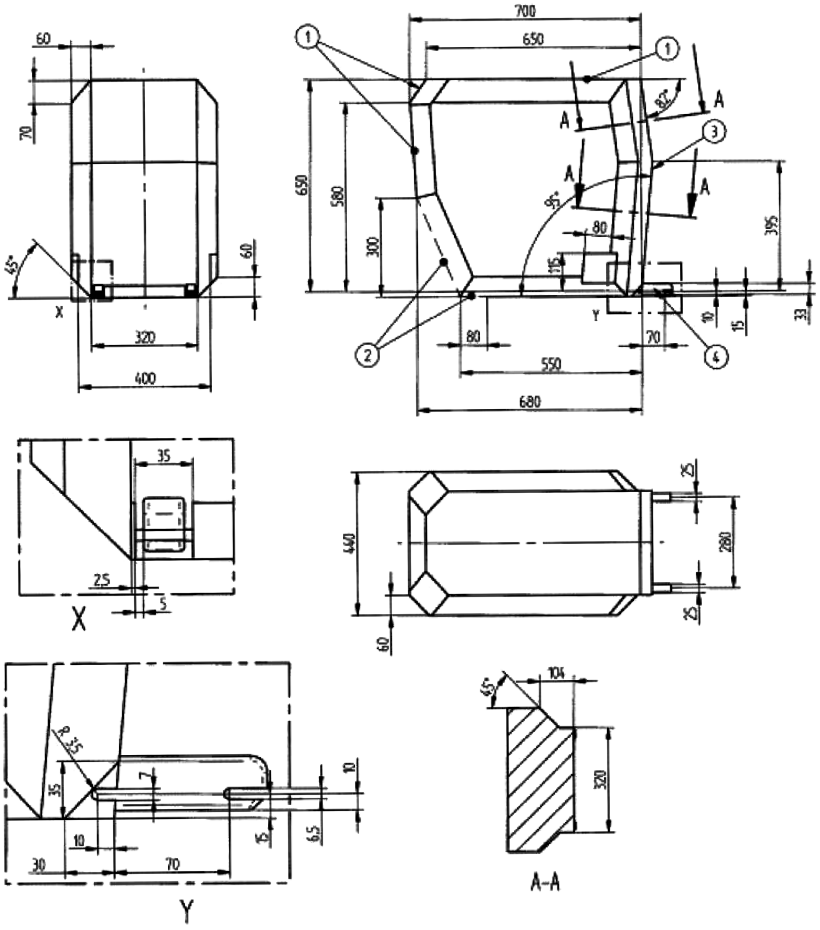

Key

1 Limits in the rearward and upwards directions
2 Dashed line marks area where a support leg, or similar, is allowed to protrude
3 The backwards limitation (to the right in the figure) is given by the forward-facing envelope in Figure 2
4 Further specifications of the connector area are given in Regulation No 44

4.6. **Rearward facing infant child restraint systems envelope**

Figure 6

ISO/R1 envelope dimensions for an infant-size rearward-facing CRS ISOFIX SIZE CLASS E

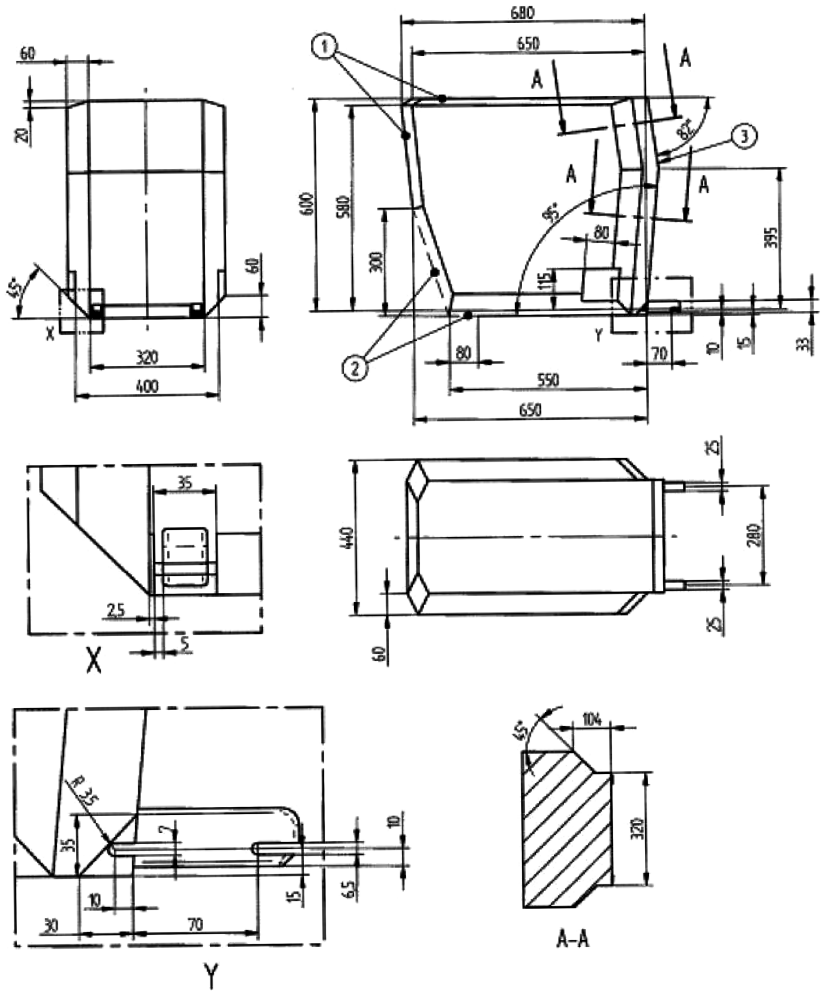

Key

1 Limits in the rearward and upward directions
2 Dashed line marks area where a support leg, or similar, is allowed to protrude
3 The backwards limitation (to the right in the figure) is given by the forward-facing envelope in Figure 2
4 Further specifications of the connector area are given in Regulation No 44

4.7. **Lateral facing child restraint systems envelope**

Figure 7

Envelope dimensions for lateral facing position CRS — ISO/L1- ISOFIX SIZE CLASS F or symmetrically opposite — ISO/L2 — ISOFIX CLASS G

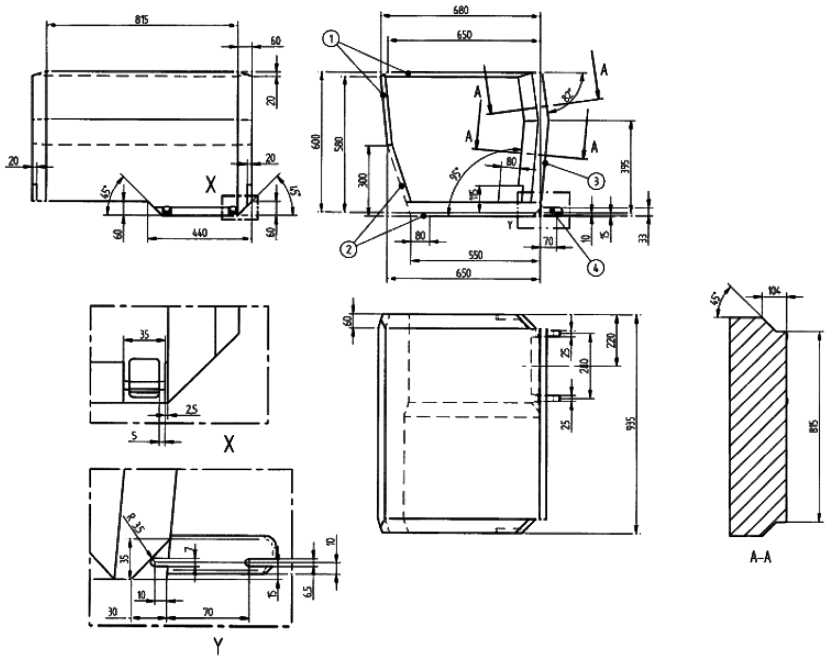

Key

1 Limits in the rearward and upward directions
2 Dashed line marks area where a support leg, or similar, is allowed to protrude
3 The backward limitation (to the right in the figure) is given by the forward-facing envelope in Figure 2
4 Further specifications of the connector area are given in ISO 13216-1, Figures 2 and 3

Appendix 3

Table 1

Table of vehicle handbook information on child restraint systems installation suitability for various seating positions

Mass Group		Seating position (or other site)				
		Front passenger	Rear outboard	Rear centre	Intermediate outboard	Intermediate centre
Group 0	up to 10 kg					
Group 0+	up to 13 kg					
Group I	9 to 18 kg					
Group II	15 to 25 kg					
Group III	22 to 36 kg					

Key of letters to be inserted in the above table:

U = Suitable for 'universal' category restraints approved for use in this mass group.

UF = Suitable for forward-facing 'universal' category restraints approved for use in this mass group.

L = Suitable for particular child restraints given on attached list. These restraints may be of the 'specific vehicle', 'restricted' or 'semi-universal' categories.

B = Built-in restraint approved for this mass group.

X = Seat position not suitable for children in this mass group.

Table 2

Table of vehicle handbook information on isofix child restraint systems installation suitability for various ISOFIX positions

Mass Group	Size class	Fixture	Vehicle ISOFIX positions					
			Front passenger	Rear outboard	Rear centre	Intermediate outboard	Intermediate centre	Other sites
carrycot	F	ISO/L1						
	G	ISO/L2						
		(1)						
0 — up to 10 Kg	E	ISO/R1						
		(1)						
0+ — up to 13 kg	E	ISO/R1						
	D	ISO/R2						
	C	ISO/R3						
		(1)						

Mass Group	Size class	Fixture	Vehicle ISOFIX positions					
			Front passenger	Rear outboard	Rear centre	Intermediate outboard	Intermediate centre	Other sites
I — 9 to 18 kg	D	ISO/R2						
	C	ISO/R3						
	B	ISO/F2						
	B1	ISO/F2X						
	A	ISO/F3						
		(1)						
II — 15 to 25 kg		(1)						
III — 22 to 36 kg		(1)						

(1) For the CRS which do not carry the ISO/XX size class identification (A to G), for the applicable mass group, the car manufacturer shall indicate the vehicle specific Isofix child restraint system(s) recommended for each position.

Key of letters to be inserted in the above table

IUF = suitable for Isofix forward child restraints systems of universal category approved for use in the mass group.
IL = suitable for particular Isofix child restraint systems (CRS) given in the attached list. These Isofix CRS are those of the 'specific vehicle', 'restricted' or 'semi-universal' categories.
X = Isofix position not suitable for Isofix child restraint systems in this mass group and/or this size class.