II

(Non-legislative acts)

REGULATIONS

COMMISSION REGULATION (EU) 2022/1379

of 5 July 2022

amending Regulation (EU) 2017/2400 as regards the determination of the CO_2 emissions and fuel consumption of medium and heavy lorries and heavy buses and to introduce electric vehicles and other new technologies

(Text with EEA relevance)

THE EUROPEAN COMMISSION,

Having regard to the Treaty on the Functioning of the European Union,

Having regard to Regulation (EC) No 595/2009 of the European Parliament and of the Council of 18 June 2009 on type-approval of motor vehicles and engines with respect to emissions from heavy duty vehicles (Euro VI) and on access to vehicle repair and maintenance information ([1]), and in particular Article 4(3) and Article 5(4), point (e), thereof,

Whereas:

(1) Commission Regulation (EU) 2017/2400 ([2]) introduces a common method to objectively compare the performance of heavy-duty vehicles placed on the Union market as regards their CO_2 emissions and fuel consumption. It lays down provisions for the certification of components with an impact on CO_2 emissions and fuel consumption of heavy-duty vehicles, introduces a simulation tool for the purpose of determining and declaring CO_2 emissions and fuel consumption of those vehicles, and lays down, inter alia, requirements for Member States' authorities and manufacturers to verify the conformity of the certification of the components and the conformity of the simulation tool operation.

(2) Regulation (EU) 2018/858 of the European Parliament and of the Council ([3]) has moved the rules on access to vehicle on-board diagnostic information and vehicle repair and maintenance information from Regulation (EC) No 595/2009. In order to align the wording of Regulation (EU) 2017/2400 to the changed wording of Regulation (EC) No 595/2009, the references to on-board diagnostic information and vehicle repair and maintenance information need to be removed from Regulation (EU) 2017/2400.

(3) Regulation (EU) 2017/2400 determines CO_2 emissions and fuel consumption of heavy lorries. However, in order to provide a better view on CO_2 emissions, CO_2 emissions of more vehicles need to be calculated. It is therefore necessary to determine CO_2 emissions and fuel consumption of other heavy duty vehicles, namely medium lorries and heavy buses.

(4) To appropriately cover future technologies, it is necessary to specify additional requirements for new technologies such as hybrid and pure electric vehicles, dual-fuel vehicles, waste heat recovery and advanced driver assistance systems.

(5) As the on-road verification testing procedure has proved to be an important tool for the verification of calculations of CO_2 emissions and fuel consumption, it is appropriate for it to apply for medium lorries and new technologies. However, due to the complexities of the multi-stage production and approval system that applies for heavy buses, it is not possible at this moment to have the on-road verification testing procedure extended to them.

([1]) OJ L 188, 18.7.2009, p. 1.
([2]) Commission Regulation (EU) 2017/2400 of 12 December 2017 implementing Regulation (EC) No 595/2009 of the European Parliament and of the Council as regards the determination of the CO_2 emissions and fuel consumption of heavy-duty vehicles and amending Directive 2007/46/EC of the European Parliament and of the Council and Commission Regulation (EU) No 582/2011 (OJ L 349, 29.12.2017, p. 1).
([3]) Regulation (EU) 2018/858 of the European Parliament and of the Council of 30 May 2018 on the approval and market surveillance of motor vehicles and their trailers, and of systems, components and separate technical units intended for such vehicles, amending Regulations (EC) No 715/2007 and (EC) No 595/2009 and repealing Directive 2007/46/EC (OJ L 151, 14.6.2018, p. 1).

(6) Some definitions and requirements in Regulation (EU) 2017/2400 need further clarification and corrections, including further alignment to the CO_2 emission performance standards for new heavy-duty vehicles laid down in Regulation (EU) 2019/1242 of the European Parliament and of the Council [4].

(7) In order to provide Member States, national authorities and economic operators with sufficient time to prepare for the application of the rules introduced by this Regulation, the date of application of this Regulation should be deferred.

(8) As certain manufacturers may prefer to meet the requirements set out in this Regulation before its date of application, they should have the possibility to obtain a licence to operate the simulation tool and receive a certification for components in accordance with the rules introduced by this Regulation before its date of application.

(9) For certain groups of vehicles and certain technologies the simulation tool required for the obligation to determine and declare CO_2 emissions and fuel consumption of new vehicles, will only be available after the general application date of this Regulation. In these cases the requirements can only be required from the moment of availability of the simulation tool. This is why some provisions of this Regulation shall only apply from a later date.

(10) The measures provided for in this Regulation are in accordance with the opinion of the Technical Committee – Motor Vehicles,

HAS ADOPTED THIS REGULATION:

Article 1

Regulation (EU) 2017/2400 is amended as follows:

(1) Articles 1 and 2 are replaced by the following:

'Article 1

Subject matter

This Regulation complements the legal framework for the type-approval of motor vehicles and engines with regard to emissions established by Regulation (EU) No 582/2011 by laying down the rules for issuing licences to operate a simulation tool with a view to determining CO_2 emissions and fuel consumption of new vehicles to be sold, registered or put into service in the Union and for operating that simulation tool and declaring the CO_2 emissions and fuel consumption values thus determined.

Article 2

Scope

1. Subject to Article 4, second paragraph, this Regulation shall apply to medium lorries, heavy lorries and heavy buses.

2. In the case of multi-stage type-approvals or individual approvals of medium and heavy lorries, this Regulation shall apply to base lorries.

In the case of heavy buses, this Regulation shall apply to primary vehicles, interim vehicles and to complete vehicles or completed vehicles.

3. This Regulation shall not apply to off-road vehicles, special purpose vehicles and off-road special purpose vehicles as defined, respectively, in Part A, points 2.1., 2.2. and 2.3., of Annex I to Regulation (EU) 2018/858 of the European Parliament and of the Council (*).

(*) Regulation (EU) 2018/858 of the European Parliament and of the Council of 30 May 2018 on the approval and market surveillance of motor vehicles and their trailers, and of systems, components and separate technical units intended for such vehicles, amending Regulations (EC) No 715/2007 and (EC) No 595/2009 and repealing Directive 2007/46/EC (OJ L 151, 14.6.2018, p. 1).';

[4] Regulation (EU) 2019/1242 of the European Parliament and of the Council of 20 June 2019 setting CO_2 emission performance standards for new heavy-duty vehicles and amending Regulations (EC) No 595/2009 and (EU) 2018/956 of the European Parliament and of the Council and Council Directive 96/53/EC (OJ L 198, 25.7.2019, p. 202).

(2) Article 3 is amended as follows:

(a) the first paragraph is amended as follows:

(1) points 10, 11 and 12 are replaced by the following:

'(10) "axle" means a component comprising all rotating parts of the driveline which transfer the driving torque coming from the prop shaft to the wheels and changes the torque and speed with a fixed ratio and including the functions of a differential gear;

(11) "air drag" means characteristic of a vehicle configuration regarding aerodynamic force acting on the vehicle in the direction of air flow and determined as a product of the drag coefficient and the cross sectional area for zero crosswind conditions;

(12) "auxiliaries" means vehicle components including an engine fan, steering system, electric system, pneumatic system and Heating, Ventilation and Air Conditioning (HVAC) system whose CO_2 emissions and fuel consumption properties have been defined in Annex IX;';

(2) points 15 to 18 are replaced by the following:

'(15) "zero emission heavy-duty vehicle" (Ze-HDV) means "zero emission heavy-duty vehicle" as defined in Article 3, point (11), of Regulation (EU) 2019/1242 of the European Parliament and of the Council;

(16) "vocational vehicle" means a heavy-duty vehicle not intended for the delivery of goods and for which one of the following digits is used to supplement the bodywork codes, as listed in Appendix 2 to Annex I to Regulation (EU) 2018/858: 09, 10, 15, 16, 18, 19, 20, 23, 24, 25, 26, 27, 28, 31; or a tractor with a maximum speed not exceeding 79 km/h;

(17) "rigid lorry" means a "lorry" as defined in Part C, point 4.1, of Annex I to Regulation (EU) 2018/858, except for the lorries designed or constructed for the towing of a semi-trailer;

(18) "tractor" means a "tractor unit for semi-trailer" as defined in Part C, point 4.3, of Annex I to Regulation (EU) 2018/858'

(3) paragraph 20 is replaced by the following:

'(20) "hybrid electric heavy-duty vehicle" (He-HDV) means a hybrid heavy duty vehicle that, for the purpose of mechanical propulsion, draws energy from both of the following on-vehicle sources of stored energy or power: (i) a consumable fuel, and (ii) an electrical energy or power storage device;';

(4) the following points (22) to (39) are added:

'(22) "primary vehicle" means a heavy bus in a virtual assembly condition determined for simulation purposes, for which the input data and input information as set out in Annex III is used;

(23) "manufacturer's records file" means a file produced by the simulation tool which contains manufacturer related information, a documentation of the input data and input information to the simulation tool and the results for CO_2 emissions and fuel consumption;

(24) "customer information file" means a file produced by the simulation tool which contains a defined set of vehicle related information and the results for CO_2 emissions and fuel consumption as defined in Part II of Annex IV;

(25) "vehicle information file" (VIF) means a file produced by the simulation tool for heavy buses to transfer the relevant input data, input information and simulation results to subsequent manufacturing stages following the method as described in point (2) of Annex I;

(26) "medium lorry" means a vehicle of category N_2, as defined in Article 4(1), point (b)(ii), of Regulation (EU) 2018/858, with a technically permissible maximum laden mass exceeding 5 000 kg and not exceeding 7 400 kg;

(27) "heavy lorry" means a vehicle of category N_2, as defined in Article 4(1), point (b)(ii), of Regulation (EU) 2018/858, with a technically permissible maximum laden mass exceeding 7 400 kg and a vehicle of category N_3, as defined in Article 4(1), point (b)(iii), of that Regulation;

(28) "heavy bus" means a vehicle of category M_3, as defined in Article 4(1), point (a)(iii), of Regulation (EU) 2018/858, with a technically permissible maximum laden mass of more than 7 500 kg;

(29) "primary vehicle manufacturer" means a manufacturer responsible for the primary vehicle;

(30) "interim vehicle" means any further completion of a primary vehicle where a sub-set of input data and input information as defined for the complete or completed vehicle in accordance with Table 1 and Table 3a of Annex III is added and/or modified;

(31) "interim manufacturer" means a manufacturer responsible for an interim vehicle;

(32) "incomplete vehicle" means "incomplete vehicle" as defined in Article 3, point (25), of Regulation (EU) 2018/858;

(33) "completed vehicle" means "completed vehicle" as defined in Article 3, point (26), of Regulation (EU) 2018/858;

(34) "complete vehicle" means "complete vehicle" as defined in Article 3, point (27), of Regulation (EU) 2018/858;

(35) "standard value" is input data for the simulation tool for a component where certification of input data is applicable, but the component has not been tested to determine a specific value and which reflects the worst-case performance of a component;

(36) "generic value" is data used in the simulation tool for components or vehicle parameters where no component testing or declaration of specific values is foreseen and which reflects performance of average component technology or typical vehicle specifications;

(37) "van" means a "van" as defined in Part C, point 4.2, of Annex I to Regulation (EU) 2018/858;

(38) "application case" means the different scenarios to be followed in the case of a medium lorry, heavy lorry, heavy bus that is a primary vehicle, heavy bus that is an interim vehicle, heavy bus that is a complete vehicle or completed vehicle for which different manufacturer provisions and functions are applicable in the simulation tool;

(39) "base lorry" means a medium lorry or heavy lorry equipped at least with:

— a chassis, engine, transmission, axles and tyres, in the case of pure internal combustion engine vehicles;

— a chassis, electric machine system and/or integrated electric powertrain component, battery system(s) and/or capacitor system(s) and tyres, in the case of pure electric vehicles;

— a chassis, engine, electric machine system and/or integrated electric powertrain component and/or integrated hybrid electric vehicle powertrain component type 1, battery system(s) and/or capacitor system(s) and tyres, in the case of hybrid electric heavy-duty vehicles.';

(b) the second paragraph is deleted;

(3) Article 4 is replaced by the following:

'*Article 4*

Vehicle groups

For the purpose of this Regulation, motor vehicles shall be classified in vehicle groups in accordance with Annex I, Tables 1 to 6.

Articles 5 to 23 do not apply to heavy lorries of vehicle groups 6, 7, 8, 13, 14, 15, 17, 18 and 19 as set out in Table 1 of Annex I, and to medium lorries of vehicle groups 51, 52, 55 and 56, as set out in Table 2 of Annex I and to any vehicle with a driven front axle in the vehicle groups 11, 12 and 16 as set out in Table 1 of Annex I.';

(4) in Article 5(3), the first sentence is replaced by the following:

'The simulation tool shall be used for the purposes of determining CO_2 emissions and fuel consumption of new vehicles.';

(5) in Article 5, paragraph 5 is replaced by the following:

'5. The hashing tools shall be used for establishing an unequivocal association between the certified CO_2 emission and fuel consumption related properties of a component, separate technical unit or system and its certification document, as well as for establishing an unequivocal association between a vehicle and its manufacturer's records file, vehicle information file and customer information file as referred to in Annex IV.';

(6) in Chapter 2, the title is replaced by the following:

'LICENCE TO OPERATE THE SIMULATION TOOL FOR THE PURPOSES OF TYPE-APPROVAL WITH REGARD TO EMISSIONS';

(7) Article 6 is amended as follows:

(a) paragraph 1 is replaced by the following:

'1. The vehicle manufacturer shall submit to the approval authority an application for a licence to operate the simulation tool for an application case with a view to determining CO_2 emissions and fuel consumption of new vehicles belonging to one or more vehicle groups ("licence"). An individual licence shall apply to only a single such application case.

The application for a licence shall be accompanied by an adequate description of the processes set up by the vehicle manufacturer with a view to the operation of the simulation tool with respect to the application case concerned, as set out in point (1) of Annex II.';

(b) paragraph 4 is replaced by the following:

'4. The vehicle manufacturer shall submit the application for a licence to the approval authority at the latest together with the application for an EC type-approval of a vehicle with an approved engine system with regard to emissions pursuant to Article 7 of Regulation (EU) No 582/2011, with the application for an EC type-approval of a vehicle with regard to emissions pursuant to Article 9 of that Regulation, with an application for a whole-vehicle type-approval pursuant to Regulation (EU) 2018/858 or the application for a national individual vehicle approval. The approval of a pure electric engine system and the EC type-approval of a pure electric vehicle with regard to emissions referred to in the previous sentence is limited to the measurement of net engine power in accordance with Annex XIV to Regulation (EU) No 582/2011.

The application for a licence must concern the application case which includes the type of vehicle concerned by the application for EU type-approval.';

(8) Article 7(1) is replaced by the following:

'1. The approval authority shall grant the licence if the vehicle manufacturer submits an application in accordance with Article 6 and proves that the requirements laid down in Annex II are met with respect to the application case concerned.';

(9) Article 8 is amended as follows:

(a) paragraph 1 is deleted;

(b) paragraph 3 is replaced by the following:

'3. After obtaining the licence, the vehicle manufacturer shall notify the approval authority without delay of any changes to the processes set up by it for the purposes of the licence for the application case covered by the licence that may affect the accuracy, reliability and stability of those processes.';

(10) Article 9 is amended as follows:

(a) paragraph 1 is replaced by the following:

'1. A vehicle manufacturer shall determine the CO_2 emissions and fuel consumption of each new vehicle, with the exception of new vehicles using vehicle technologies listed in Appendix 1 to Annex III, to be sold, registered or put into service in the Union using the latest available version of the simulation tool referred to in Article 5(3). With regard to heavy buses the vehicle manufacturer or interim manufacturer shall use the method set out in Annex I, point (2).

For vehicle technologies listed in Appendix 1 to Annex III to be sold, registered or put into service in the Union, the vehicle manufacturer or interim manufacturer shall determine only the input parameters specified for those vehicles in the models set out in Table 5 of Annex III, using the latest available version of the simulation tool referred to in Article 5(3).

A vehicle manufacturer may operate the simulation tool for the purposes of this Article only if in possession of a licence granted for the application case concerned in accordance with Article 7. An interim manufacturer operates the simulation tool under the licence of a vehicle manufacturer.';

(b) in paragraph 2, the following subparagraph is added:

'Vehicle manufacturers of heavy buses additionally shall record the results of the simulation in the vehicle information file. Interim manufacturers of heavy buses shall record the vehicle information file.';

(c) paragraph 3 is replaced by the following:

'3. The vehicle manufacturer of medium lorries and heavy lorries shall create cryptographic hashes of the manufacturer's records file and of the customer information file.

The primary vehicle manufacturer shall create cryptographic hashes of the manufacturer's records file and of the vehicle information file.

The interim manufacturer shall create the cryptographic hash of the vehicle information file.

The vehicle manufacturer of complete vehicles or completed vehicles that are heavy buses, shall create cryptographic hashes of the manufacturer's records file, of the customer information file and of the vehicle information file.';

(d) paragraph 4 is amended as follows:

(1) the first subparagraph is replaced by the following:

'Lorries and complete vehicles or completed vehicles that are heavy buses to be registered, sold or to enter into service shall be accompanied by the customer information file drawn up by the manufacturer in accordance with the model set out in Part II of Annex IV.';

(2) the following subparagraph is added:

'Vehicle manufacturers of heavy buses shall make the vehicle information file available to the manufacturer of a subsequent step in the chain.';

(e) paragraph 5 is replaced by the following:

'5. For each vehicle accompanied by a certificate of conformity or, in the case of vehicles approved in accordance with Article 45 of Regulation (EU) 2018/858, an individual vehicle approval certificate, the certificate shall include an imprint of the cryptographic hashes referred to in paragraph 3 of this Article.';

(f) the following paragraph is added:

'6. In accordance with point 11 of Annex III, a manufacturer may transfer results of the simulation tool to other vehicles.';

(11) in Article 10(3), the following subparagraph is added:

'Where a malfunction of the simulation tool occurs at a step in the manufacturing chain of heavy buses prior to the complete or completed manufacturing steps, the obligation under Article 9(1) to operate the simulation tool at the subsequent manufacturing steps shall be postponed for a maximum of 14 calendar days after the date on which the manufacturer at the previous step made the vehicle information file available to the manufacturer of the complete or completed step.';

(12) in Article 11, paragraphs 1 and 2 are replaced by the following:

'1. The manufacturer's records file, the vehicle information file and the certificates on CO_2 emissions and fuel consumption related properties of the components, systems and separate technical units shall be stored by the vehicle manufacturer for at least 20 years after the production of the vehicle and shall be available, upon request, to the approval authority and to the Commission.

2. Upon request by an authorised entity of a Member State or by the Commission, the vehicle manufacturer shall provide, within 15 working days, the manufacturer's records file or the vehicle information file.';

(13) Article 12 is amended as follows:

(a) paragraph 1 is amended as follows:

(1) point (g) is replaced by the following:

'(g) air drag;';

(2) the following point (j) is added:

'(j) electric powertrain components.';

(b) paragraph 2 is replaced by the following:

'2. The CO_2 emissions and fuel consumption related properties of the components, separate technical units and systems referred to in points (b) to (g), (i) and (j) of paragraph 1 of this Article shall be based either on the values determined, for each component, separate technical unit, system or if applicable their respective family, in accordance with Article 14 and certified in accordance with Article 17 ("certified values") or, in the absence of the certified values, on the standard values determined in accordance with Article 13.';

(c) paragraphs 4 to 7 are replaced by the following:

'4. The CO_2 emissions and fuel consumption related properties of auxiliaries shall be based on the generic values as implemented in the simulation tool and as allocated to a vehicle based on the input information to be determined in accordance with Annex IX.

5. In the case of a base lorry, the CO_2 emissions and fuel consumption related properties of components, separate technical units and systems referred to in paragraph 1, point (g), of this Article, which cannot be determined for the base lorries shall be based on the standard values. For components, separate technical units and systems referred to in paragraph 1, point (h), the technology with highest power losses shall be selected by the vehicle manufacturer.

6. In the case of vehicles exempted from the obligation to determine the CO_2 emissions and fuel consumption under Article 9(1), the simulation tool input data shall include the information set out in Table 5 of Annex III.

7. Where the vehicle is to be registered, sold or put into service with a complete set of snow tyres and a complete set of standard tyres, the vehicle manufacturer may choose which of the tyres to use for determining the CO_2 emissions. In the case of heavy buses, as long as the tyres used in the primary vehicle simulation are with the vehicle when it is registered, sold or put into service, addition of tyre sets to the vehicle shall not result in the obligation to conduct a new primary vehicle simulation in accordance with point 2 of Annex I.';

(14) Article 13 is amended as follows:

(a) the heading is replaced by the following:

'Standard values and generic values';

(b) paragraphs 7 and 8 are replaced by the following:

'7. For auxiliaries generic values are allocated by the simulation tool in accordance with the technologies selected in accordance with Annex IX.

8. The standard value for tyres shall be determined in accordance with Annex X, point 3.2.';

(c) the following paragraph is added:

'9. The standard values for electric powertrain components shall be determined in accordance with Appendices 8, 9 and 10 to Annex Xb.';

(15) Article 14 is amended as follows:

(a) paragraphs 1 and 2 are replaced by the following:

'1. The values determined in accordance with paragraphs 2 to 10 of this Article may be used by the vehicle manufacturer as the simulation tool input data if they are certified in accordance with Article 17.

2. The certified values for engines shall be determined in accordance with points 4, 5 and 6 of Annex V.';

(b) the following paragraph 10 is added:

'10. The certified values for electric powertrain components shall be determined in accordance with points 4, 5 and 6 of Annex Xb.';

(16) Article 15 is amended as follows:

(a) in paragraph 1, the following indents are added:

'— Appendix 3 to Annex V as regards engines, the certified values for the members of an engine family created in accordance with the family definition shall be derived in accordance with points 4, 5 and 6 of Annex V;

— Appendix 13 to Annex Xb as regards the family concept of electric machine systems or integrated electric powertrain components, the certified values for the members of a family created in accordance with the family definition of electric machine systems, shall be derived in accordance with point 4 of Annex Xb.';

(b) paragraph 2 is replaced by the following:

'2. For engines, the certified values for the members of an engine family shall be derived in accordance with points 4, 5 and 6 of Annex V.

For tyres, a family shall consist of one tyre type only.

For electric machine systems or integrated electric powertrain components, the certified values for the members of a family of electric machine systems shall be derived in accordance with point 4 of Annex Xb.';

(17) Article 16 is amended as follows:

(a) paragraph 1 is replaced by the following:

'1. The application for certification of the CO_2 emissions and fuel consumption related properties of the component, separate technical unit and systems, or if applicable their respective families, shall be submitted to the approval authority.';

(b) in paragraph 2, the following indent is added:

'— Appendixes 2 to 6 to Annex Xb as regards electric powertrain components.';

(c) paragraph 3 is replaced by the following:

'3. The application for certification shall be accompanied by an explanation of the elements of design of the component, separate technical unit and system, or if applicable their respective families concerned which have a non-negligible effect on the CO_2 emissions and fuel consumption related properties of the components, separate technical units or systems concerned.

The application shall also be accompanied by the relevant test reports issued by an approval authority, test results, and by a statement of compliance issued by an approval authority pursuant to point 2 of Annex IV to Regulation (EU) 2018/858.';

(18) Article 17 is amended as follows:

(a) Paragraph 1 is replaced by the following:

'1. If all the applicable requirements are met, the approval authority shall certify the values relating to the CO_2 emissions and fuel consumption related properties of the component, separate technical unit and system, or if applicable their respective families concerned.';

(b) in paragraph 2, the following indent is added:

'— Appendix 1 to Annex Xb as regards electric powertrain components.';

(c) in paragraph 3, the following indent is added:

'— Appendix 14 to Annex Xb as regards electric powertrain components.';

(d) in paragraph 3, the second subparagraph is replaced by the following:

'The approval authority shall not assign the same number to another component, separate technical unit and system, or if applicable their respective families. The certification number shall be used as the identifier of the test report.';

(19) in Article 18(1), the first subparagraph is amended as follows:

(a) the first indent is replaced by the following:

'— Appendix 3 to Annex V as regards the family concept of engines, taking into account the requirements of Article 15(2);';

(b) the following indent is added:

'— Appendix 13 to Annex Xb as regards the family concept of electric machine systems or integrated electric powertrain components, taking into account the requirements of Article 15(2).';

(20) Article 20 is amended as follows:

(a) paragraph 1, is amended as follows:

(1) the first subparagraph is replaced by the following:

'The vehicle manufacturer shall take the necessary measures to ensure that the processes set up for the purpose of obtaining the licence for the simulation tool for the application case covered by the licence granted pursuant to Article 7 continue to be adequate for that purpose.';

(2) in the second subparagraph, the first sentence is replaced by the following:

'For medium lorries and heavy lorries, with the exception of He-HDV or PEV, the vehicle manufacturer shall, perform the verification testing procedure set out in Annex Xa on a minimum number of vehicles in accordance with that Annex, point 3.';

(b) in paragraph 2, first subparagraph, the first sentence is replaced by the following:

'The approval authority shall perform, four times per year, an assessment as referred to in point 2 of Annex II in order to verify whether the processes set up by the manufacturer for the purposes of determining CO_2 emissions and fuel consumption for all the application cases and vehicle groups covered by the licence continue to be adequate.';

(21) Article 21 is amended as follows:

(a) paragraph 2 is replaced by the following:

'2. The plan of remedial measures shall apply to all application cases and vehicle groups which have been identified by the approval authority in its request.';

(b) paragraph 3 is amended as follows:

(1) the second subparagraph is replaced by the following:

'The approval authority may require the vehicle manufacturer to issue a new manufacturer's records file, vehicle information file, customer information file and certificate of conformity on the basis of a new determination of CO_2 emissions and fuel consumption reflecting the changes implemented in accordance with the approved plan of remedial measures.';

(2) the following subparagraphs are added:

'The vehicle manufacturer shall take the necessary measures to ensure that the processes set up for the purpose of obtaining the licence to operate the simulation tool for all the application cases and vehicle groups covered by the licence granted pursuant to Article 7 continue to be adequate for that purpose.

For medium lorries and heavy lorries the vehicle manufacturer shall, perform the verification testing procedure set out in Annex Xa on a minimum number of vehicles in accordance with that Annex, point 3.';

(22) Article 22 is amended as follows:

(a) the first subparagraph of paragraph 1 is replaced by the following:

'The manufacturer shall take the necessary measures in accordance with Annex IV to Regulation (EU) 2018/858 to ensure that the CO_2 emissions and fuel consumption related properties of the components, separate technical units and systems listed in Article 12(1) which have been the subject of certification in accordance with Article 17 do not deviate from the certified values.';

(b) in the second subparagraph of paragraph 1, the following indent is added:

'— the procedures laid down in points 1 to 4 of Appendix 12 to Annex Xb as regards electric powertrain components';

(c) paragraph 3 is replaced by the following:

'3. The manufacturer shall ensure that at least one in every 25 procedures referred to in the second subparagraph of paragraph 1, or, with an exception for tyres, at least one procedure per year, relating to a component, separate technical unit and system, or if applicable their respective families is supervised by a different approval authority than the one which participated in the certification of CO_2 emissions and fuel consumption related properties of the component, separate technical unit, system or if applicable their respective families concerned pursuant to Article 16.';

(23) Article 23 is amended as follows:

(a) paragraph 2 is replaced by the following:

'2. The plan of remedial measures shall apply to all the components, separate technical units and systems, or if applicable their respective families which have been identified by the approval authority in its request.';

(b) in paragraph 3, the second subparagraph is replaced by the following:

'The approval authority may require the vehicle manufacturer to issue a new manufacturer's records file, customer information file, vehicle information file and certificate of conformity on the basis of a new determination of CO_2 emissions and fuel consumption reflecting the changes implemented in accordance with the approved plan of remedial measures.';

(c) paragraph 5 is replaced by the following:

'5. The manufacturer shall keep a record of every component, separate technical unit or system recalled and repaired or modified and of the workshop which performed the repair or modification. The approval authority shall have access to such records on request during the implementation of the plan of the remedial measures and for a period of 5 years after the completion of its implementation.

The manufacturer shall store those records for 10 years.';

(d) paragraph 6 is replaced by the following:

'6. Where the plan of remedial measures has been rejected by the approval authority, or the approval authority establishes that the remedial measures are not being correctly applied, it shall take the necessary measures to ensure the conformity of CO_2 emissions and fuel consumption related properties of the component, separate technical unit and system, and if applicable their respective families concerned, or withdraw the certificate on CO_2 emissions and fuel consumption related properties.';

(24) Article 24 is amended as follows:

(a) paragraph 1 is amended as follows:

(1) the introductory wording is replaced by the following:

'Without prejudice to Article 10(3) of this Regulation, where the obligations referred to in Article 9 of this Regulation have not been complied with, Member States shall consider certificates of conformity for type approved vehicles to be no longer valid for the purposes of Article 48 of Regulation (EU) 2018/858, and, for type approved and individually approved vehicles, shall prohibit the registration, sale or entry into service of:';

(2) the following points (d), (e) and (f) are added:

'(d) vehicles in the groups 53 and 54, as defined in Table 2 of Annex I as from 1 July 2024;

(e) vehicles in the groups 31 to 40, as defined in Tables 4 to 6 of Annex I, as from 1 January 2025;

(f) vehicles in the group 1s as defined in Table 1 of Annex I, as from 1 July 2024.';

(b) paragraphs 2 and 3 are replaced by the following:

'2. The obligations referred to in Article 9 shall apply as follows:

(a) for vehicles in the groups 53 and 54, as defined in Table 2 of Annex I, with production date on or after 1 January 2024;

(b) for vehicles in the groups P31/32, P33/34, P35/36, P37/38 and P39/40 as defined in Table 3 of Annex I with production date on or after 1 January 2024;

(c) for heavy buses the simulation of the complete vehicle or completed vehicle as referred in point 2.1(b) of Annex I shall only be performed if the simulation of the primary vehicle as referred in point 2.1(a) of Annex I is available;

(d) for vehicles in the group 1s as defined in Table 1 of Annex I with production date on or after 1 January 2024;

(e) for vehicles in the groups 1, 2, 3, 4, 5, 9, 10, 4v, 5v, 9v, 10v, 11, 12, and 16, as defined in Table 1 of Annex I, other than those defined in points (f) and (g) of this paragraph, with production date on or after 1 January 2024;

(f) for vehicles in the groups 1, 2, 3, 4, 5, 9, 10, 4v, 5v, 9v, 10v, 11, 12, and 16, as defined in Table 1 of Annex I, which are equipped with a waste heat recovery system, as defined in point 2(8) of Annex V, provided that they are not ZE-HDVs, He-HDVs or dual-fuel vehicles;

(g) for dual-fuel vehicles in the groups 1, 2, 3, 4, 5, 9, 10, 4v, 5v, 9v, 10v, 11, 12, and 16 as defined in Table 1 of Annex I with production date on or after 1 January 2024; if they have a production date before 1 January 2024, the manufacturer may choose whether to apply Article 9.

For ZE-HDVs, He-HDVs and dual-fuel vehicles in the groups 1, 2, 3, 4, 5, 9, 10, 4v, 5v, 9v, 10v, 11, 12, and 16 as defined in Table 1 of Annex I in respect of which Article 9 has not been applied in conformity with points (a) to (g) of the first subparagraph of this paragraph, the vehicle manufacturer shall determine the input parameters specified for those vehicles in the models set out in Annex III, Table 5, using the latest available version of the simulation tool referred to in Article 5(3). In such case, the obligations referred to in Article 9 shall be deemed to be fulfilled for the purposes of paragraph 1 of this Article.

For the purposes of this paragraph, the production date shall mean the date of signature of the certificate of conformity and where no certificate of conformity has been issued, the date on which the vehicle identification number was affixed for the first time on the relevant parts of the vehicle.

3. Remedial measures under Articles 21(5) and 23(6) shall apply with regard to vehicles referred to in paragraph 1, points (a), (b) and (c), of this Article pursuant to an investigation into a vehicle failure in the verification testing procedure set out in Annex Xa as from 1 July 2023 and with regard to vehicles referred to in paragraph 2, points (d) and (g), of this Article as from 1 July 2024.';

(25) Annex I is replaced by the text in Annex I to this Regulation;

(26) Annex II is amended as set out in Annex II to this Regulation;

(27) Annex III is replaced by the text in Annex III to this Regulation;

(28) Annex IV is replaced by the text in Annex IV to this Regulation;

(29) Annex V is amended as set out in Annex V to this Regulation;

(30) Annex VI is amended as set out in Annex VI to this Regulation;

(31) Annex VII is amended as set out in Annex VII to this Regulation;

(32) Annex VIII is amended as set out in Annex VIII to this Regulation;

(33) Annex IX is replaced by the text in Annex IX to this Regulation;

(34) Annex X is amended as set out in Annex X to this Regulation;

(35) Annex Xa is replaced by the text in Annex XI to this Regulation;

(36) the text in Annex XII to this Regulation is inserted as Annex Xb.

Article 2

This Regulation shall enter into force on the twentieth day following that of its publication in the *Official Journal of the European Union*.

Article 3

This Regulation shall apply from 1 July 2022.

Notwithstanding the first paragraph of this Article, for the determination of CO_2 emissions and fuel consumption of vehicles in groups 1, 2, 3, 4, 5, 9, 10, 4v, 5v, 9v, 10v, 11, 12, and 16 defined in Annex I, Table 1, other than ZE-HDVs, He-HDVs, dual-fuel vehicles and vehicles, the engine of which has been certified with a waste heat recovery system, according to Article 9(1) of Regulation (EU) 2017/2400, this Regulation shall apply as of 1 January 2024.

Notwithstanding the first paragraph of this Article, Article 1, point (35), shall apply as of 1 January 2023.

This Regulation shall be binding in its entirety and directly applicable in all Member States.

Done at Brussels, 5 July 2022.

For the Commission

The President

Ursula VON DER LEYEN

ANNEX

LIST OF ANNEXES

ANNEX I	**Classification of vehicles in vehicle groups and method to determine CO_2 emissions and fuel consumption for heavy buses**
ANNEX II	**Requirements and procedures related to the operation of the simulation tool**
Appendix 1	Model of an information document for the purposes of operating the simulation tool with a view to determining the CO_2 emissions and fuel consumption of new vehicles
Appendix 2	Model of a licence to operate the simulation tool with a view to determining CO_2 emissions and fuel consumption of new vehicles
ANNEX III	**Input information relating to the characteristic of the vehicle**
Appendix 1	Vehicle technologies for which the obligations laid down in Article 9(1), first subparagraph, do not apply, as provided in that subparagraph
ANNEX IV	**Model of the output files of the simulation tool**
ANNEX V	**Verifying engine data**
Appendix 1	Model of a certificate of a component, separate technical unit or system
Appendix 2	Engine Information Document
Appendix 3	Engine CO_2-Family
Appendix 4	Conformity of CO_2 emissions and fuel consumption related properties
Appendix 5	Determination of power consumption of engine components
Appendix 6	Markings
Appendix 7	Input parameters for the simulation tool
Appendix 8	Important evaluation steps and equations of the engine pre-processing tool
ANNEX VI	**Verifying transmission, torque converter, other torque transferring component and additional driveline component data**
Appendix 1	Model of a certificate of a component, separate technical unit or system
Appendix 2	Transmission information document
Appendix 3	Hydrodynamic torque converter (TC) information document
Appendix 4	Other torque transferring components (OTTC) information document
Appendix 5	Additional driveline components (ADC) information document
Appendix 6	Family Concept
Appendix 7	Markings and numbering

Appendix 8 Standard torque loss values - Transmission

Appendix 9 Generic model – torque converter

Appendix 10 Standard torque loss values – other torque transferring components

Appendix 11 Standard torque loss values – geared angle drive or drivetrain component with a single speed ratio

Appendix 12 Input parameters for the simulation tool

ANNEX VII **Verifying axle data**

Appendix 1 Model of a certificate of a component, separate technical unit or system

Appendix 2 Axle information document

Appendix 3 Calculation of the standard torque loss

Appendix 4 Family Concept

Appendix 5 Markings and numbering

Appendix 6 Input parameters for the simulation tool

ANNEX VIII **Verifying air drag data**

Appendix 1 Model of a certificate of a component, separate technical unit or system

Appendix 2 Air drag information document

Appendix 3 Vehicle height requirements for rigid lorries and tractors

Appendix 4 Standard body and semitrailer configurations for rigid lorries and tractors

Appendix 5 Air drag family

Appendix 6 Conformity of the certified CO_2 emissions and fuel consumption related properties

Appendix 7 Standard values

Appendix 8 Markings

Appendix 9 Input parameters for the simulation tool

ANNEX IX **Verifying lorry and bus auxiliary data**

ANNEX X **Certification procedure for pneumatic tyres**

Appendix 1 Model of a certificate of a component, separate technical unit or system

Appendix 2 Tyre rolling resistance coefficient information document

Appendix 3 Input parameters for the simulation tool

Appendix 4 Numbering

ANNEX Xa **Conformity of simulation tool operation and of CO_2 emissions and fuel consumption related properties of components, separate technical units and systems: verification testing procedure**

Appendix 1 Main evaluation steps and equations as performed by the simulation tool in a verification testing procedure simulation

ANNEX Xb **Certification of electric powertrain components**

Appendix 1 Model of a certificate of a component, separate technical unit or system

Appendix 2 Information Document for an electric machine system

Appendix 3 Information Document for an IEPC

Appendix 4 Information Document for an IHPC Type 1

Appendix 5 Information Document for a battery system or a representative battery subsystem type

Appendix 6 Information Document for a capacitor system or a representative capacitor subsystem type

Appendix 7 -

Appendix 8 Standard values for electric machine system

Appendix 9 Standard values for IEPC

Appendix 10 Standard values for REESS

Appendix 11 -

Appendix 12 Conformity of the certified CO_2 emissions and fuel consumption related properties

Appendix 13 Family concept

Appendix 14 Markings and numbering

Appendix 15 Input parameters for the simulation tool

ANNEX XI **Amendments to Directive 2007/46/EC**

ANNEX I

CLASSIFICATION OF VEHICLES IN VEHICLE GROUPS AND METHOD TO DETERMINE CO_2 EMISSIONS AND FUEL CONSUMPTION FOR HEAVY BUSES

1. Classification of the vehicles for the purpose of this Regulation

1.1 Classification of vehicles of category N

Table 1

Vehicle groups for heavy lorries

Description of elements relevant to the classification in vehicle groups			Vehicle group	Allocation of mission profile and vehicle configuration						
Axle configuration	Chassis configuration	Technically permissible maximum laden mass (tons)		Long haul	Long haul EMS (*)	Regional delivery	Regional delivery EMS (*)	Urban delivery	Municipal utility	Construction
4 × 2	Rigid lorry (or tractor) (**)	> 7,4 – 7,5	1s			R		R		
	Rigid lorry (or tractor) (**)	> 7,5 – 10	1			R		R		
	Rigid lorry (or tractor) (**)	> 10 – 12	2	R + T1		R		R		
	Rigid lorry (or tractor) (**)	> 12 – 16	3			R		R		
	Rigid lorry	> 16	4	R + T2		R		R	R	
	Tractor	> 16	5	T + ST	T + ST + T2	T + ST	T + ST + T2	T + ST		
	Rigid lorry	> 16	4v (***)						R	R
	Tractor	> 16	5v (***)							T + ST

Description of elements relevant to the classification in vehicle groups			Vehicle group	Allocation of mission profile and vehicle configuration						
Axle configuration	Chassis configuration	Technically permissible maximum laden mass (tons)		Long haul	Long haul EMS (*)	Regional delivery	Regional delivery EMS (*)	Urban delivery	Municipal utility	Construction
4 × 4	Rigid lorry	> 7,5 – 16	(6)							
	Rigid lorry	> 16	(7)							
	Tractor	> 16	(8)							
6 × 2	Rigid lorry	all weights	9	R + T2	R + D + ST	R	R + D + ST		R	
	Tractor	all weights	10	T + ST	T + ST + T2	T + ST	T + ST + T2			
	Rigid lorry	all weights	9v (***)						R	R
	Tractor	all weights	10v (***)							T + ST
6 × 4	Rigid lorry	all weights	11	R + T2	R + D + ST	R	R + D + ST		R	R
	Tractor	all weights	12	T + ST	T + ST + T2	T + ST	T + ST + T2			T + ST

Description of elements relevant to the classification in vehicle groups			Vehicle group	Allocation of mission profile and vehicle configuration						
Axle configuration	Chassis configuration	Technically permissible maximum laden mass (tons)		Long haul	Long haul EMS (*)	Regional delivery	Regional delivery EMS (*)	Urban delivery	Municipal utility	Construction
6 × 6	Rigid lorry	all weights	(13)							
	Tractor	all weights	(14)							
8 × 2	Rigid lorry	all weights	(15)							
8 × 4	Rigid lorry	all weights	16							R
8 × 6 8 ×8	Rigid lorry	all weights	(17)							
8 × 2 8 × 4 8 × 6 8 × 8	Tractor	all weights	(18)							
5 axles, all configur-ations	Rigid lorry or tractor	all weights	(19)							

(*) EMS - European Modular System
(**) In these vehicle classes tractors are treated as rigid lorries but with specific curb weight of tractor
(***) Sub-group 'v' of vehicle groups 4, 5, 9 and 10: these mission profiles are exclusively applicable to vocational vehicles
T = Tractor
R = Rigid lorry & standard body
T1, T2 = Standard trailers
ST = Standard semitrailer
D = Standard dolly

Table 2

Vehicle groups for medium lorries

Description of elements relevant to the classification in vehicle groups			Allocation of mission profile and vehicle configuration						
Axle configuration	Chassis configuration	Vehicle group	Long haul	Long haul EMS (*)	Regional delivery	Regional delivery EMS (*)	Urban delivery	Municipal utility	Construction
FWD / 4 × 2F	Rigid Lorry (or tractor)	(51)							
	Van	(52)							
RWD / 4 × 2	Rigid Lorry (or tractor)	53			R		R		
	Van	54			I		I		
AWD / 4 × 4	Rigid Lorry (or tractor)	(55)							
	Van	(56)							

(*) EMS - European Modular System
R = Standard body
I = Van with its integrated body
FWD = Front wheel driven
RWD = Single driven axle which is not the front axle
AWD = More than a single driven axle

1.2. Classification of vehicles of category M

1.2.1. Heavy buses

1.2.2. Classification of primary vehicles

Table 3

Vehicle groups for primary vehicles

Description of elements relevant to the classification in vehicle groups		Vehicle group (1)	Allocation of generic body		Vehicle sub-group	Allocation of mission profile				
Number of axles	Artic-ulated		Low floor (LF) / High floor (HF) (2)	Number of decks (3)		Heavy Urban	Urban	Suburban	Interurban	Coach
2	no	P31/32	LF	SD	P31 SD	x	x	x	x	
				DD	P31 DD	x	x	x		
			HF	SD	P32 SD				x	x
				DD	P32 DD				x	x
3	no	P33/34	LF	SD	P33 SD	x	x	x	x	
				DD	P33 DD	x	x	x		
			HF	SD	P34 SD				x	x
				DD	P34 DD				x	x
	yes	P35/36	LF	SD	P35 SD	x	x	x	x	
				DD	P35 DD	x	x	x		
			HF	SD	P36 SD				x	x
				DD	P36 DD				x	x
4	no	P37/38	LF	SD	P37 SD	x	x	x	x	
				DD	P37 DD	x	x	x		
			HF	SD	P38 SD				x	x
				DD	P38 DD				x	x
	yes	P39/40	LF	SD	P39 SD	x	x	x	x	
				DD	P39 DD	x	x	x		
			HF	SD	P40 SD				x	x
				DD	P40 DD				x	x

(1) 'P' indicates the primary stage of the classification; the two numbers separated by the slash indicate the numbers for vehicle groups the vehicle can be allocated in the complete or completed stage.
(2) 'Low floor' means vehicle codes 'CE', 'CF', 'CG', 'CH', as set out in point 3 of part C of Annex I to Regulation (EU) 2018/858. 'High floor' means vehicle codes 'CA', 'CB', 'CC', 'CD', as set out in point 3 of part C of Annex I to Regulation (EU) 2018/858.
(3) 'SD' means single deck vehicle, 'DD' means double deck.

1.2.3. Classification of complete vehicles or completed vehicles

The classification of complete or completed vehicles that are heavy buses is based on the following six criteria:

(a) Number of axles;

(b) Vehicle code as set out in Annex I, part C, point 3, to Regulation (EU) 2018/858;

(c) Class of vehicle in accordance with paragraph 2 of UN Regulation No. 107 ([1]);

(d) Low entry vehicle ('yes/no' information derived from vehicle code and type of axle) to be determined according the decision flow shown in Figure 1;

(e) Number of passengers in lower deck from the Certificate of Conformity as set out in Annex VIII to Commission Implementing Regulation (EU) 2020/683 ([2]) or equivalent documents in the case of individual vehicle approval;

(f) Height of the integrated body to be determined in accordance with Annex VIII.

Figure 1

Decision flow to determine whether a vehicle is 'low entry' or not:

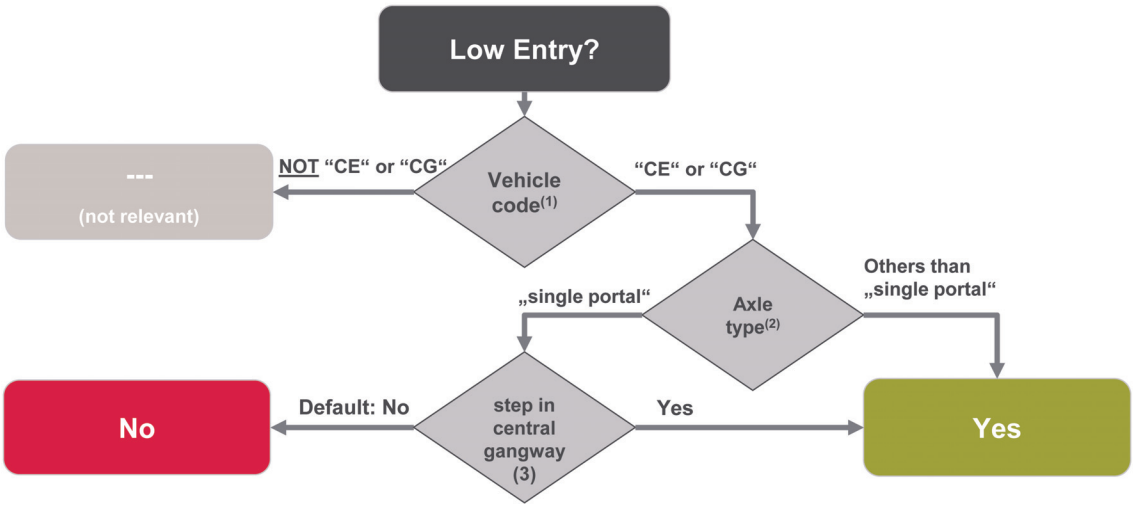

(1) Vehicle code as set out in point 3 of part C of Annex I to Regulation (EU) 2018/858 ("CE": Low Floor Single-Deck; "CG": Low Floor Single-Deck Articulated)

(2) Axle type according to point 2 of Annex VII of Regulation (EU) 2017/2400

(3) Low floor vehicle (according to point 3 of part C of Annex I to Regulation (EU) 2018/858) with at least one step (according to UN Regulation No 107, Annex 3, point 7.7.7 and Annex 4, Figure 8) in the central "gangway" (acc. to UN Regulation No 107, Definitions 2.15, 2.15.1, 2.15.2, 2.15.3 and Annex 4, Figure 25) in front of the (foremost) driven axle.

The corresponding classification to be used is given in Tables 4, 5 and 6.

Table 4

Vehicle groups for complete vehicles and completed vehicles that are heavy buses with 2 axles

Description of elements relevant to the classification in vehicle groups																			
Number of Axles	Chassis configuration (explanation only)			Vehicle Code (*)	Class of vehicle (**)					Low Entry (Vehicle Code CE or CG only)	Passenger seats in lower deck (Vehicle Code CB or CD only)	Height of the integrated body in [mm] (Vehicles Class 'II+III' only)	Vehicle group	Allocation of mission profile				
					I	I +II or A	II	II +III	III or B					Heavy Urban	Urban	Suburban	Interurban	Coach
2	rigid	LF	SD	CE	x	x	x			no	—	—	31a	x	x	x		
					x	x				yes	—	—	31b1	x	x	x		
							x			yes	—	—	31b2	x	x	x	x	
			DD	CF	x	x	x			—	—	—	31c	x	x	x		
		open top	SD	CI	x	x	x	x	x	—	—	—	31d	x	x	x		
			DD	CJ	x	x	x	x	x	—	—	—	31e	x	x	x		
		HF	SD	CA			x			—	—	—	32a				x	x
								x		—	—	≤ 3 100	32b				x	x
								x		—	—	> 3 100	32c				x	x
									x	—	—	—	32d				x	x
			DD	CB			x	x	x	—	≤ 6	—	32e				x	x
							x	x	x	—	> 6	—	32f				x	x

(*) In accordance with Regulation (EU) 2018/858.
(**) In accordance with paragraph 2 of UN Regulation No. 107.

Table 5

Vehicle groups for complete vehicles and completed vehicles that are heavy buses with 3 axles

Description of elements relevant to the classification in vehicle groups																		
Number of Axles	Chassis configuration (explanation only)			Vehicle Code (*)	Class of vehicle (**)					Low Entry (Vehicle Code CE or CG only)	Passenger seats in lower deck (Vehicle Code CB or CD only)	Height of the integrated body in [mm] (Vehicles Class 'II+III' only)	Vehicle group	Allocation of mission profile				
					I	I +II or A	II	II + III	III or B					Heavy Urban	Urban	Suburban	Interurban	Coach
3	rigid	LF	SD	CE	x	x	x			no	—	—	33a	x	x	x		
					x	x				yes	—	—	33b1	x	x	x		
							x			yes	—	—	33b2	x	x	x	x	
			DD	CF	x	x	x			—	—	—	33c	x	x	x		
		open top	SD	CI	x	x	x	x	x	—	—	—	33d	x	x	x		
			DD	CJ	x	x	x	x	x	—	—	—	33e	x	x	x		
		HF	SD	CA			x			—	—	—	34a				x	x
								x		—	—	≤ 3 100	34b				x	x
								x		—	—	> 3 100	34c				x	x
									x	—	—	—	34d				x	x
			DD	CB			x	x	x	—	≤ 6	—	34e				x	x
							x	x	x	—	> 6	—	34f				x	x
	articu-lated	LF	SD	CG	x	x	x			no	—	—	35a	x	x	x		
					x	x				yes	—	—	35b1	x	x	x		
							x			yes	—	—	35b2	x	x	x	x	
			DD	CH	x	x	x			—	—	—	35c	x	x	x		
		HF	SD	CC			x			—	—	—	36a				x	x
								x		—	—	≤ 3 100	36b				x	x
								x		—	—	> 3 100	36c				x	x
									x	—	—	—	36d				x	x
			DD	CD			x	x	x	—	≤ 6	—	36e				x	x
							x	x	x	—	> 6	—	36f				x	x

(*) In accordance with Regulation (EU) 2018/858.
(**) In accordance with paragraph 2 of UN Regulation No. 107.

Table 6

Vehicle groups for complete vehicles and completed vehicles that are heavy buses with 4 axles

Description of elements relevant to the classification in vehicle groups																		
Number of Axles	Chassis configuration (explanation only)			Vehicle Code (*)	Class of vehicle (**)					Low Entry (Vehicle Code CE or CG only)	Passenger seats in lower deck (Vehicle Code CB or CD only)	Height of the integrated body in [mm] (Vehicles Class 'II+III' only)	Vehicle group	Allocation of mission profile				
					I	I +II or A	II	II +III	III or B					Heavy Urban	Urban	Suburban	Interurban	Coach
4	rigid	LF	SD	CE	x	x	x			no	—	—	37a	x	x	x		
					x	x				yes	—	—	37b1	x	x	x		
							x			yes	—	—	37b2	x	x	x	x	
			DD	CF	x	x	x			—	—	—	37c	x	x	x		
		open top	SD	CI	x	x	x	x	x	—	—	—	37d	x	x	x		
			DD	CJ	x	x	x	x	x	—	—	—	37e	x	x	x		
		HF	SD	CA			x			—	—	—	38a				x	x
								x		—	—	≤ 3 100	38b				x	x
								x		—	—	> 3 100	38c				x	x
									x	—	—	—	38d				x	x
			DD	CB			x	x	x	—	≤ 6	—	38e				x	x
							x	x	x	—	> 6	—	38f				x	x
	articu-lated	LF	SD	CG	x	x	x			no	—	—	39a	x	x	x		
					x	x				yes	—	—	39b1	x	x	x		
							x			yes	—	—	39b2	x	x	x	x	
			DD	CH	x	x	x			—	—	—	39c	x	x	x		
		HF	SD	CC			x			—	—	—	40a				x	x
								x		—	—	≤ 3 100	40b				x	x
			SD					x		—	—	> 3 100	40c				x	x
									x	—	—	—	40d				x	x
			DD	CD			x	x	x	—	≤ 6	—	40e				x	x
							x	x	x	—	> 6	—	40f				x	x

(*) In accordance with Regulation (EU) 2018/858.
(**) In accordance with paragraph 2 of UN Regulation No. 107.

2. Method to determine CO_2 emissions and fuel consumption for heavy buses

2.1. For heavy buses the vehicle specifications of the complete vehicle or completed vehicle including properties of the final bodywork and auxiliary units shall be reflected in the results for CO_2 emissions and fuel consumption. In the case of heavy buses built in steps, more than a single manufacturer may be involved in the process of generation of input data and input information and the operation of the simulation tool. For heavy buses the CO_2 emissions and fuel consumption shall be based on the following two different simulations:

(a) for the primary vehicle;

(b) for the complete vehicle or completed vehicle.

2.2. If a heavy bus is approved by a manufacturer as a complete vehicle, the simulations shall be performed for both the primary vehicle and the complete vehicle.

2.3. For the primary vehicle the input to the simulation tool covers input data regarding the engine, transmission, tyres and input information for a subset of auxiliary units ([3]). The classification into vehicle groups is performed in accordance with Table 3 based on the number of axles and the information whether the vehicle is an articulated bus or not. In the simulations for the primary vehicle the simulation tool allocates a set of four different generic bodies (high floor and low floor, single deck and double deck bodywork) and simulates the 11 mission profiles as listed in Table 3 for each vehicle group for two different loading conditions. This leads to a set of 22 results for CO_2 emissions and fuel consumption for a primary heavy bus. The simulation tool produces the vehicle information file for the initial step (VIF_1), which contains all necessary data to be handed over to the subsequent manufacturing step. The VIF_1 comprises all non-confidential input data, the results for energy consumption ([4]) in [MJ/km], information on the primary manufacturer and the relevant hashes ([5]).

2.4. The manufacturer of the primary vehicle shall make the VIF_1 available to the manufacturer responsible for the subsequent manufacturing step. Where a manufacturer of a primary vehicle provides data going beyond the primary vehicle requirements as set out in Annex III, this data does not influence the simulation results for the primary vehicle but is written into the VIF_1 to be considered in later steps. For a primary vehicle the simulation tool furthermore produces a manufacturer's records file.

2.5. In the case of an interim vehicle, the interim manufacturer is responsible for a sub-set of relevant input data and input information for the final bodywork ([6]). An interim manufacturer does not apply for certification of the completed vehicle. An interim manufacturer shall add or update information relevant for the completed vehicle and operate the simulation tool to produce an updated and hashed version of the vehicle information file (VIF_i) ([7]). The VIF_i shall be made available to the manufacturer responsible for the subsequent manufacturing step. For interim vehicles the VIF_i also covers the task of documentation towards approval authorities. No simulations of CO_2 emissions and/or fuel consumption are performed on interim vehicles.

2.6. If a manufacturer performs modifications to an interim, complete or completed vehicle, which would require updates to the input data or the input information allocated to the primary vehicle (e.g. a change of an axle or of tyres), the manufacturer performing the modification acts as a primary vehicle manufacturer with the corresponding responsibilities.

2.7. For a complete or completed vehicle the manufacturer shall complement and, if necessary, update the input data and input information for the final bodywork as transmitted in the VIF_i from the previous manufacturing step and shall operate the simulation tool to calculate the CO_2 emissions and fuel consumption. For the simulations at this stage, heavy buses are classified based on the six criteria set out in point 1.2.3 into the vehicle groups as listed in Tables 4, 5 and 6. To determine CO_2 emissions and fuel consumption of complete vehicles or completed vehicles that are heavy buses the simulation tool performs the following calculation steps:

2.7.1. Step 1 - Selection of the primary vehicle sub-group which matches the bodywork of the complete or completed vehicle (e.g. 'P34 DD' for '34f') and making available the corresponding results for energy consumption from the primary vehicle simulation.

2.7.2. Step 2 - Performing simulations to quantify the influence of the bodywork and auxiliaries of the complete vehicle or completed vehicle compared to the generic bodywork and auxiliaries, as considered in the simulations for the primary vehicle regarding energy consumption. In these simulations, generic data are used for the set of primary vehicle data, which are not part of the information transfer between different manufacturing steps as provided by the VIF ([8]).

2.7.3. Step 3 - Combining energy consumption results from the primary vehicle simulation as made available by step 1 with the results from step 2 provides the energy consumption results of the complete or completed vehicle. The details of this calculation step are documented in the user manual of the simulation tool.

2.7.4. Step 4 - Results for CO_2 emissions and fuel consumption of the vehicle are calculated based on the results of step 3 and the generic fuel specifications as stored in the simulation tool. Steps 2, 3 and 4 are performed separately for each combination of mission profile as listed in the Tables 4, 5 and 6 for the vehicle groups in both low and representative loading condition.

2.7.5. For a complete vehicle or completed vehicle the simulation tool produces a manufacturer's records file, a customer information file as well as a VIF_i. The VIF_i shall be made available to the subsequent manufacturer in the event the vehicle undergoes a further step to be completed.

Figure 2 shows the data flow based on the example of a vehicle produced in five CO_2 related manufacturing steps.

Figure 2

Example of data flow in the case of a heavy bus manufactured in five steps

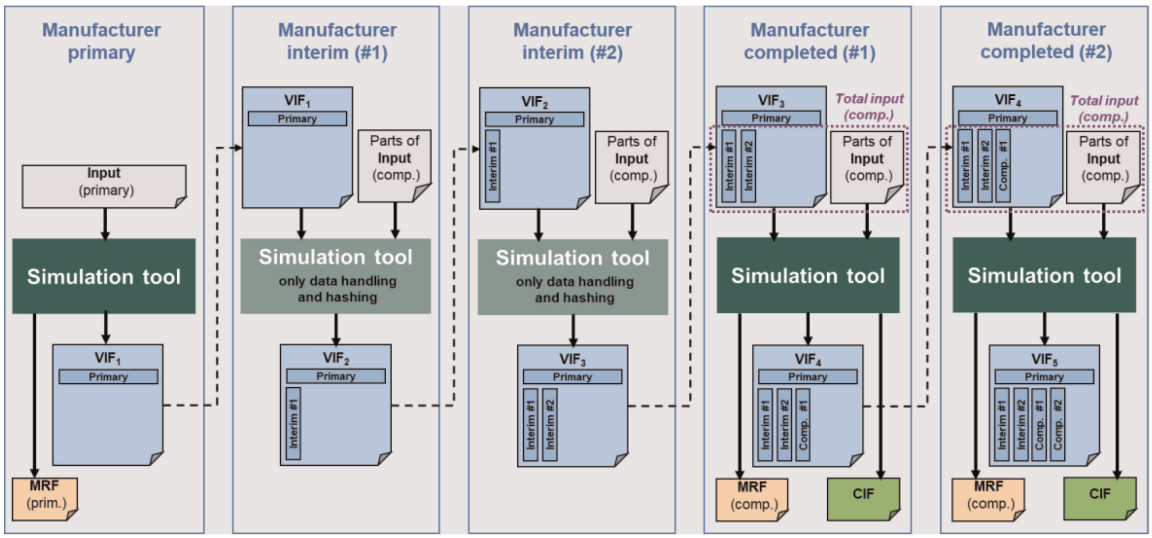

([1]) UN Regulation No. 107 of the Economic Commission for Europe of the United Nations (UNECE) – Uniform provisions concerning the approval of category M2 or M3 vehicles with regard to their general construction (OJ L 52, 23.2.2018, p. 1).

([2]) Commission Implementing Regulation (EU) 2020/683 of 15 April 2020 implementing Regulation (EU) 2018/858 of the European Parliament and of the Council with regards to the administrative requirements for the approval and market surveillance of motor vehicles and their trailers, and of systems, components and separate technical units intended for such vehicles (OJ L 163, 26.5.2020, p. 1).

([3]) Input information and input data as defined in Annex III for primary vehicles.

([4]) The results for CO_2 emissions and fuel consumption do not need to be submitted via the VIF, as this information can be calculated from results for energy consumption and the known fuel type.

([5]) The content of the VIF is specified in detail in Annex IV, Part III.

([6]) Subset for input information and input data as defined in Annex III for complete and completed vehicles.

([7]) 'i' represents the number of manufacturing steps involved in the process so far.

([8]) See Annex IV, Part III, point 1.1.

ANNEX II

Annex II is amended as follows:

(1) point 1.1.1, sub point (c) is replaced by the following:

'(c) verify by means of comparing cryptographic hashes that the input files of components, separate technical units, systems or if applicable their respective families, which are used for the simulation corresponds to the input data of the component, separate technical unit, system or if applicable their respective family for which the certification has been granted';

(2) point 2.1 is amended as follows:

(a) in the second paragraph, point (b) is replaced by the following:

'(b) that the processes used during the demonstration are applied in the same manner in all the production facilities manufacturing vehicles belonging to the application case concerned';

(b) the third paragraph is replaced by the following:

'For the purpose of the second paragraph, point (a), the verification shall include determination of the CO_2 emissions and fuel consumption of at least one vehicle from each production facility for which the licence has been applied for.';

(3) in Appendix 1, SECTION I is amended as follows:

(a) point 1 is replaced by the following:

'1. Name and address of vehicle manufacturer:';

(b) point 3 is replaced by the following:

'3. Application case covered:';

(4) in Appendix 2, SECTION I, points 0.1, 0.2 and 0.3 are replaced by the following:

'0.1 Name and address of vehicle manufacturer:

0.2 Production facilities and/or assembly plants for which the processes referred to in point 1 of Annex II to Commission Regulation (EU) 2017/2400 (*) have been set up with a view to the operation of the simulation tool

0.3 Application case covered:

(*) OJ L 349, 29.12.2017, p. 1.'

ANNEX III

'ANNEX III

INPUT INFORMATION RELATING TO THE CHARACTERISTIC OF THE VEHICLE

1. Introduction

This Annex describes the list of parameters to be provided by the vehicle manufacturer as input to the simulation tool. The applicable XML schema as well as example data are available at the dedicated electronic distribution platform.

2. Definitions

(1) "parameter ID": Unique identifier as used in the simulation tool for a specific input parameter or set of input data.

(2) "type": Data type of the parameter

string	sequence of characters in ISO8859-1 encoding
token	sequence of characters in ISO8859-1 encoding, no leading/trailing whitespace
date	date and time in UTC time in the format:YYYY-MM-DD*T*HH:MM:SS*Z* with italic letters denoting *fixed characters* e.g. "2002-05-30*T*09:30:10*Z*"
integer	value with an integral data type, no leading zeros, e.g. "1 800"
double, X	fractional number with exactly X digits after the decimal sign (".") and no leading zeros e.g. for "double, 2": "2 345,67"; for "double, 4": "45.6780".

(3) "unit" … physical unit of the parameter.

(4) "corrected actual mass of the vehicle" means the mass as specified under the "actual mass of the vehicle" in accordance with Commission Regulation (EU) No 1230/2012 (*) with an exception for the tank(s) which shall be filled to at least 50 % of its or their capacity/ies. The liquid containing systems are filled to 100 % of the capacity specified by the manufacturer, except the liquid containing systems for waste water that must remain empty.

For medium rigid lorries, heavy rigid lorries and tractors the mass is determined without superstructure and corrected by the additional weight of the non-installed standard equipment as specified in point 4.3. The mass of a standard body, standard semi-trailer or standard trailer to simulate the complete vehicle or complete vehicle-(semi-)trailer combination are added automatically by the simulation tool. All parts that are mounted on and above the main frame are regarded as superstructure parts if they are installed only for facilitating a superstructure, independent of the necessary parts for in running order conditions.

For heavy buses that are primary vehicles "corrected actual mass of the vehicle" is not applicable as the generic mass value is allocated by the simulation tool.

(5) "height of the integrated body" means the difference in "Z"-direction between the reference point "A" of the highest point and lowest point "B" of an integrated body (see Figure 1). For vehicles deviating from the standard case, the following cases are applicable (see Figure 2):

Special case 1, two levels: Height of the integrated body is the average of h1 and h2, where

— h1 is the difference between point A, but determined in the cross section of the vehicle at the rear end of first passenger door, and point B

— h2 is the difference between point A and point B

Special case 2, inclined: Height of the integrated body is the average of h1 and h2, where

— h1 is the difference between point A, but determined in the cross section of the vehicle at the rear end of first passenger door, and point B

— h2 is the difference between point A and point B

Special case 3, open top with roof section:

— Height of the integrated body determined in the remaining roof section

Special case 4, open top without any roof section:

— Height of the integrated body is the difference between the highest point of the vehicle within one meter in the longitudinal direction of the front screen or upper front screen, in the case of a double decker, and point B

For all other cases not covered by standard or special cases 1 to 4, the height of the integrated body is the difference between the highest point of the vehicle and point B. This parameter is relevant only for heavy buses.

Figure 1

Height of the integrated body – standard case

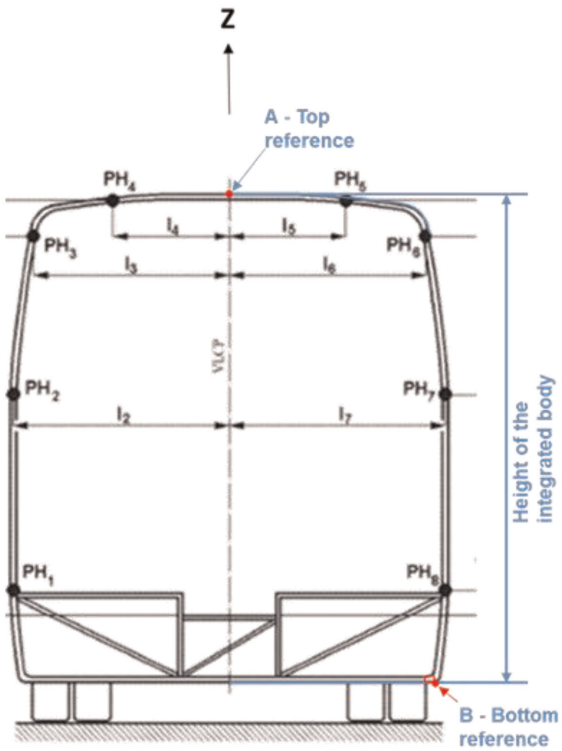

Figure 2

Height of the integrated body – special cases

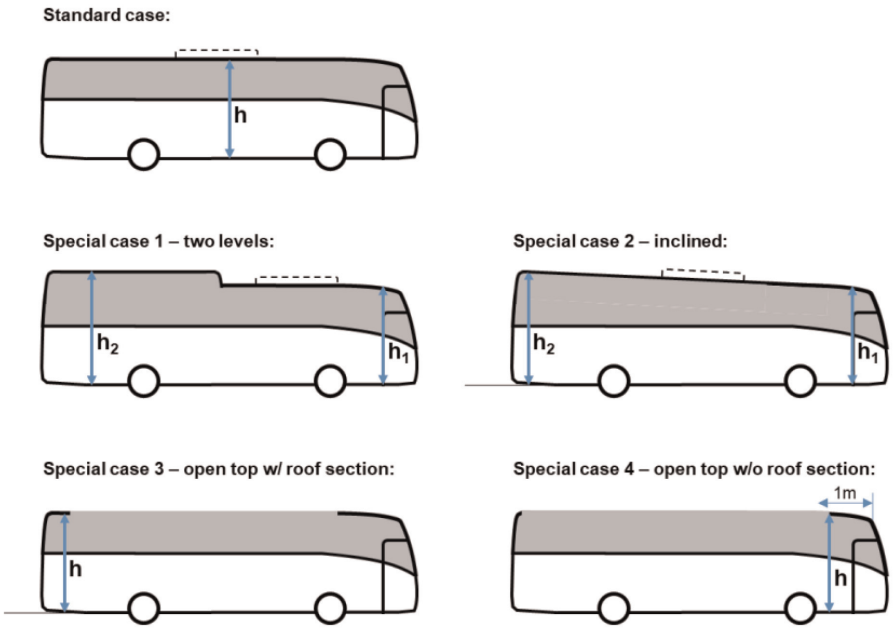

(6) reference point "A" means the highest point on the bodywork (Figure 1). Body and/or design panels, brackets for mounting e.g. HVAC systems, hatches and similar items shall not be considered.

(7) reference point "B" means the lowest point on the lower outside edge of the bodywork (Figure 1). Brackets e.g. for axle mounting shall not be considered.

(8) "vehicle length" means the vehicle dimension in accordance with Table I of Appendix 1 of Annex I to Regulation (EU) 1230/2012. Additionally, removable load carrier devices, non-removable coupling devices and any other non-removable exterior parts which do not affect the usable space for passengers shall not be taken into account. This parameter is relevant only for heavy buses.

(9) "vehicle width" means the vehicle dimension in accordance with Table II of Appendix 1 of Annex I to Regulation (EU) 1230/2012. Deviating from these provisions and not to be considered are removable load carrier devices, non-removable coupling devices and any other non-removable exterior parts which do not affect the usable space for passengers.

(10) "entrance height in non-kneeled position" means the floor level within the first door aperture above the ground, measured at the most forward door of the vehicle when the vehicle is in non-kneeled position.

(11) "fuel cell" means an energy converter transforming chemical energy (input) into electrical energy (output) or vice versa.

(12) "fuel cell vehicle" or "FCV" means a vehicle equipped with a powertrain containing exclusively fuel cell(s) and electric machine(s) as propulsion energy converter(s).

(13) "fuel cell hybrid vehicle" or "FCHV" means a fuel cell vehicle equipped with a powertrain containing at least one fuel storage system and at least one rechargeable electric energy storage system as propulsion energy storage systems.

(14) “pure ICE vehicle” means a vehicle where all of the propulsion energy converters are internal combustion engines.

(15) “electric machine” or “EM” means an energy converter transforming between electrical and mechanical energy.

(16) “energy storage system” means a system which stores energy and releases it in the same form as was input.

(17) “propulsion energy storage system” means an energy storage system of the powertrain which is not a peripheral device and whose output energy is used directly or indirectly for the purpose of vehicle propulsion.

(18) “category of propulsion energy storage system” means a fuel storage system, a rechargeable electric energy storage system (REESS), or a rechargeable mechanical energy storage system.

(19) “downstream” means a position in the vehicle’s powertrain that is closer to the wheels than the actual reference position.

(20) “drivetrain” means the connected elements of the powertrain for transmission of the mechanical energy between the propulsion energy converter(s) and the wheels.

(21) “energy converter” means a system where the form of energy output is different from the form of energy input.

(22) “propulsion energy converter” means an energy converter of the powertrain which is not a peripheral device whose output energy is used directly or indirectly for the purpose of vehicle propulsion.

(23) “category of propulsion energy converter” means an internal combustion engine, an electric machine, or a fuel cell.

(24) “form of energy” means electrical energy, mechanical energy, or chemical energy (including fuels).

(25) “fuel storage system” means a propulsion energy storage system that stores chemical energy as liquid or gaseous fuel.

(26) “hybrid vehicle” or “HV” means a vehicle equipped with a powertrain containing at least two different categories of propulsion energy converters and at least two different categories of propulsion energy storage systems.

(27) “hybrid electric vehicle” or “HEV” means a hybrid vehicle where one of the propulsion energy converters is an electric machine and the other one is an internal combustion engine.

(28) “serial HEV” means a HEV with a powertrain architecture where the ICE powers one or more electrical energy conversion paths with no mechanical connection between the ICE and the wheels of the vehicle.

(29) “internal combustion engine” or “ICE” means an energy converter with intermittent or continuous oxidation of combustible fuel transforming between chemical and mechanical energy.

(30) “off-vehicle charging hybrid electric vehicle” or “OVC-HEV” means a hybrid electric vehicle that can be charged from an external source.

(31) “parallel HEV” means a HEV with a powertrain architecture where the ICE powers only a single mechanically connected path between the engine and the wheels of the vehicle.

(32) “peripheral devices” means any energy consuming, converting, storing or supplying devices, where the energy is not directly or indirectly used for the purpose of vehicle propulsion but which are essential to the operation of the powertrain.

(33) "powertrain" means the total combination in a vehicle of propulsion energy storage system(s), propulsion energy converter(s) and the drivetrain(s) providing the mechanical energy at the wheels for the purpose of vehicle propulsion, plus peripheral devices.

(34) "pure electric vehicle" or "PEV" means a motor vehicle pursuant to Regulation (EU) 2018/858, article 3(16), equipped with a powertrain containing exclusively electric machines as propulsion energy converters and exclusively rechargeable electric energy storage systems as propulsion energy storage systems and/or alternatively any other means for direct conductive or inductive supply of electric energy from the power network providing the propulsion energy to the motor vehicle.

(35) "upstream" means a position in the vehicle's powertrain that is further away from the wheels than the actual reference position.

(36) "IEPC" means an integrated electric powertrain component in accordance with point 2(36) of Annex Xb.

(37) "IHPC Type 1" means an integrated hybrid electric vehicle powertrain component Type 1 in accordance with point 2(38) of Annex Xb.

3. Set of input parameters

In Tables 1 to 11 the sets of input parameters to be provided regarding the characteristics of the vehicle are specified. Different sets are defined depending on the application case (medium lorries, heavy lorries and heavy buses).

For heavy buses a differentiation is made between input parameters to be provided for the simulations at the primary vehicle and for the simulations at the complete vehicle or completed vehicle. The following provisions shall apply:

— Primary vehicle manufacturers shall provide all parameters listed in the primary vehicle column.

— Primary vehicle manufacturers may furthermore provide additional input parameters related to the complete or completed vehicle, which can be determined already at this initial stage. In this case information on Manufacturer (P235), Manufacturer Address (P252), VIN (P238) and Date (P239) shall be provided both for the set of primary input parameters and for the set of additional input parameters.

— Interim manufacturers shall provide input parameters related to the complete or completed vehicle which can be determined at this stage and which are under their responsibility. If a parameter which was already provided by a previous manufacturing stage is updated, the entire status of the parameter must be specified (example: if a second heat pump is added to the vehicle, the technology of both systems shall be provided). Information on Manufacturer (P235), Manufacturer Address (P252), VIN (P238) and Date (P239) and shall be provided by interim manufacturers in all cases;

— Manufactures of the completed vehicle shall provide input parameters which can be determined at this stage and which are under their responsibility. For necessary updates of parameters already provided by previous manufacturing stages, the same provisions as for interim manufacturers shall apply. Information on Manufacturer (P235), Manufacturer Address (P252), VIN (P238), Date (P239) and Corrected Actual Mass (P038) shall be provided in all cases. In order to be able to carry out the necessary simulations, the consolidated data set from all manufacturing stages must contain the entire information listed in the column for the complete vehicle or completed vehicle;

— Manufacturers related to the complete stage shall provide all input parameters. Information on Manufacturer (P235), Manufacturer Address (P252), VIN (P238) and Date (P239) shall be provided both for the primary input parameters and for the complete vehicle input parameters;

— The parameter "VehicleDeclarationType" (P293) shall be delivered by all manufacturing stages which provide any of the parameters as listed for the complete or completed vehicle.

Table 1

Input parameters "Vehicle/General"

Parameter name	Parameter ID	Type	Unit	Description/Reference	Heavy lorries	Medium lorries	Heavy buses (primary vehicle)	Heavy buses (complete or completed vehicle)
Manufacturer	P235	Token	[-]		X	X	X	X
Manufacturer Address	P252	Token	[-]		X	X	X	X
Model_CommercialName	P236	Token	[-]		X	X	X	X
VIN	P238	Token	[-]		X	X	X	X
Date	P239	Date Time	[-]	Date and time when input information and input data is created	X	X	X	X
Legislative Category	P251	String	[-]	Allowed values: "N2", "N3","M3"	X	X	X	X
ChassisConfiguration	P036	String	[-]	Allowed values: "Rigid Lorry", "Tractor", "Van", "Bus"	X	X	X	
AxleConfiguration	P037	String	[-]	Allowed values: "4 × 2", "4 × 2F", "6 × 2", "6 × 4", "8 × 2", "8 × 4"where "4 × 2F" refers to 4 × 2 vehicles with a driven front axle	X	X	X	
Articulated	P281	boolean		In accordance with Article 3, point (37)			X	
CorrectedActualMass	P038	Int	[kg]	In accordance with "Corrected actual mass of the vehicle" as specified in point 2(4)	X	X		X
TechnicalPermissibleMaximumLadenMass	P041	int	[kg]	In accordance with Article 2, point (7) of Regulation (EU) No 1230/2012	X	X	X	X
IdlingSpeed	P198	int	[1/min]	In accordance with point 7.1 For PEV no input is required.	X	X	X	

Parameter name	Parameter ID	Type	Unit	Description/Reference	Heavy lorries	Medium lorries	Heavy buses (primary vehicle)	Heavy buses (complete or completed vehicle)
RetarderType	P052	string	[-]	Allowed values: "None", "Losses included in Gearbox", "Engine Retarder", "Transmission Input Retarder", "Transmission Output Retarder", "Axlegear Input Retarder" "Axlegear Input Retarder" is applicable only for powertrain architectures "E3", "S3", "S-IEPC" and "E-IEPC"	X	X	X	
RetarderRatio	P053	double, 3	[-]	Step-up ratio in accordance with table 2 of Annex VI	X	X	X	
AngledriveType	P180	string	[-]	Allowed values: "None", "Losses included in Gearbox", "Separate Angledrive"	X	X	X	
PTOShafts GearWheels (1)	P247	string	[-]	Allowed values: "none", "only the drive shaft of the PTO", "drive shaft and/or up to 2 gear wheels", "drive shaft and/or more than 2 gear wheels", "only one engaged gearwheel above oil level" , "PTO which includes 1 or more additional gear-mesh(es), without disconnect clutch"	X			
PTOOther Elements (1)	P248	string	[-]	Allowed values: "none", "shift claw, synchroniser, sliding gearwheel", "multi-disc clutch", "multi-disc clutch, oil pump"	X			
CertificationNumberEngine	P261	token	[-]	Only applicable if the component is present in the vehicle	X	X	X	

Parameter name	Parameter ID	Type	Unit	Description/Reference	Heavy lorries	Medium lorries	Heavy buses (primary vehicle)	Heavy buses (complete or completed vehicle)
CertificationNumberGearbox	P262	token	[-]	Only applicable if the component is present in the vehicle and certified input data is provided	X	X	X	
CertificationNumberTorqueconverter	P263	token	[-]	Only applicable if the component is present in the vehicle and certified input data is provided	X	X	X	
CertificationNumberAxlegear	P264	token	[-]	Only applicable if the component is present in the vehicle and certified input data is provided	X	X	X	
CertificationNumberAngledrive	P265	token	[-]	Refers to certified ADC component installed in the angle drive position. Only applicable if the component is present in the vehicle and certified input data is provided	X	X	X	
CertificationNumberRetarder	P266	token	[-]	Only applicable if the component is present in the vehicle and certified input data is provided	X	X	X	
Certification NumberAirdrag	P268	token	[-]	Only applicable if certified input data is provided	X	X		X
AirdragModified-Multistage	P334	boolean	[-]	Input required for all manufacturing stages subsequent to a first entry to the air drag component. If parameter is set to "true" w/o providing a certified air drag component, the simulation tool applies standard values according to Annex VIII.				X
Certification NumberIEPC	P351	token	[-]	Only applicable if the component is present in the vehicle and certified input data is provided	X	X	X	

Parameter name	Parameter ID	Type	Unit	Description/Reference	Heavy lorries	Medium lorries	Heavy buses (primary vehicle)	Heavy buses (complete or completed vehicle)
ZeroEmission-Vehicle	P269	boolean	[-]	As defined in Article 3, point (15)	X	X	X	
VocationalVehicle	P270	boolean	[-]	In accordance with Article 3, point (9) of Regulation (EU) 2019/1242	X			
NgTankSystem	P275	string	[-]	Allowed values: "Compressed", "Liquefied" Only relevant for vehicles with engines of fuel type "NG PI" and "NG CI" (P193) Where both tank systems are present on a vehicle, the system which is able to contain the higher amount of fuel energy shall be declared as input to the simulation tool.	X	X		X
Sleepercab	P276	boolean	[-]		X			
ClassBus	P282	string	[-]	Allowed values: "I", "I+II", "A", "II", "II+III", "III", "B" in accordance with paragraph 2 of UN Regulation No. 107				X
NumberPassengers-SeatsLowerDeck	P283	int	[-]	Number of passenger seats - excluding driver and crew seats. In the case of a double deck vehicle, this parameter shall be used to declare the passenger seats from the lower deck. In the case of a single deck vehicle, this parameter shall be used to declare the number of total passenger seats.				X

Parameter name	Parameter ID	Type	Unit	Description/Reference	Heavy lorries	Medium lorries	Heavy buses (primary vehicle)	Heavy buses (complete or completed vehicle)
NumberPassengers-StandingLowerDeck	P354	int	[-]	Number of registered standing passengers In the case of a double deck vehicle, this parameter shall be used to declare the registered standing passengers from the lower deck. In the case of a single deck vehicle, this parameter shall be used to declare the total number of registered standing passengers.				X
NumberPassengers-SeatsUpperDeck	P284	int	[-]	Number of passenger seats - excluding driver and crew seats of the upper deck in a double deck vehicle. For single deck vehicles "0" shall be provided as input.				X
NumberPassengers-StandingUpperDeck	P355	int	[-]	Number of registered standing passengers of the upper deck in a double deck vehicle. For single deck vehicles "0" shall be provided as input.				X
BodyworkCode	P285	int	[-]	Allowed values: "CA", "CB", "CC", "CD", "CE", "CF", "CG", "CH", "CI", "CJ" in accordance with point 3 of part C of Annex I to Regulation (EU) 2018/585. In the case of bus chassis with vehicle code CX, no input shall be delivered.				X
LowEntry	P286	boolean	[-]	"low entry" in accordance with point 1.2.2.3 of Annex I				X
HeightIntegratedBody	P287	int	[mm]	in accordance with point 2(5)				X
VehicleLength	P288	int	[mm]	in accordance with point 2(8)				X

Parameter name	Parameter ID	Type	Unit	Description/Reference	Heavy lorries	Medium lorries	Heavy buses (primary vehicle)	Heavy buses (complete or completed vehicle)
VehicleWidth	P289	int	[mm]	in accordance with point 2(9)				X
EntranceHeight	P290	int	[mm]	in accordance with point 2(10)				X
DoorDriveTechnology	P291	string	[-]	Allowed values: "pneumatic", "electric", "mixed"				X
Cargo volume	P292	double, 3	[m^3]	Only relevant to vehicles of chassis configuration "van"		X		
VehicleDeclarationType	P293	string	[-]	Allowed values: "interim", "final"				X
VehicleTypeApprovalNumber	P352	token	[-]	Whole vehicle type approval number In the case of individual vehicle approvals, the individual vehicle approval number	X	X		X

(1) In the event multiple PTOs are mounted to the transmission, only the component with the highest losses according to point 3.6 of Annex IX, for its combination of criteria "PTOShaftsGearWheels" and "PTOShaftsOtherElements", shall be declared.

Table 2

Input parameters "Vehicle/AxleConfiguration" per wheel axle

Parameter name	Parameter ID	Type	Unit	Description/Reference	Heavy lorries	Medium lorries	Heavy buses (primary vehicle)	Heavy buses (complete or completed vehicle)
Twin Tyres	P045	boolean	[-]		X	X	X	
Axle Type	P154	String	[-]	Allowed values: "VehicleNonDriven", "VehicleDriven"	X	X	X	
Steered	P195	boolean		Only active steered axles shall be declared as "steered"	X	X	X	
Certification NumberTyre	P267	token	[-]		X	X	X	

Tables 3 and 3a provide the lists for input parameters regarding auxiliary units. The technical definitions for determining these parameters are given in Annex IX. The parameter ID is used to provide a clear reference between the parameters of Annexes III and IX.

Table 3

Input parameters "Vehicle/Auxiliaries" for medium lorries and heavy lorries

Parameter name	Parameter ID	Type	Unit	Description/Reference
EngineCoolingFan/Technology	P181	string	[-]	Allowed values: "Crankshaft mounted - Electronically controlled visco clutch", "Crankshaft mounted - Bimetallic controlled visco clutch", "Crankshaft mounted - Discrete step clutch", "Crankshaft mounted - On/off clutch", "Belt driven or driven via transmission - Electronically controlled visco clutch", "Belt driven or driven via transmission - Bimetallic controlled visco clutch", "Belt driven or driven via transmission - Discrete step clutch", "Belt driven or driven via transmission - On/off clutch", "Hydraulic driven - Variable displacement pump", "Hydraulic driven - Constant displacement pump", "Electrically driven - Electronically controlled"
SteeringPump/Technology	P182	string	[-]	Allowed values: "Fixed displacement", "Fixed displacement with elec. control", "Dual displacement", "Dual displacement with elec. control" "Variable displacement mech. controlled", "Variable displacement elec. controlled", "Electric driven pump", "Full electric steering gear" For PEV or HEV with a powertrain configuration "S" or "S-IEPC" in accordance with point 10.1.1 "Electric driven pump" or "Full electric steering gear" are the only allowed values. Separate entry for each active steered wheel axle required.
ElectricSystem/Technology	P183	string	[-]	Allowed values: "Standard technology", "Standard technology - LED headlights, all";
PneumaticSystem/Technology	P184	string	[-]	Allowed values: "Small", "Small + ESS", "Small + visco clutch", "Small + mech. clutch", "Small + ESS + AMS", "Small + visco clutch + AMS", "Small + mech. clutch + AMS", "Medium Supply 1-stage", "Medium Supply 1-stage + ESS", "Medium Supply 1-stage + visco clutch ", "Medium Supply 1-stage + mech. clutch", "Medium Supply 1-stage + ESS + AMS", "Medium Supply 1-stage + visco clutch + AMS", "Medium Supply 1-stage + mech. clutch + AMS", "Medium Supply 2-stage", "Medium Supply 2-stage + ESS", "Medium Supply 2-stage + visco clutch ", "Medium Supply 2-stage + mech. clutch", "Medium Supply 2-stage + ESS + AMS", "Medium Supply 2-stage + visco clutch + AMS", "Medium Supply 2-stage + mech. clutch + AMS", "Large Supply", "Large Supply + ESS", "Large Supply + visco clutch", "Large Supply + mech. clutch", "Large

Parameter name	Parameter ID	Type	Unit	Description/Reference
				Supply + ESS + AMS", "Large Supply + visco clutch + AMS", "Large Supply + mech. clutch + AMS", "Vacuum pump", "Small + elec. driven", "Small + ESS + elec. driven", "Medium Supply 1-stage + elec. driven", "Medium Supply 1-stage + AMS + elec. driven", "Medium Supply 2-stage + elec. driven", "Medium Supply 2-stage + AMS + elec. driven", "Large Supply + elec. driven", "Large Supply + AMS + elec. driven", "Vacuum pump + elec. driven"; For PEV only "elec. driven" technologies are allowed values.
HVAC/Technology	P185	string	[-]	Allowed values: "None", "Default"

Table 3a

Input parameters "Vehicle/Auxiliaries" for heavy buses

Parameter name	Parameter ID	Type	Unit	Description/Reference	Heavy buses (primary vehicle)	Heavy buses (complete or completed vehicle)
EngineCoolingFan/Technology	P181	string	[-]	Allowed values: "Crankshaft mounted - Electronically controlled visco clutch", "Crankshaft mounted - Bimetallic controlled visco clutch", "Crankshaft mounted - Discrete step clutch 2 stages", "Crankshaft mounted - Discrete step clutch 3 stages", "Crankshaft mounted - On/off clutch", "Belt driven or driven via transmission - Electronically controlled visco clutch", "Belt driven or driven via transmission - Bimetallic controlled visco clutch", "Belt driven or driven via transmission - Discrete step clutch 2 stages", "Belt driven or driven via transmission - Discrete step clutch 3 stages", "Belt driven or driven via transmission - On/off clutch", "Hydraulic driven - Variable displacement pump", "Hydraulic driven - Constant displacement pump", "Electrically driven - Electronically controlled"	X	
SteeringPump/Technology	P182	string	[-]	Allowed values: "Fixed displacement", "Fixed displacement with elec. control", "Dual displacement", "Dual displacement with elec. control", "Variable displacement mech. controlled", "Variable displacement elec. controlled", "Electric driven pump", "Full electric steering gear"	X	

Parameter name	Parameter ID	Type	Unit	Description/Reference	Heavy buses (primary vehicle)	Heavy buses (complete or completed vehicle)
				For PEV or HEV with a powertrain configuration "S" or "S-IEPC" in accordance with point 10.1.1 only "Electric driven pump" or "Full electric steering gear" are allowed values Separate entry for each active steered wheel axle required.		
ElectricSystem/AlternatorTechnology	P294	string	[-]	Allowed values: "conventional", "smart", "no alternator" Single entry per vehicle For pure ICE vehicles only "conventional" or "smart" are allowed values For HEV with a powertrain configuration "S" or "S-IEPC" in accordance with point 10.1.1 only "no alternator" or "conventional" are allowed values	X	
ElectricSystem/SmartAlternatorRatedCurrent	P295	integer	[A]	Separate entry per smart alternator	X	
ElectricSystem/SmartAlternatorRatedVoltage	P296	Integer	[V]	Allowed values: "12", "24", "48" Separate entry per smart alternator	X	
ElectricSystem/SmartAlternatorBatteryTechnology	P297	string	[-]	Allowed values: "lead-acid battery – conventional", "lead-acid battery – AGM", "lead-acid battery – gel", "li-ion battery - high power", "li-ion battery - high energy" Separate entry per battery charged by smart alternator system	X	
ElectricSystem/SmartAlternatorBatteryNominalVoltage	P298	Integer	[V]	Allowed values: "12", "24", "48" Where batteries are configured in series (e.g. two 12 V units for a 24 V system), the actual nominal voltage of the single battery units (12 V in this example) shall be provided. Separate entry per battery charged by smart alternator system	X	

Parameter name	Parameter ID	Type	Unit	Description/Reference	Heavy buses (primary vehicle)	Heavy buses (complete or completed vehicle)
ElectricSystem/SmartAlternatorBatteryRatedCapacity	P299	Integer	[Ah]	Separate entry per battery charged by smart alternator system	X	
ElectricSystem/SmartAlternatorCapacitorTechnology	P300	string	[-]	Allowed values: "with DCDC converter" Separate entry per capacitor charged by smart alternator system	X	
ElectricSystem/SmartAlternatorCapacitorRatedCapacitance	P301	integer	[F]	Separate entry per capacitor charged by smart alternator system	X	
ElectricSystem/SmartAlternatorCapacitorRatedVoltage	P302	Integer	[V]	Separate entry per capacitor charged by smart alternator system	X	
ElectricSystem/SupplyFromHEVPossible	P303	boolean	[-]		X	
ElectricSystem/InteriorlightsLED	P304	boolean	[-]			X
ElectricSystem/DayrunninglightsLED	P305	boolean	[-]			X
ElectricSystem/PositionlightsLED	P306	boolean	[-]			X
ElectricSystem/BrakelightsLED	P307	boolean	[-]			X
ElectricSystem/HeadlightsLED	P308	boolean	[-]			X
PneumaticSystem/SizeOfAirSupply	P309	string	[-]	Allowed values: "Small", "Medium Supply 1-stage", "Medium Supply 2-stage", "Large Supply 1-stage", "Large Supply 2-stage", "not applicable" For compressor drive *electrically* "not applicable" shall be provided. For PEV no input is required.	X	
PneumaticSystem/CompressorDrive	P310	string	[-]	Allowed values: "mechanically", "electrically" For PEV, only "electrically" is an allowed value.	X	
PneumaticSystem/Clutch	P311	string	[-]	Allowed values: "none", "visco", "mechanically" For PEV no input is required.	X	

Parameter name	Parameter ID	Type	Unit	Description/Reference	Heavy buses (primary vehicle)	Heavy buses (complete or completed vehicle)
PneumaticSystem/SmartRegenerationSystem	P312	boolean	[-]		X	
PneumaticSystem/SmartCompressionSystem	P313	boolean	[-]	For PEV or HEV with a powertrain configuration "S" or "S-IEPC" in accordance with point 10.1.1 no input is required.	X	
PneumaticSystem/Ratio Compressor ToEngine	P314	double, 3	[-]	For compressor drive *electrically* "0.000" shall be provided. For PEV no input is required.	X	
PneumaticSystem/Air suspension control	P315	string	[-]	Allowed values: "mechanically", "electronically"	X	
PneumaticSystem/SCRReagentDosing	P316	boolean	[-]		X	
HVAC/SystemConfiguration	P317	int	[-]	Allowed values: "0" to "10" In the case of an incomplete HVAC system, "0" shall be provided. "0" is not applicable for complete or completed vehicles.		X
HVAC/ HeatPumpTypeDriverCompartmentCooling	P318	string	[-]	Allowed values: "none", "not applicable", "R-744", "non R-744 2-stage", "non R-744 3-stage", "non R-744 4-stage", "non R-744 continuous" "not applicable" shall be declared for HVAC system configurations 6 and 10 due to supply from passenger heat pump		X
HVAC/ HeatPumpTypeDriverCompartmentHeating	P319	string	[-]	Allowed values: "none", "not applicable", "R-744", "non R-744 2-stage", "non R-744 3-stage", "non R-744 4-stage", "non R-744 continuous" "not applicable" shall be declared for HVAC system configurations 6 and 10 due to supply from passenger heat pump		X
HVAC/ HeatPumpTypePassengerCompartmentCooling	P320	string	[-]	Allowed values: "none", "R-744", "non R-744 2-stage", "non R-744 3-stage", non R-744 4-stage', "non R-744 continuous" In the case of multiple heat pumps with different technologies for cooling the passenger compartment, the dominant technology shall be declared (e.g. according to available power or preferred usage in operation).		X

Parameter name	Parameter ID	Type	Unit	Description/Reference	Heavy buses (primary vehicle)	Heavy buses (complete or completed vehicle)
HVAC/ HeatPumpTypePassengerCompartmentHeating	P321	string	[-]	Allowed values: “none”, “R-744”, “non R-744 2-stage”, “non R-744 3-stage”, non R-744 4-stage’, “non R-744 continuous” In the case of multiple heat pumps with different technologies for heating the passenger compartment, the dominant technology shall be declared (e.g. according to available power or preferred usage in operation).		X
HVAC/AuxiliaryHeaterPower	P322	integer	[W]	Enter “0” if no auxiliary heater is installed.		X
HVAC/Double glazing	P323	boolean	[-]			X
HVAC/AdjustableCoolant-Thermostat	P324	boolean	[-]		X	
HVAC/AdjustableAuxiliary-Heater	P325	boolean	[-]			X
HVAC/EngineWasteGasHeatExchanger	P326	boolean	[-]	For PEV no input is required.	X	
HVAC/SeparateAirDistribution-Ducts	P327	boolean	[-]			X
HVAC/WaterElectricHeater	P328	boolean	[-]	Input to be provided only for HEV and PEV		X
HVAC/AirElectricHeater	P329	boolean	[-]	Input to be provided only for HEV and PEV		X
HVAC/OtherHeating Technology	P330	boolean	[-]	Input to be provided only for HEV and PEV		X

Table 4

Input parameters "Vehicle/EngineTorqueLimits" per gear (optional)

Parameter name	Parameter ID	Type	Unit	Description/Reference	Heavy lorries	Medium lorries	Heavy buses (primary vehicle)	Heavy buses (complete or completed vehicle)
Gear	P196	integer	[-]	only gear numbers need to be specified where vehicle related engine torque limits according to point 6 are applicable	X	X	X	
MaxTorque	P197	integer	[Nm]		X	X	X	

Table 5

Input parameters for vehicles exempted according to Article 9

Parameter name	Parameter ID	Type	Unit	Description/Reference	Heavy lorries	Medium lorries	Heavy buses (primary vehicle)	Heavy buses (complete and completed vehicle)
Manufacturer	P235	token	[-]		X	X	X	X
ManufacturerAddress	P252	token	[-]		X	X	X	X
Model_Commercial-Name	P236	token	[-]		X	X	X	X
VIN	P238	token	[-]		X	X	X	X
Date	P239	date Time	[-]	Date and time when input information and input data is created	X	X	X	X
LegislativeCategory	P251	string	[-]	Allowed values: "N2", "N3", "M3"	X	X	X	X
ChassisConfiguration	P036	string	[-]	Allowed values: "Rigid Lorry", "Tractor", "Van", "Bus"	X	X	X	
AxleConfiguration	P037	string	[-]	Allowed values: "4 × 2", "4 × 2F", "6 × 2", "6 × 4", "8 × 2", "8 × 4" where "4 × 2F" refers to 4 × 2 vehicles with a driven front axle	X	X	X	

Parameter name	Parameter ID	Type	Unit	Description/Reference	Heavy lorries	Medium lorries	Heavy buses (primary vehicle)	Heavy buses (complete and completed vehicle)
Articulated	P281	boolean		in accordance with the definition set out in Annex I to this Regulation.			X	
CorrectedActualMass	P038	int	[kg]	In accordance with "Corrected actual mass of the vehicle" as specified in section 2 point (4)	X	X		X
TechnicalPermissible-MaximumLadenMass	P041	int	[kg]	In accordance with Article 2, point (7), of Regulation (EU) No 1230/2012	X	X	X	X
ZeroEmissionVehicle	P269	boolean	[-]	As defined in Article 3, point (15)	X	X	X	
Sleepercab	P276	boolean	[-]		X			
ClassBus	P282	string	[-]	Allowed values: "I", "I+II", "A", "II", "II+III", "III", "B" in accordance with paragraph 2 of UN Regulation No. 107				X
NumberPassengersSeats-LowerDeck	P283	int	[-]	Number of passenger seats - excluding driver and crew seats. In the case of a double deck vehicle, this parameter shall be used to declare the passenger seats from the lower deck. In the case of a single deck vehicle, this parameter shall be used to declare the number of total passenger seats.				X

Parameter name	Parameter ID	Type	Unit	Description/Reference	Heavy lorries	Medium lorries	Heavy buses (primary vehicle)	Heavy buses (complete and completed vehicle)
NumberPassengersStandingLowerDeck	P354	int	[-]	Number of registered standing passengers In the case of a double deck vehicle, this parameter shall be used to declare the registered standing passengers from the lower deck. In the case of a single deck vehicle, this parameter shall be used to declare the total number of registered standing passengers.				X
NumberPassengersSeatsUpperDeck	P284	int	[-]	Number of passenger seats - excluding driver and crew seats of the upper deck in a double deck vehicle. For single deck vehicles "0" shall be provided as input.				X
NumberPassengersStandingUpperDeck	P355	int	[-]	Number of registered standing passengers of the upper deck in a double deck vehicle. For single deck vehicles "0" shall be provided as input.				X
BodyworkCode	P285	int	[-]	Allowed values: "CA", "CB", "CC", "CD", "CE", "CF", "CG", "CH", "CI", "CJ" in accordance with point 3 of part C of Annex I to Regulation (EU) 2018/585				X
LowEntry	P286	boolean	[-]	"low entry" in accordance with point 1.2.2.3 of Annex I				X
HeightIntegratedBody	P287	int	[mm]	in accordance with point 2(5)				X

Parameter name	Parameter ID	Type	Unit	Description/Reference	Heavy lorries	Medium lorries	Heavy buses (primary vehicle)	Heavy buses (complete and completed vehicle)
SumNetPower	P331	int	[W]	Maximum possible sum of positive propulsion power of all energy converters, which are linked to the vehicle drivetrain or the wheels	X	X	X	
Technology	P332	string	[-]	In accordance with Table 1 of Appendix 1. Allowed values: "Dual-fuel vehicle Article 9 exempted", "In-motion charging Article 9 exempted", "Multiple powertrains Article 9 exempted", "FCV Article 9 exempted", "H2 ICE Article 9 exempted", "HEV Article 9 exempted", "PEV Article 9 exempted", "HV Article 9 exempted"	X	X	X	

Table 6

Input parameters "Advanced driver assistance systems"

Parameter name	Parameter ID	Type	Unit	Description/Reference	Heavy lorries	Medium lorries	Heavy buses (primary vehicle)	Heavy buses (complete and completed vehicle)
EngineStopStart	P271	boolean	[-]	In accordance with point 8.1.1 Input only to be provided for pure ICE vehicles and HEV.	X	X	X	X
EcoRollWithoutEngineStop	P272	boolean	[-]	In accordance with point 8.1.2 Input only to be provided for pure ICE vehicles.	X	X	X	X

Parameter name	Parameter ID	Type	Unit	Description/Reference	Heavy lorries	Medium lorries	Heavy buses (primary vehicle)	Heavy buses (complete and completed vehicle)
EcoRollWithEngineStop	P273	boolean	[-]	In accordance with point 8.1.3 Input only to be provided for pure ICE vehicles.	X	X	X	X
PredictiveCruiseControl	P274	string	[-]	In accordance with point 8.1.4, allowed values: “1,2”, “1,2,3”	X	X	X	X
APTEcoRollReleaseLock-upClutch	P333	boolean	[-]	Only relevant in the case of APT-S and APT-P transmissions in combination with any Eco-roll function. Set to “true” if functionality (2) as defined in point 8.1.2 is the predominant Eco-roll mode. Input only to be provided for pure ICE vehicles.	X	X	X	X

Table 7

General input parameters for HEV and PEV

Parameter name	Parameter ID	Type	Unit	Description/Reference	Heavy lorries	Medium lorries	Heavy buses (primary vehicle)	Heavy buses (complete or completed vehicle)
ArchitectureID	P400	string	[-]	In accordance with point 10.1.3, the following values are allowed inputs: “E2”, “E3”, “E4”, “E-IEPC”, “P1”, “P2”, “P2.5”, “P3”, “P4”, “S2”, “S3”, “S4”, “S-IEPC”	X	X	X	
OvcHev	P401	boolean	[-]	In accordance with point 2(31)	X	X	X	

Parameter name	Parameter ID	Type	Unit	Description/Reference	Heavy lorries	Medium lorries	Heavy buses (primary vehicle)	Heavy buses (complete or completed vehicle)
MaxChargingPower	P402	Integer	[W]	The maximum charging power allowed by the vehicle for off-vehicle charging shall be declared as input to the simulation tool. Only relevant where parameter "OvcHev" is set to "true".	X	X	X	

Table 8

Input parameters per electric machine position

(Only applicable if the component is present in the vehicle)

Parameter name	Parameter ID	Type	Unit	Description/Reference
PowertrainPosition	P403	string	[-]	Position of the EM in the vehicle's powertrain according to points 10.1.2 and 10.1.3. Allowed values: "1", "2", "2.5", "3", "4", "GEN". Only one EM position per powertrain allowed, except for architecture "S". Architecture "S" requires EM position "GEN" and additionally one other EM position being "2", "3" or "4". Position "1" is not allowed for architectures "S" and "E" Position "GEN" is only allowed for architecture "S"
Count	P404	integer	[-]	Number of identical electric machines at the specified EM position. In the case of parameter "PowertrainPosition" being "4", the count shall be multiples of 2 (e.g. 2, 4, 6).
CertificationNumberEM	P405	token	[-]	
CertificationNumberADC	P406	token	[-]	Optional input in the case of additional single-step gear ratio (ADC) between EM shaft and connection point to vehicle's powertrain according to point 10.1.2 Not allowed where parameter "IHPCType" is set to "IHPC Type 1".

Parameter name	Parameter ID	Type	Unit	Description/Reference
P2.5GearRatios	P407	double, 3	[-]	Only applicable in the case that the parameter "PowertrainPosition" is set to "P2.5" Declared for each forward gear of the transmission. Declared value for gear ratio defined by either "n_{GBX_in} / n_{EM}" in the case of EM without additional ADC or "n_{GBX_in} / n_{ADC}" in the case of EM with additional ADC. n_{GBX_in} = rotational speed at transmission input shaft n_{EM} = rotational speed at EM output shaft n_{ADC} = rotational speed at ADC output shaft

Table 9

Torque limitations per electric machine position (optional)

Declaration of separate dataset for each voltage level measured under "CertificationNumberEM". Declaration not allowed where parameter "IHPCType" is set to "IHPC Type 1".

Parameter name	Parameter ID	Type	Unit	Description/Reference
OutputShaftSpeed	P408	double, 2	[1/min]	Exact same entries for rotational speed to be declared as under "CertificationNumberEM" for parameter number "P468" of Appendix 15 of Annex Xb.
MaxTorque	P409	double, 2	[Nm]	Maximum torque of the EM (referring to the output shaft) as function of rotational speed points declared under parameter number "P469" of Appendix 15 of Annex Xb. Each value of maximum torque declared shall either be lower than 0,9 times the original value at the respective rotational speed or match exactly the original value at the respective rotational speed. The values of maximum torque declared shall not be lower than zero. Where the parameter "Count" (P404) is larger than one, the maximum torque shall be declared for a single EM (as present in the component test for the EM under "Certification-NumberEM").
MinTorque	P410	double, 2	[Nm]	Minimum torque of the EM (referring to the output shaft) as function of rotational speed points declared under parameter number "P470" of Appendix 15 of Annex Xb. Each value of minimum torque declared shall either be higher than 0.9 times the original value at the respective rotational speed or match exactly the original value at the respective rotational speed.

Parameter name	Parameter ID	Type	Unit	Description/Reference
				The values of minimum torque declared shall not be higher than zero. Where the parameter "Count" (P404) is larger than one, the minimum torque shall be declared for a single EM (as present in the component test for the EM under "Certification-NumberEM").

Table 10

Input parameters per REESS

(Only applicable if the component is present in the vehicle)

Parameter name	Parameter ID	Type	Unit	Description/Reference
StringID	P411	integer	[-]	The arrangement of representative battery sub-systems in accordance with Annex Xb on vehicle level shall be declared by allocation of each battery sub-system to a specific string defined by this parameter. All specific strings are connected in parallel, all battery sub-system located in one specific parallel string are connected in series. Allowed values: "1", "2", "3", …
CertificationNumberREESS	P412	token	[-]	
SOCmin	P413	integer	[%]	Optional input. Only relevant in the case of REESS type "battery". Parameter only effective in simulation tool where input is higher than generic value as documented in the user manual.
SOCmax	P414	integer	[%]	Optional input Only relevant in the case of REESS type "battery". Parameter only effective in simulation tool where input is lower than generic value as documented in the user manual.

Table 11

Boosting limitations for parallel HEV (optional)

Only allowed where powertrain configuration in accordance with point 10.1.1 is "P" or "IHPC Type 1".

Parameter name	Parameter ID	Type	Unit	Description/Reference
RotationalSpeed	P415	double, 2	[1/min]	Referring to transmission input shaft speed
BoostingTorque	P416	double, 2	[Nm]	In accordance with point 10.2

4. Vehicle mass for medium rigid lorries and tractors, heavy rigid lorries and tractors

4.1 The vehicle mass used as input for the simulation tool shall be the corrected actual mass of the vehicle.

4.2 If not all the standard equipment is installed, the manufacturer shall add the mass of the following construction elements to the corrected actual mass of the vehicle:

(a) Front underrun protection in accordance with Regulation (EU) 2019/2144 (**) of the European Parliament and of the Council

(b) Rear underrun protection in accordance with Regulation (EU) 2019/2144

(c) Lateral protection in accordance with Regulation (EU) 2019/2144

(d) Fifth wheel in accordance with Regulation (EU) 2019/2144

4.3 The mass of the construction elements referred to in point 4.2 shall be the following:

For vehicles of groups 1s, 1, 2 and 3 as set out in Annex I, Table 1, and for vehicle groups 51 and 53 as set out in Annex I, Table 2.

(a) Front underride protection 45 kg

(b) Rear underride protection 40 kg

(c) Lateral protection 8,5 kg/m × wheel base [m] − 2,5 kg

For vehicles of groups 4, 5, 9 to 12 and 16 as set out in Annex I, Table 1.

(a) Front under-ride protection 50 kg

(b) Rear under-ride protection 45 kg

(c) Lateral protection 14 kg/m × wheel base [m] − 17 kg

(d) Fifth wheel 210 kg

5. Hydraulically and mechanically driven axles

In the case of vehicles equipped with:

(a) a hydraulically driven axles, the axle shall be treated as a non-drivable one and the manufacturer shall not take it into consideration for establishing an axle configuration of a vehicle;

(b) a mechanically driven axles, the axle shall be treated as a drivable one and the manufacturer shall take it into consideration for establishing an axle configuration of a vehicle;

6. Gear dependent engine torque limits and gear disabling

6.1. Gear dependent engine torque limits

For the highest 50 % of the gears (e.g. for gears 7 to 12 of a 12-gear transmission) the vehicle manufacturer may declare a gear dependent maximum engine torque limit which is not higher than 95 % of the maximum engine torque.

6.2 Gear disabling

For the highest 2 gears (e.g. gear 5 and 6 for a 6-gear transmission) the vehicle manufacturer may declare a complete disabling of gears by providing 0 Nm as gear specific torque limit in the input to the simulation tool.

6.3 Verification requirements

Gear dependent engine torque limits in accordance with point 6.1 and gear disabling in accordance with point 6.2 are subject to verification in the verification testing procedure (VTP) as laid out in Annex Xa, point 6.1.1.1 c).

7. Vehicle specific engine idling speed

7.1. The engine idling speed has to be declared for each individual vehicle with an ICE. This declared vehicle engine idling shall be equal or higher than specified in the engine input data approval.

8. Advanced driver assistance systems

8.1 The following types of advanced driver assistance systems, which are primarily aiming for reduction of fuel consumption and CO_2 emissions, shall be declared in the input to the simulation tool:

8.1.1 Engine stop-start during vehicle stops: system which automatically shuts down and restarts the internal combustion engine during vehicle stops to reduce engine idling time. For automatic engine shut down the maximum time delay after the vehicle stop shall be not longer than 3 seconds.

8.1.2 Eco-roll without engine stop-start: system which automatically decouples the internal combustion engine from the drivetrain during specific downhill driving conditions with low negative gradients. The system shall be active at least at all cruise control set speeds above 60 km/h. Any system to be declared in the input information to the simulation tool shall cover either one or both of the following functionalities:

Functionality (1)'

The combustion engine is de-coupled from the drivetrain, and engine operates at idle speed. In the case of APT-transmissions, the torque converter lock-up clutch is closed.

Functionality (2) Torque converter lock-up clutch open

The torque converter lock-up clutch is open during Eco-roll mode. This allows the engine to operate in coast mode at lower engine speeds and reduces or even eliminates fuel injection. Functionality (2) is relevant only for APT-transmissions.

8.1.3 Eco-roll with engine stop-start: system which automatically decouples the internal combustion engine from the drivetrain during specific downhill driving conditions with low negative slopes. During these phases the internal combustion engine is shut down after a short time delay and keeps shut down during the main share of the eco-roll phase. The system shall be active at least at all cruise control set speeds of above 60 km/h.

8.1.4 Predictive cruise control (PCC): systems which optimise the usage of potential energy during a driving cycle based on an available preview of road gradient data and the use of a GPS system. A PCC system declared in the input to the simulation tool shall have a gradient preview distance longer than 1 000 meters and cover all following functionalities:

(1) Crest coasting

Approaching a crest the vehicle velocity is reduced before the point where the vehicle starts accelerating by gravity alone compared to the set speed of the cruise control so that the braking during the following downhill phase can be reduced.

(2) Acceleration without engine power

During downhill driving with a low vehicle velocity and a high negative slope the vehicle acceleration is performed without any engine power usage so that the downhill braking can be reduced.

(3) Dip coasting

During downhill driving when the vehicle is braking at the overspeed velocity, PCC increases the overspeed for a short period of time to end the downhill event with a higher vehicle velocity. Overspeed is a higher vehicle speed than the set speed of the cruise control system.

A PCC system can be declared as input to the simulation tool if either the functionalities set out in points (1) and (2) or points (1), (2) and (3) are covered.

8.2 The eleven combinations of the advanced driver assistance systems as set out in Table 12 are input parameters into the simulation tool. Combinations 2 to 11 shall not be declared for SMT transmissions. Combinations No 3, 6, 9 and 11 shall not be declared in the case of APT transmissions.

Table 12

Combinations of advanced driver assistance systems as input parameters into the simulation tool

Combination no	Engine stop-start during vehicle stops	Eco-roll without engine stop-start	Eco-roll with engine stop-start	Predictive cruise control
1	yes	no	no	no
2	no	yes	no	no
3	no	no	yes	no
4	no	no	no	yes
5	yes	yes	no	no
6	yes	no	yes	no
7	yes	no	no	yes
8	no	yes	no	yes
9	no	no	yes	yes
10	yes	yes	no	yes
11	yes	no	yes	yes

8.3 Any advanced driver assistance system declared in the input into the simulation tool shall by default be set to fuel economy mode after each key-off/key-on cycle.

8.4 If an advanced driver assistance system is declared in the input into the simulation tool, it shall be possible to verify the presence of such a system based on real world driving and the system definitions as set out in point 8.1. If a certain combination of systems is declared, also the interaction of functionalities (e.g. predictive cruise control plus eco-roll with engine stop-start) shall be demonstrated. In the verification procedure it shall be taken into consideration, that the systems need certain boundary conditions to be “active” (e.g. engine at operation temperature for engine stop-start, certain vehicle speed ranges for PCC, certain ratios of road gradients with vehicle mass for eco-roll). The vehicle manufacturer needs to submit a functional description of boundary conditions when the systems are “inactive” or their efficiency is reduced. The approval authority may request the technical justifications of these boundary conditions from the applicant for approval and assess them for compliance.

9. Cargo volume

9.1. For vehicles of chassis configuration “van” the cargo volume shall be calculated by the following equation:

$$Cargo\ volume = \frac{(L_{C,floor} + L_C)}{2} \cdot \frac{(W_{C,max} + W_{C,wheelhouse})}{2} \cdot \frac{(H_{C,max} + H_{C,rearwheel})}{2} [m^3]$$

where the dimensions shall be determined in accordance with Table 13 and Figure 3.

Table 13

Definitions related to cargo volume for medium lorries of type van

Formula symbol	Dimension	Definition
$L_{C,floor}$	Cargo length at floor	— longitudinal distance from the most rearward point of the last seating row or the partition wall to the foremost point of the closed rear compartment projected to the zero Y-plane — measured at the height of the cargo floor surface
L_C	Cargo length	— longitudinal distance from the X-plane tangent to the most rearward point on the seatback including head restraints of the last seating row or the partition wall to the foremost X-plane tangent to the closed rear compartment i.e. the tailgate or rear doors or any other limiting surface — measured at the height of the most rearward point of the last seating row or the partition wall
$W_{C,max}$	Maximum cargo width	— maximum lateral distance of the cargo compartment — measured between the cargo floor and 70 mm above the floor — measurement excludes the transitional arc, local protrusions, depressions or pockets if present
$W_{C,wheelhouse}$	Cargo width at wheelhouse	— minimum lateral distance between the limiting interferences (pass-through) of the wheelhouses — measured between the cargo floor and 70 mm above the floor — measurement excludes the transitional arc, local protrusions, depressions or pockets if present
$H_{C,max}$	Maximum cargo height	— Maximum vertical distance from the cargo floor to the headlining or other limiting surface — Measured behind the last seating row or partition wall at the vehicle centreline
$H_{C,rearwheel}$	Cargo height at rear wheel	— vertical distance from the top of the cargo floor to the headlining or the limiting surface — measured at the rear wheel X coordinate at the vehicle centreline

Figure 3

Definition of cargo volume for medium lorries

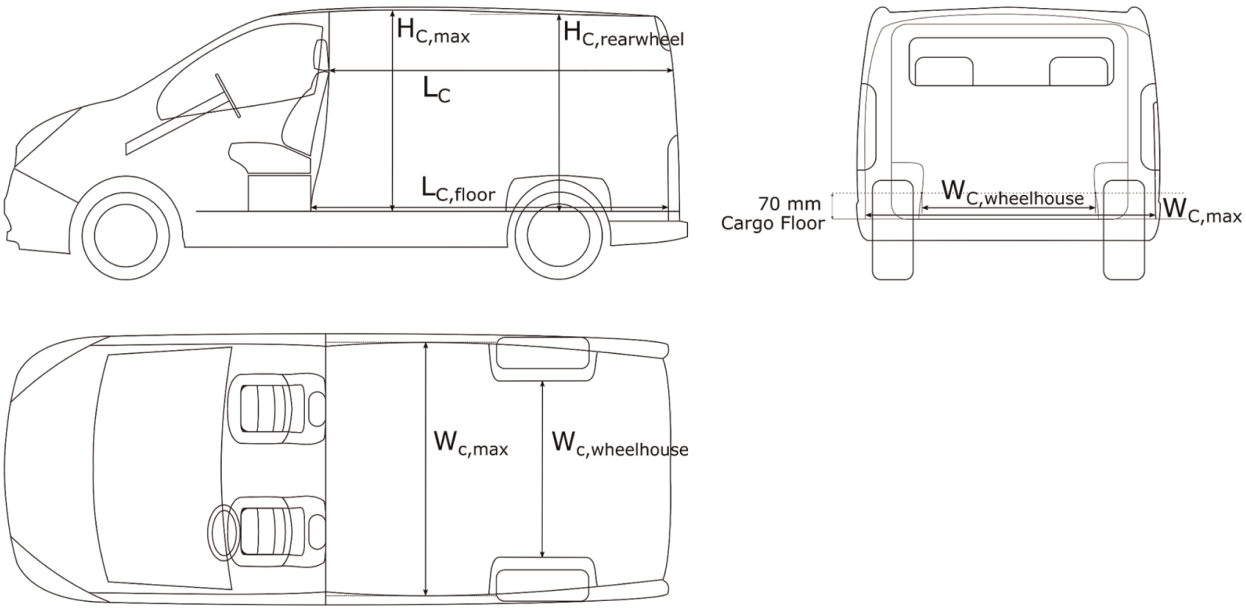

10. HEV and PEV

The following provisions shall apply only in the case of HEV and PEV.

10.1 Definition of vehicle's powertrain architecture

10.1.1 Definition of powertrain configuration

The configuration of the vehicle's powertrain shall be determined in accordance with the following definitions:

In the case of a HEV:

(a) "P" in the case of a parallel HEV

(b) "S" in the case of a serial HEV

(c) "S-IEPC" in the case an IEPC component is present in the vehicle

(d) "IHPC Type 1" in the case the parameter "IHPCType" of the electric machine component is set to "IHPC Type 1"

In the case of a PEV:

(a) "E" in the case an EM component is present in the vehicle

(b) "E-IEPC" in the case an IEPC component is present in the vehicle

10.1.2 Definition of positions of EMs in the vehicle's powertrain

Where the configuration of the vehicle's powertrain in accordance with point 10.1.1 is "P", "S" or "E", the position of the EM installed in the vehicle's powertrain shall be determined in accordance with the definitions set out in Table 14.

Table 14

Possible positions of EMs in the vehicle's powertrain

Position index of EM	Powertrain configuration in accordance with point 10.1.1	Transmission type in accordance with Table 1 in Appendix 12 of Annex VI	Definition / Requirements (*)	Further explanations
1	P	AMT, APT-S, APT-P	Connected to the powertrain upstream of the clutch (in the case of AMT) or upstream of the torque converter input shaft (in the case of APT-S or APT-P). The EM is connected to the crankshaft of the ICE directly or via a mechanical connection type (e.g. belt).	Distinction of P0: EMs which can as a matter of principle not contribute to the propulsion of the vehicle (i.e. alternators) are handled in the input to auxiliary systems (see Table 3 of this Annex for lorries, Table 3a of this Annex for buses and Annex IX). However, EMs at this position which can in principle contribute to the propulsion of the vehicle but for which the declared maximum torque in accordance with Table 9 of this Annex is set to zero shall be declared as "P1".
2	P	AMT	The electric machine is connected to the powertrain downstream of the clutch and upstream of the transmission input shaft.	
2	E, S	AMT, APT-N, APT-S, APT-P	The electric machine is connected to the powertrain upstream of the transmission input shaft (in the case of AMT or APT-N) or upstream of the torque converter input shaft (in the case of APT-S, APT-P).	
2,5	P	AMT, APT-S, APT-P	The electric machine is connected to the powertrain downstream of the clutch (in the case of AMT) or downstream of the torque converter input shaft (in the case of APT-S or APT-P) and upstream of the transmission output shaft.	The EM is connected to a specific shaft inside the transmission (e.g. layshaft). A specific transmission ratio for each mechanical gear in the transmission according to Table 8 shall be provided.
3	P	AMT, APT-S, APT-P	The electric machine is connected to the powertrain downstream of the transmission output shaft and upstream of the axle.	

Position index of EM	Powertrain configuration in accordance with point 10.1.1	Transmission type in accordance with Table 1 in Appendix 12 of Annex VI	Definition / Requirements (*)	Further explanations
3	E, S	n.a.	The electric machine is connected to the powertrain upstream of the axle.	
4	P	AMT, APT-S, APT-P	The electric machine is connected to the powertrain downstream of the axle.	
4	E, S	n.a.	The electric machine is connected to the wheel hub and the same arrangement is installed twice in symmetrical application (i.e. one on the left and one on the right side of the vehicle at the same wheel position in logitudinal direction).	
GEN	S	n.a.	The electric machine is mechanically connected to an ICE but under no operational circumstances mechanically connected to the wheels of the vehicle.	

(*) The term EM as used here includes an additional ADC component, if present.

10.1.3 Definition of powertrain architecture ID

The input value for the powertrain architecture ID required in accordance with Table 7 shall be determined based on the powertrain configuration in accordance with point 10.1.1 and the position of the EM in the vehicle's powertrain in accordance with point 10.1.2 (if applicable) from the valid combinations of inputs into the simulation tool listed in Table 15.

In the case of the powertrain configuration in accordance with point 10.1.1 being "IHPC Type 1" the following provisions shall apply:

(a) The powertrain architecture ID "P2" shall be declared in accordance with Table 7 and the powertrain component data as indicated in Table 15 for "P2" shall be the input to the simulation tool with separate component data for the EM and the transmission determined in accordance with point 4.4.3 of Annex Xb.

(b) The component data for the EM in accordance with subpoint (a) shall be provided to the simulation tool with the parameter "PowertrainPosition" in accordance with Table 8 set to "2".

Table 15

Valid inputs of powertrain architecture into the simulation tool

Powertrain type	Powertrain configuration	Architecture ID for VECTO input	Powertrain component present in vehicle								Comments
			ICE	EM position GEN	EM position 1	EM position 2	transmission	EM position 3	axle	EM position 4	
PEV	E	E2	no	no	no	yes	yes	no	yes	no	
		E3	no	no	no	no	no	yes	yes	no	
		E4	no	no	no	no	no	no	no	yes	
	IEPC	E-IEPC	no	no	no	no	no	no	(1)	no	
HEV	P	P1	yes	no	yes	no	yes	no	yes	no	
		P2	yes	no	no	yes	yes	no	yes	no	(2)
		P2.5	yes	no	no	yes	yes	no	yes	no	(3)
		P3	yes	no	no	no	yes	yes	yes	no	(4)
		P4	yes	no	no	no	yes	no	yes	yes	
	S	S2	yes	yes	no	yes	yes	no	yes	no	
		S3	yes	yes	no	no	no	yes	yes	no	
		S4	yes	yes	no	no	no	no	no	yes	
		S-IEPC	yes	yes	no	no	no	no	(1)	no	

(1) "Yes" (i.e. axle component present) only in the case that both parameters "DifferentialIncluded" and "DesignTypeWheelMotor" are set to "false"
(2) Not applicable for transmission types APT-S and APT-P
(3) Where the EM is connected to a specific shaft inside the transmission (e.g. layshaft) in accordance with the definition set out in Table 8
(4) Not applicable for front wheel driven vehicles

10.2 Definition of boosting limitation for parallel HEV

The vehicle manufacturer may declare limitations of the total propulsion torque of the whole powertrain referring to the transmission input shaft for a parallel HEV in order to restrict the boosting capabilities of the vehicle.

The declaration of such limitations is allowed only in the case that the powertrain configuration in accordance with point 10.1.1 is "P" or "IHPC Type 1".

The limitations are declared as additional torque allowed on top of the ICE full load curve dependent on the rotational speed of the transmission input shaft. Linear interpolation is performed in the simulation tool to determine the applicable additional torque between the declared values at two specific rotational speeds. In the rotational speed range from 0 to engine idling speed (in accordance with point 7.1) the full load torque available from the ICE equals only the ICE full load torque at engine idling speed due to the modelling of the clutch behaviour during vehicle starts.

Where such a limitation is declared, values for the additional torque shall be declared at least at a rotational speed of 0 and at the maximum rotational speed of the ICE full load curve. Any arbitrary number of values may be declared in between the range of zero and the maximum rotational speed of the ICE full load curve. Declared values lower than zero shall not be allowed for the additional torque.

The vehicle manufacturer may declare such limitations which match exactly the ICE full load curve by declaring values of 0 Nm for the additional torque.

10.3 Engine stop-start functionality for HEVs

Where the vehicle is equipped with an engine stop-start functionality in accordance with point 8.1.1 considering the boundary conditions in point 8.4, the input parameter P271 in accordance with Table 6 shall be set to true.

11. Transfer of results of the simulation tool to other vehicles

11.1. Results of the simulation tool may be transferred to other vehicles as provided for in Article 9(6), provided that all of the following conditions are met:

(a) input data and input information is completely identical with exception of VIN (P238) and Date element (P239). In the case of simulations for primary heavy buses, additional input data and input information relevant for the interim vehicle and available already at the initial stage may differ, but special measures have to be taken in this case;

(b) the version of the simulation tool is identical.

11.2. For the transfer of results the following result files shall be considered:

(a) medium and heavy lorries: manufacturer's records file and customer information file

(b) primary heavy buses: manufacturer's records file and vehicle information file

(c) complete or completed heavy buses: manufacturer's records file, customer information file and vehicle information file

11.3. To carry out the transfer of results the files as mentioned in 10.2. shall be modified by replacing the data elements as set out in the subpoints with updated information. Modifications are allowed only for data elements related to the current stage of completion.

11.3.1 Manufacturer's records file

(a) VIN (Annex IV, Part I, point 1.1.3)

(b) Date when the output file was created (Annex IV, Part I, point 3.2)

11.3.2 Customer information file

(a) VIN (Annex IV, Part II, point 1.1.1)

(b) Date when the output file was created (Annex IV, Part II, point 3.2)

11.3.3 Vehicle information file

11.3.3.1. In the case of a primary heavy bus:

(a) VIN (Annex IV, Part III, point 1.1)

(b) Date when the output file was created (Annex IV, Part III, point 1.3.2)

11.3.3.2. Where a manufacturer of a primary heavy bus provides data going beyond the primary vehicle requirements and which differs between original vehicle and transferred vehicle, the related data elements in the vehicle information file shall be updated accordingly.

11.3.3.3. In the case of a complete or completed heavy bus:

(a) VIN (Annex IV, Part III, point 2.1)

(b) Date when the output file was created (Annex IV, Part III, point 2.2.2)

11.3.4 After the modifications as described above the signature elements as set out below shall be updated.

11.3.4.1. Lorries:

(a) Manufacturer's records file: Annex IV, Part I, points 3.6. and 3.7

(b) Customer information file: Annex IV, Part II, points 3.3 and 3.4

11.3.4.2. Primary heavy buses:

(a) Manufacturer's records file: Annex IV, Part I, points 3.3 and 3.4

(b) Vehicle information file: Annex IV, Part III, points 1.4.1 and 1.4.2

11.3.4.3. Primary heavy buses where additionally input data for the interim vehicle has been provided:

(a) Manufacturer's records file: Annex IV, Part I, points 3.3 and 3.4

(b) Vehicle information file: Annex IV, Part III, points 1.4.1, 1.4.2 and 2.3.1

11.3.4.4. Complete or completed heavy buses

(a) Manufacturer's records file: Annex IV, Part I, points 3.6 and 3.7

(b) Vehicle information file: Annex IV, Part III, point 2.3.1

11.4. Where CO_2 emissions and fuel consumption cannot be determined for the original vehicle due to a malfunction of the simulation tool, the same measures shall apply to the vehicles with transferred results.

11.5. If the approach to transfer results to other vehicles as laid down in this paragraph is applied by a manufacturer, the related process shall be demonstrated to the approval authority as part of granting the process licence.

Appendix 1

Vehicle technologies for which the obligations laid down in Article 9(1), first subparagraph, do not apply, as provided in that subparagraph

Table 1

Vehicle technology category	Criteria for exemption	Input parameter value in accordance with Table 5 of this Annex
Fuel cell vehicle	The vehicle is either a fuel cell vehicle or a fuel cell hybrid vehicle in accordance with point 2 (12) or (13) of this Annex.	"FCV Article 9 exempted"
ICE operated with hydrogen	The vehicle is equipped with an ICE that is capable of running on hydrogen fuel.	"H2 ICE Article 9 exempted"
Dual-fuel	Dual-fuel vehicles of types 1B, 2B and 3B as defined in Article 2(53), 2(55) and 2(56) of Regulation (EU) No 582/2011	"Dual-fuel vehicle Article 9 exempted"
HEV	Vehicles shall be exempted where at least one of the following criteria apply: — The vehicle is equipped with multiple EMs which are not placed at the same connection point in the drivetrain in accordance with point 10.1.2 of this Annex. — The vehicle is equipped with multiple EMs which are placed at the same connection point in the drivetrain in accordance with point 10.1.2 of this Annex but do not have exactly identical specifications (i.e. the same component certificate). This criterion shall not apply where the vehicle is equipped with an IHPC Type 1. — The vehicle has a powertrain architecture other than P1 to P4, S2 to S4, S-IEPC in accordance with point 10.1.3 of this Annex or other than IHPC Type 1.	"HEV Article 9 exempted"
PEV	Vehicles shall be exempted where at least one of the following criteria apply: — The vehicle is equipped with multiple EMs which are not placed at the same connection point in the drivetrain in accordance with point 10.1.2 of this Annex.	"PEV Article 9 exempted"

Vehicle technology category	Criteria for exemption	Input parameter value in accordance with Table 5 of this Annex
	— The vehicle is equipped with multiple EMs which are placed at the same connection point in the drivetrain in accordance with point 10.1.2 of this Annex but do not have exactly identical specifications (i.e. the same component certificate). This criterion shall not apply where the vehicle is equipped with an IEPC. — The vehicle has a powertrain architecture other than E2 to E4 or E-IEPC in accordance with point 10.1.3 of this Annex.	
Multiple permanently mechanically independent powertrains	The vehicle is equipped with more than one powertrain where each powertrain is propelling different wheel axle(s) of the vehicle and where different powertrains can under no circumstances be mechanically connected. In this regard hydraulically driven axles shall, in accordance with point 5(a) of this Annex, be treated as non-driven axles and shall thus not be counted as an independent powertrain.	"Multiple powertrains Article 9 exempted"
In-motion charging	The vehicle is equipped with means for conductive or inductive supply of electric energy to the vehicle in motion, which is at least partly directly used for vehicle propulsion and optionally for charging a REESS.	"In-motion charging Article 9 exempted"
Non-electric hybrid vehicles	The vehicle is a HV but not a HEV in accordance with point 2 (26) and (27) of this Annex.	"HV Article 9 exempted"

(*) Commission Regulation (EU) No 1230/2012 of 12 December 2012 implementing Regulation (EC) No 661/2009 of the European Parliament and of the Council with regard to type-approval requirements for masses and dimensions of motor vehicles and their trailers and amending Directive 2007/46/EC of the European Parliament and of the Council (OJ L 353, 21.12.2012, p. 31).

(**) Regulation (EU) 2019/2144 of the European Parliament and of the Council of 27 November 2019 on type-approval requirements for motor vehicles and their trailers, and systems, components and separate technical units intended for such vehicles, as regards their general safety and the protection of vehicle occupants and vulnerable road users, amending Regulation (EU) 2018/858 of the European Parliament and of the Council and repealing Regulations (EC) No 78/2009, (EC) No 79/2009 and (EC) No 661/2009 of the European Parliament and of the Council and Commission Regulations (EC) No 631/2009, (EU) No 406/2010, (EU) No 672/2010, (EU) No 1003/2010, (EU) No 1005/2010, (EU) No 1008/2010, (EU) No 1009/2010, (EU) No 19/2011, (EU) No 109/2011, (EU) No 458/2011, (EU) No 65/2012, (EU) No 130/2012, (EU) No 347/2012, (EU) No 351/2012, (EU) No 1230/2012 and (EU) 2015/166 (OJ L 325, 16.12.2019, p. 1).'

ANNEX IV

'ANNEX IV

MODEL OF THE OUTPUT FILES OF THE SIMULATION TOOL

1. Introduction

This Annex describes the models of the manufacturer's records file (MRF), the customer information file (CIF) and the vehicle information file (VIF).

2. Definitions

(1) "actual charge depleting range": The range that can be driven in charge depleting mode based on the usable amount of REESS energy, without any interim charging.

(2) "equivalent all electric range": The part of the actual charge depleting range that can be attributed to the use of electric energy from the REESS, i.e. without any energy provided by the non-electric propulsion energy storage system.

(3) "zero CO_2 emissions range": The range that can be attributed to energy provided by propulsion energy storage systems considered with zero CO_2 impact.

3. Model of the output files

PART I

Vehicle CO_2 emissions and fuel consumption – Manufacturer's records file

The manufacturer's records file shall be produced by the simulation tool and shall at least contain the following information, if applicable for the specific vehicle or manufacturing step:

1. Vehicle, component, separate technical unit and systems data

1.1. Vehicle data

1.1.1. Name and address of manufacturer (s) .....

1.1.2. Vehicle model / Commercial Name .....

1.1.3. Vehicle identification number (VIN) .....

1.1.4. Vehicle category (N2, N3, M3) .....

1.1.5. Axle configuration .....

1.1.6. Technically Permissible Maximum Laden Mass (t) .....

1.1.7. Vehicle group in accordance with Annex I .....

1.1.7a. Vehicle (sub-)group for CO_2 standards .....

1.1.8. Corrected actual mass (kg) .....

1.1.9. Vocational vehicle (yes/no) .....

1.1.10. Zero emission heavy-duty vehicle (yes/no) .....

1.1.11. Hybrid electric heavy-duty vehicle (yes/no) .....

1.1.12. Dual-fuel vehicle (yes/no) .....

1.1.13. Sleeper cab (yes/no) .....

1.1.14. HEV architecture (e.g. P1, P2) .....

1.1.15. PEV architecture (e.g. E2, E3) .....

1.1.16. Off-vehicle charging capability (yes/no) .....

1.1.17. –

1.1.18. Off-vehicle charging maximum power (kW) .....

1.1.19. Vehicle technology exempted according to Article 9 .....

1.1.20. Class of bus (e.g. I, I+II etc.) .....

1.1.21. Number passengers upper deck .....

1.1.22. Number passengers lower deck .....

1.1.23. Code for bodywork (e.g. CA, CB) .....

1.1.24. Low Entry (yes/no) .....

1.1.25. Height integrated body (mm) .....

1.1.26. Vehicle length (mm) .....

1.1.27. Vehicle width (mm) .....

1.1.28. Door drive technology (pneumatic, electric, mixed) .....

1.1.29. Tank system in the case of natural gas (compressed, liquified) .....

1.1.30. Sum net power (only for Article 9 exempted) (kW) .....

1.2. Main engine specifications

1.2.1. Engine model .....

1.2.2. Engine certification number .....

1.2.3. Engine rated power (kW) .....

1.2.4. Engine idling speed (1/min) .....

1.2.5. Engine rated speed (1/min) .....

1.2.6. Engine capacity (ltr) .....

1.2.7. Fuel type (Diesel CI/CNG PI/LNG PI) .....

1.2.8. Hash of the engine input data and input information .....

1.2.9. Waste heat recovery system (yes/no) .....

1.2.10. Waste heat recovery type(s) (mechanical/electrical) .....

1.3. Main transmission specifications

1.3.1. Transmission model .....

1.3.2. Transmission certification number .....

1.3.3. Main option used for generation of loss maps (Option1/Option2/Option3/Standard values) .....

1.3.4. Transmission type (SMT, AMT, APT-S, APT-P, APT-N) .....

1.3.5. No. of gears .....

1.3.6. Transmission ratio final gear .....

1.3.7. Retarder type .....

1.3.8. Power take off (yes/no) .....

1.3.9. Hash of the transmission input data and input information .....

1.4. Retarder specifications

1.4.1. Retarder model .....

1.4.2. Retarder certification number .....

1.4.3. Certification option used for generation of a loss map (standard values/measurement) .....

1.4.4. Hash of the other torque transferring components input data and input information .....

1.5. Torque converter specification

1.5.1. Torque converter model .....

1.5.2. Torque converter certification number .....

1.5.3. Certification option used for generation of a loss map (standard values/measurement) .....

1.5.4. Hash of the torque converter input data and input information .....

1.6. Angle drive specifications

1.6.1. Angle drive model .....

1.6.2. Angle drive certification number .....

1.6.3. Certification option used for generation of a loss map (standard values/measurement) .....

1.6.4. Angle drive ratio .....

1.6.5. Hash of the additional drivetrain components input data and input information .....

1.7. Axle specifications

1.7.1. Axle model .....

1.7.2. Axle certification number .....

1.7.3. Certification option used for generation of a loss map (standard values/measurement) .....

1.7.4. Axle type (e.g. single reduction axle) .....

1.7.5. Axle ratio .....

1.7.6. Hash of the axle input data and input information .....

1.8. Aerodynamics

1.8.1. Model .....

1.8.2. Certification option used for generation of CdxA (standard values/measurement) .....

1.8.3. CdxA Certification number (if applicable) .....

1.8.4. CdxA value .....

1.8.5. Hash of the air drag input data and input information .....

1.9. Main tyre specifications

1.9.1. Tyre dimension axle 1 .....

1.9.2. Tyre certification number axle 1 .....

1.9.3. Specific RRC of all tyres on axle 1 .....

1.9.3a. Hash of the tyre input data and input information axle 1 .....

1.9.4. Tyre dimension axle 2 .....

1.9.5. Twin axle (yes/no) axle 2 .....

1.9.6. Tyre certification number axle 2 .....

1.9.7. Specific RRC of all tyres on axle 2 .....

1.9.7a. Hash of the tyre input data and input information axle 2 .....

1.9.8. Tyre dimension axle 3 .....

1.9.9. Twin axle (yes/no) axle 3 .....

1.9.10. Tyre certification number axle 3 .....

1.9.11. Specific RRC of all tyres on axle 3 .....

1.9.11a. Hash of the tyre input data and input information axle 3 .....

1.9.12. Tyre dimension axle 4 .....

1.9.13. Twin axle (yes/no) axle 4 .....

1.9.14. Tyre certification number axle 4 .....

1.9.15. Specific RRC of all tyres on axle 4 .....

1.9.16. Hash of the tyre input data and input information axle 4 .....

1.10. Auxiliary specifications

1.10.1. Engine cooling fan technology .....

1.10.2. Steering pump technology .....

1.10.3. Electric system

1.10.3.1. Alternator technology (conventional, smart, no alternator) .....

1.10.3.2. Max alternator power (smart alternator) (kW) .....

1.10.3.3. Electric storage capacity (smart alternator) (kWh) .....

1.10.3.4. Day running lights LED (yes/no) .....

1.10.3.5. Head lights LED (yes/no) .....

1.10.3.6. Position lights LED (yes/no) .....

1.10.3.7. Brake lights LED (yes/no) .....

1.10.3.8. Interior lights LED (yes/no) .....

1.10.4. Pneumatic system

1.10.4.1. Technology .....

1.10.4.2. Compressor ratio .....

1.10.4.3. Smart compression system .....

1.10.4.4. Smart regeneration system .....

1.10.4.5. Air suspension control .....

1.10.4.6. Reagent dosing (exhaust after-treatment) .....

1.10.5. HVAC system

1.10.5.1. System configuration number .....

1.10.5.2. Heat pump type cooling driver compartment .....

1.10.5.3. Heat pump mode heating driver compartment .....

1.10.5.4. Heat pump type cooling passenger compartment .....

1.10.5.5. Heat pump mode heating passenger compartment .....

1.10.5.6. Auxiliary heater power (kW) .....

1.10.5.7. Double glasing (yes/no) .....

1.10.5.8. Adjustable coolant thermostat (yes/no) .....

1.10.5.9. Adjustable auxiliary heater .....

1.10.5.10. Engine waste gas heat exchanger (yes/no) .....

1.10.5.11. Separate air distribution ducts (yes/no) .....

1.10.5.12. Water electric heater

1.10.5.13. Air electric heater

1.10.5.14. Other heating technology

1.11. Engine torque limitations

1.11.1. Engine torque limit at gear 1 (% of max engine torque) .....

1.11.2. Engine torque limit at gear 2 (% of max engine torque) .....

1.11.3. Engine torque limit at gear 3 (% of max engine torque) .....

1.11.4. Engine torque limit at gear … (% of max engine torque)

1.12. Advanced driver assistance systems (ADAS)

1.12.1. Engine stop-start during vehicle stops (yes/no) .....

1.12.2. Eco-roll without engine stop-start (yes/no) .....

1.12.3. Eco-roll with engine stop-start (yes/no) .....

1.12.4. Predictive cruise control (yes/no) .....

1.13. Electric machine system(s) specifications

1.13.1 Model .....

1.13.2. Certification number

1.13.3 Type (PSM, ESM, IM, SRM) .....

1.13.4. Position (GEN 1, 2, 3, 4) .....

1.13.5. –

1.13.6. Count at position .....

1.13.7. Rated power (kW) .....

1.13.8. Maximum continuous power (kW) .....

1.13.9. Certification option for generation of electric power consumption map .....

1.13.10. Hash of the input data and input information .....

1.13.11. ADC model .....

1.13.12. ADC certification number .....

1.13.13. Certification option used for generation of an ADC loss map (standard values/measurement) .....

1.13.14. ADC ratio .....

1.13.15. Hash of the additional driveline components' input data and input information .....

1.14. Integrated electric powertrain system (IEPC) specifications

1.14.1 Model .....

1.14.2. Certification number .....

1.14.3. Rated power (kW) .....

1.14.4. Maximum continuous power (kW) .....

1.14.5. Number of gears .....

1.14.6. Lowest total transmission ratio (highest gear times axle ratio if applicable) .....

1.14.7. Differential included (yes/no) .....

1.14.8. Certification option for generation of electric power consumption map .....

1.14.9. Hash of the input data and input information .....

1.15. Rechargeable Energy Storage Systems specifications

1.15.1 Model .....

1.15.2. Certification number .....

1.15.3. Nominal voltage (V) .....

1.15.4. Total storage capacity (kWh) .....

1.15.5. Total usable capacity in simulation (kWh) .....

1.15.6. Certification option for electric system losses .....

1.15.7. Hash of the input data and input information .....

1.15.8. StringID (-) .....

2. Mission profile and loading dependent values

2.1. Simulation parameters (for each mission profile and loading combination, for OVC-HEVs additionally for charge depleting, charge sustaining mode and weighted)

2.1.1. Mission profile .....

2.1.2. Load (as defined in the simulation tool) (kg) .....

2.1.2a. Passenger count .....

2.1.3. Total vehicle mass in simulation (kg) .....

2.1.4. OVC mode (charge depleting, charge sustaining, weighted) .....

2.2. Vehicle driving performance and information for simulation quality check

2.2.1. Average speed (km/h) .....

2.2.2. Minimum instantaneous speed (km/h) .....

2.2.3. Maximum instantaneous speed (km/h) .....

2.2.4. Maximum deceleration (m/s^2) .....

2.2.5. Maximum acceleration (m/s^2) .....

2.2.6. Full load percentage of driving time .....

2.2.7. Total number of gear shifts .....

2.2.8. Total driven distance (km) .....

2.3. Fuel and energy consumption (per fuel type and electric energy) and CO_2 results (total)

2.3.1. Fuel consumption (g/km) .....

2.3.2. Fuel consumption (g/t-km) .....

2.3.3. Fuel consumption (g/p-km) .....

2.3.4. Fuel consumption (g/m^3-km) .....

2.3.5. Fuel consumption (l/100km) .....

2.3.6. Fuel consumption (l/t-km) .....

2.3.7. Fuel consumption (l/p-km) .....

2.3.8. Fuel consumption (l/m^3-km) .....

2.3.9. Energy consumption (MJ/km, kWh/km) .....

2.3.10. Energy consumption (MJ/t-km, kWh/t-km) .....

2.3.11. Energy consumption (MJ/p-km, kWh/p-km) .....

2.3.12. Energy consumption (MJ/m^3-km, kWh/m^3-km) .....

2.3.13. CO_2 (g/km) .....

2.3.14. CO_2 (g/t-km) .....

2.3.15. CO_2 (g/p-km) .....

2.3.16. CO_2 (g/m^3-km) .....

2.4. Electric and zero emission ranges

2.4.1. Actual charge depleting range (km) .....

2.4.2. Equivalent all electric range (km) .....

2.4.3. Zero CO_2 emission range (km) .....

3. Software information

3.1. Simulation tool version (X.X.X) .....

3.2. Date and time of the simulation .....

3.3. Cryptographic hash simulation tool input information and input data of the primary vehicle (if applicable) .....

3.4. Cryptographic hash of the manufacturer's record file of the primary vehicle (if applicable) .....

3.5. Cryptographic hash of the vehicle information file as produced by the simulation tool (if applicable) .....

3.6. Cryptographic hash of the simulation tool input information and input data .....

3.7. Cryptographic hash of the manufacturer's records file .....

PART II

Vehicle CO_2 emissions and fuel consumption - Customer information file

The customer information file shall be produced by the simulation tool and shall at least contain the following information, if applicable for the specific vehicle or certification step:

1. Vehicle, component, separate technical unit and systems data

1.1. Vehicle data

1.1.1. Vehicle identification number (VIN) .....

1.1.2. Vehicle category (N_2, N_3, M_3) .....

1.1.3. Axle configuration .....

1.1.4. Technically Permissible Maximum Laden Mass (t) .....

1.1.5. Vehicle group in accordance with Annex I .....

1.1.5a. Vehicle (sub-)group for CO_2 standards .....

1.1.6. Name and address(es) of manufacturer(s) .....

1.1.7. Model .....

1.1.8. Corrected actual mass (kg) .....

1.1.9. Vocational vehicle (yes/no) .....

1.1.10. Zero emission heavy-duty vehicle (yes/no) .....

1.1.11 Hybrid electric heavy-duty vehicle (yes/no) .....

1.1.12 Dual-fuel vehicle (yes/no) .....

1.1.12a. Waste Heat recovery (yes/no) .....

1.1.13. Sleeper cab (yes/no) .....

1.1.14. HEV architecture (e.g. P1, P2) .....

1.1.15. PEV architecture (e.g. E2, E3) .....

1.1.16. Off-vehicle charging capability (yes/no) .....

1.1.17. –

1.1.18. Off-vehicle charging maximum power (kW) .....

1.1.19. Vehicle technology exempted from Article 9 .....

1.1.20. Class of bus (e.g. I, I+II etc.) .....

1.1.21. Total number of registered passengers .....

1.2. Component, separate technical unit and systems data

1.2.1. Engine rated power (kW) .....

1.2.2. Engine capacity (ltr) .....

1.2.3. Fuel type (Diesel CI/CNG PI/LNG PI) .....

1.2.4. Transmission values (measured/standard) .....

1.2.5. Transmission type (SMT, AMT, APT, none) .....

1.2.6. No. of gears .....

1.2.7. Retarder (yes/no) .....

1.2.8. Axle ratio .....

1.2.9. Average rolling resistance coefficient (RRC) of all tyres of the motor vehicle: .....

1.2.10a. Tyre dimension for each axle of the motor vehicle .....

1.2.10b. Fuel efficiency class(es) of the tyres in accordance with Regulation (EU) 2020/740 for each axle of the motor vehicle .....

1.2.10c. Tyre certification number for each axle of the motor vehicle .....

1.2.11. Engine stop-start during vehicle stops (yes/no) .....

1.2.12. Eco-roll without engine stop-start (yes/no) .....

1.2.13. Eco-roll with engine stop-start (yes/no) .....

1.2.14. Predictive cruise control (yes/no) .....

1.2.15 Electric machine system(s) total rated propulsion power (kW) .....

1.2.16 Electric machine system total maximum continuous propulsion power (kW) .....

1.2.17 REESS total storage capacity (kWh) .....

1.2.18 REESS useable storage capacity in simulation (kWh) .....

1.3. Auxiliary configuration

1.3.1. Steering pump technology .....

1.3.2. Electric system

1.3.2.1 Alternator technology (conventional, smart, no alternator) .....

1.3.2.2 Max alternator power (smart alternator) (kW) .....

1.3.2.3 Electric storage capacity (smart alternator) (kWh) .....

1.3.3. Pneumatic system

1.3.3.1 Smart compression system .....

1.3.3.2 Smart regeneration system .....

1.3.4. HVAC system

1.3.4.1 System configuration .....

1.3.4.2 Auxiliary heater power (kW) .....

1.3.4.3 Double glazing (yes/no) .....

2. CO_2 emissions and fuel consumption of the vehicle (for each mission profile and loading combination, for OVC-HEVs additionally for charge depleting, charge sustaining mode and weighted)

2.1. Simulation parameters

2.1.1 Mission profile .....

2.1.2 Payload (kg) .....

2.1.3 Passenger information

2.1.3.1 Number of passengers in simulation ..... (-)

2.1.3.2 Mass of passengers in simulation ..... (kg)

2.1.4 Total vehicle mass in simulation (kg) .....

2.1.5. OVC mode (charge depleting, charge sustaining, weighted) .....

2.2. Average speed (km/h) .....

2.3. Fuel and energy consumption results (per fuel type and electric energy)

2.3.1. Fuel consumption (g/km) .....

2.3.2. Fuel consumption (g/t-km) .....

2.3.3. Fuel consumption (g/p-km) .....

2.3.4. Fuel consumption (g/m^3-km) .....

2.3.5. Fuel consumption (l/100km) .....

2.3.6. Fuel consumption (l/t-km) .....

2.3.7. Fuel consumption (l/p-km) .....

2.3.8. Fuel consumption (l/m^3-km) .....

2.3.9. Energy consumption (MJ/km, kWh/km) .....

2.3.10. Energy consumption (MJ/t-km, kWh/t-km) .....

2.3.11. Energy consumption (MJ/p-km, kWh/p-km) .....

2.3.12. Energy consumption (MJ/m^3-km, kWh/m^3-km) .....

2.4. CO_2 results (for each mission profile and loading combination)

2.4.1. CO_2 (g/km) .....

2.4.2. CO_2 (g/t-km) .....

2.4.3. CO_2 (g/p-km) .....

2.4.5. CO_2 (g/m^3-km) .....

2.5. Electric Ranges

2.5.1. Actual charge depleting range (km) .....

2.5.2. Equivalent all electric range (km) .....

2.5.3. Zero CO_2 emission range (km) .....

2.6. Weighted results

2.6.1. Specific CO_2 emissions (gCO_2/t-km) .....

2.6.2. Specific electric energy consumption (kWh/t-km) .....

2.6.3. Average payload value (t) .....

2.6.4. Specific CO_2 emissions (gCO_2/p-km) .....

2.6.5. Specific electric energy consumption (kWh/p-km) .....

2.6.6. Average passenger count (p) .....

2.6.7. Actual charge depleting range (km) .....

2.6.8. Equivalent all electric range (km) .....

2.6.9. Zero CO_2 emission range (km) .....

3. Software information

3.1. Simulation tool version .....

3.2. Date and time of the simulation .....

3.3. Cryptographic hash of the simulation tool input information and input data of the primary vehicle (if applicable) .....

3.4. Cryptographic hash of the manufacturer's records file of the primary vehicle (if applicable) .....

3.5. Cryptographic hash of the vehicle simulation tool input information and input data .....

3.6. Cryptographic hash of the manufacturer's records file .....

3.7. Cryptographic hash of the customer information file .....

PART III

Vehicle CO_2 emissions and fuel consumption – Vehicle information file for heavy buses

The vehicle information file shall be produced in the case of heavy buses to transfer the relevant input data, input information and simulation results to subsequent certification steps following the method as described in point 2 of Annex I.

The vehicle information file shall at least contain the following content:

1. In the case of a primary vehicle:

1.1. Input data and input information as set out in Annex III for the primary vehicle except: engine fuel map; engine correction factors WHTC_Urban, WHTC_Rural, WHTC_Motorway, BFColdHot, CFRegPer; torque converter characteristics; loss maps for transmission, retarder, angle drive and axle; electric power consumption map(s) for electric motor systems and IEPC; electric loss parameters for REESS

1.2. For each mission profile and loading condition:

1.2.1. Total vehicle mass in simulation (kg) .....

1.2.2. Number of passengers in simulation (-) .....

1.2.3. Energy consumption (MJ/km) .....

1.3. Software information

1.3.1. Simulation tool version .....

1.3.2. Date and time of the simulation .....

1.4. Cryptographic hashes

1.4.1. Cryptographic hash of the manufacturers records file of the primary vehicle .....

1.4.2. Cryptographic hash of the vehicle information file .....

2. For each interim, complete or completed vehicle

2.1. Input data and input information as set out for the complete or completed vehicle in Annex III and which was provided by the particular manufacturer

2.2. Software information

2.2.1. Simulation tool version .....

2.2.2. Date and time of the simulation .....

2.3. Cryptographic hashes

2.3.1. Cryptographic hash of the vehicle information file .....'

ANNEX V

Annex V is amended as follows:

(1) in point 2, the heading and the first paragraph are replaced by the following:

'2. Definitions

For the purposes of this Annex the definitions set out in UN Regulation No. 49 (*) and, in addition to these, the following definitions shall apply:

(*) Regulation No. 49 of the Economic Commission for Europe of the United Nations (UN/ECE) – Uniform provisions concerning the measures to be taken against the emission of gaseous and particulate pollutants from compression-ignition engines and positive ignition engines for use in vehicles (OJ L 171, 24.6.2013, p. 1).';

(2) in point 2, first paragraph, the following points are added:

'(8) "Waste Heat Recovery system" or "WHR system" means all devices converting energy from the exhaust gas or from operating fluids in engine cooling systems into electrical or mechanical energy;

(9) "WHR system with no external output" or "WHR_no_ext" means a WHR system which generates mechanical energy and is mechanically connected to the engine crankshaft in order to feed its generated energy directly back to the engine crankshaft;

(10) "WHR system with external mechanical output" or "WHR_mech" means a WHR system which generates mechanical energy and feeds it to other elements in the vehicle's drivetrain than the engine or to a rechargeable storage;

(11) "WHR system with external electrical output" or "WHR_elec" means a WHR system which generates electrical energy and feeds it to the vehicle's electric circuit or to a rechargeable storage;

(12) "P_WHR_net" means the net power generated by a WHR system in accordance with point 3.1.6;

(13) "E_WHR_net" means the net energy generated by a WHR system over a certain amount of time determined by integrating P_WHR_net;';

(3) in point 2 the second paragraph is replaced by the following:

'The definitions set out in paragraphs 3.1.5 and 3.1.6 of Annex 4 to UN Regulation No. 49 shall not apply.';

(4) in point 3, first paragraph, the first sentence is replaced by the following:

'The calibration laboratory facilities shall comply with the requirements of either IATF 16949, ISO 9000 series or ISO/IEC 17025'.

(5) in point 3.1.1, first paragraph, points 1, 2 and 3 are replaced by the following:

'(1) The parameter "fa" describing the laboratory test conditions, determined in accordance with paragraph 6.1 of Annex 4 to UN Regulation No. 49, shall be within the following limits: $0{,}96 \leq fa \leq 1{,}04$.

(2) The absolute temperature (Ta) of the engine intake air expressed in Kelvin, determined in accordance with paragraph 6.1 of Annex 4 to UN Regulation No. 49 shall be within the following limits: $283\ K \leq Ta \leq 303\ K$.

(3) The atmospheric pressure expressed in kPa, determined in accordance with paragraph 6.1 of Annex 4 to UN Regulation No. 49 shall be within the following limits: $90\ kPa \leq ps \leq 102\ kPa$.';

(6) point 3.1.2 is replaced by the following:

'3.1.2. Engine installation

The test engine shall be installed in accordance with paragraphs 6.3 to 6.6 of Annex 4 to UN Regulation No. 49.

If auxiliaries/equipment necessary for operating the engine system are not installed as required in accordance with paragraph 6.3 of Annex 4 to UN Regulation No. 49, all measured engine torque values shall be corrected for the power required for driving these components for the purpose of this Annex in accordance with paragraph 6.3 of Annex 4 to UN Regulation No. 49.

Such corrections of engine torque and power values shall be performed if the sum of absolute values of additional or missing engine torque required for driving these engine components in a specific engine operation point exceeds the torque tolerances defined in accordance with paragraph 4.3.5.5 (1) subparagraph (b). Where such an engine component is operated in an intermittent manner, the engine torque values for driving the respective component shall be determined as average value over an appropriate period, reflecting the actual operating mode based on good engineering judgement and in agreement with the approval authority.

For the purpose of determining whether such a correction is required or not, as well as for deriving the actual values to perform the correction, the power consumption of the following engine components, resulting in the engine torque required for driving these engine components, shall be determined in accordance with Appendix 5 of this Annex:

(1) fan;

(2) electrically powered auxiliaries/equipment necessary for operating the engine system';

(7) in point 3.1.3, the second sentence is replaced by the following:

'If the crankcase is of an open type, the emissions shall be measured and added to the tailpipe emissions, following the provisions set out in paragraph 6.10 of Annex 4 to UN Regulation No. 49.';

(8) in point 3.1.4, the second paragraph is replaced by the following:

'The laboratory charge air cooling for tests according to this Regulation should comply with the provisions specified in paragraph 6.2 of Annex 4 to UN Regulation No. 49.';

(9) in point 3.1.5, subpoint (6), the first sentence is replaced by the following:

'(6) For the WHTC coldstart test performed in accordance with paragraph 4.3.3, the specific initial conditions are specified in paragraphs 7.6.1 and 7.6.2 of Annex 4 to UN Regulation No. 49.';

(10) the following point is inserted:

'3.1.6 Set up of WHR systems

The following requirements shall apply where a WHR system is present on the engine.

3.1.6.1. For parameters listed in 3.1.6.2. installation on the test bed shall not result in better performance of the WHR system related to generated power by the system as compared to the specifications for in-use installation in a vehicle. All other WHR related systems used on the test bed shall be operated under conditions which are representative for in-vehicle application at reference ambient conditions. The WHR related reference ambient conditions are defined as 293 K for air temperature and 101.3 kPa for pressure.

3.1.6.2. The engine test setup shall reflect the worst-case condition with regards to temperature and energy content transferred from excess energy to the WHR system. The following parameters have to be set to reflect the worst-case condition and need to be recorded in accordance with Figure 1a and have to be reported in the information document drawn up in accordance with the model set out in Appendix 2 of this Annex:

(a) The distance between the last after treatment system and the heat exchangers for evaporation of working fluids of WHR systems (boilers), measured in the direction downstream of the engine (L_{EW}), shall be equal to or greater than the maximum distance ($Lmax_{EW}$) specified by the manufacturer of the WHR system for in-use installation in vehicles.

(b) In the case of WHR systems with turbine(s) in the exhaust gas flow, the distance between the engine outlet and the entry into the turbine (L_{ET}) shall be equal or larger than the maximum distance ($Lmax_{ET}$) specified by the manufacturer of the WHR system for in-use installation in vehicles.

(c) For WHR systems operated in a cyclic process using a working fluid:

(i) The total pipe length between evaporator and expander (L_{HE}) shall be equal or longer than defined by the manufacturer as maximum distance for in-use installation in vehicles ($Lmax_{HE}$);

(ii) The total pipe length between expander and condenser (L_{EC}) shall be equal or shorter than defined by the manufacturer as maximum distance for in-use installation in vehicles ($Lmax_{EC}$);

(iii) The total pipe length between condenser and evaporator (L_{CE}) shall be equal or shorter than defined by the manufacturer as maximum distance for in-use installation in vehicles ($Lmax_{CE}$);

(iv) The pressure p_{cond} of the working fluid before entering the condenser shall correspond to the in-use application in vehicles at reference ambient conditions but shall in any case not be lower than the ambient pressure in the test cell minus 5 kPa, unless the manufacturer demonstrates that a lower pressure can be maintained over vehicle lifetime in-use;

(v) The cooling power on the test bed for cooling the WHR condenser shall be limited to a maximum value of $P_{cool} = k \times (t_{cond} - 20\ °C)$.

P_{cool} shall be measured either on the working fluid side or on the test bed coolant side. Where t_{cond} is defined as the condensation temperature (in °C) of the fluid at p_{cond}.

$$k = f_0 + f_1 \times V_c.$$

With: V_c is the engine displacement in litres (rounded to 2 places to the right of the decimal point)

$f_0 = 0{,}6\ kW/K$

$f_1 = 0{,}05\ kW/(K*l)$;

(vi) For cooling the WHR condenser on the test bed either liquid-cooling or air-cooling is allowed. In the case of an air-cooled condenser, the system shall be cooled with the same fan (if applicable) as installed on the vehicle and under the reference ambient conditions stated in subpoint 3.1.6.1. above. In the case of an air-cooled condenser, the limitation for cooling power stated in subpoint (v) above shall apply, where the actual cooling power shall be measured on the working fluid side of the heat condenser. Where the power for driving such a fan is provided from an external power source, the respective actual power consumed by the fan shall be considered as power delivered to the WHR system when determining the net power in accordance with subpoint (f) below.

Figure 1a

Definitions of minimum and maximum distances for WHR components for engine tests

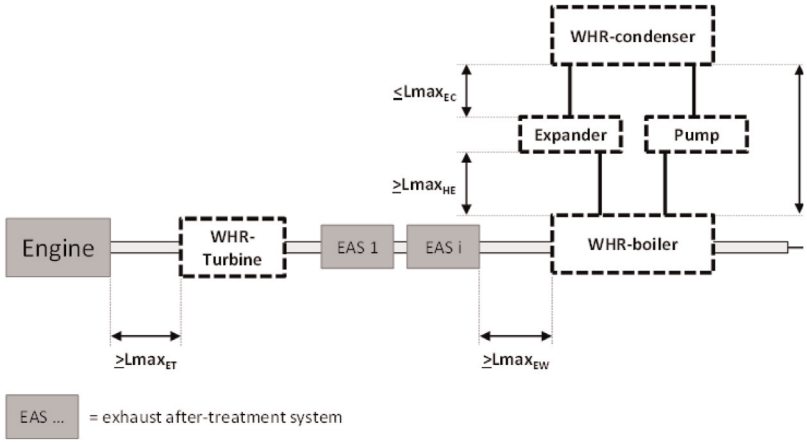

(d) Other WHR systems taking heat energy from the exhaust or cooling system shall be set up in accordance with the provisions in subpoint (c). The "evaporator" in subpoint (c) refers to the heat exchanger to transfer excess heat to the WHR device. The "expander" in subpoint (c) refers to the device converting the energy.

(e) All pipe diameters of WHR systems shall be equal or smaller than the diameters defined for in-use.

(f) For WHR_mech systems the net mechanical power shall be measured at the rotational engine speed expected at 60 km/h. If different transmission ratios are expected to be used, the rotational speed shall be calculated with the average over these transmission ratios. The mechanical or electrical power generated by a WHR system shall be measured with measurement equipment meeting the respective requirements set out in Table 2.

(i) The net electric power is the sum of the electric power delivered by the WHR system to an external power sink or rechargeable storage, minus the electric power delivered to the WHR system from an external power source or rechargeable storage. The net electric power shall be measured as DC power, i.e. after the conversion from AC to DC.

(ii) The net mechanical power is the sum of the mechanical power delivered by the WHR system to an external power sink or rechargeable storage (if applicable), minus the mechanical power delivered to the WHR system from an external power source or rechargeable storage.

(iii) All transmission systems for electrical and mechanical power necessary for the vehicle in-use shall be set up for the measurement during the engine testing (e.g. cardan shafts or belt drives for mechanical connection, AC/DC converters and DC/DC voltage transformers). If a transmission system applied in the vehicle is not part of the test set up the net electrical or mechanical power measured shall be decreased accordingly by multiplication by a generic efficiency factor for each separate transmission system. The following generic efficiencies shall be applied for transmission systems not included in the set up:

Table 1

Generic efficiencies of transmission systems for WHR power

Type of transmission	Efficiency factor for WHR power
Gear stage	0,96
Belt drive	0,92
Chain drive	0,94
DC/DC converter	0,95';

(11) in point 3.2, Table 1, last row, the text of the first column 'Natural gas / PI' is replaced by: 'Natural gas / PI or Natural Gas / CI';

(12) the following point is inserted:

'3.2.1. For dual-fuel engines the respective reference fuels for the engine systems under test shall be selected from the fuel types listed in Table 1. One of the two reference fuels shall always be B7 and the other reference fuel shall be G_{25}, G_R or LPG Fuel B.

The basic provisions stated in point 3.2 shall be applied for each of the two selected fuels separately.';

(13) in point 3.3, the first sentence is replaced by the following:

'The lubricating oil for all test runs performed in accordance with this Annex shall be a commercially available oil with unrestricted manufacturer approval under normal in-service conditions as defined in paragraph 4.2 of Annex 8 to UN Regulation No. 49.';

(14) the following point is inserted:

'3.4.1. Special requirements for dual-fuel engines

For dual-fuel engines the fuel flow in accordance with point 3.4 shall be measured for each of the two selected fuels separately.';

(15) in point 3.5, the first and second sentence are replaced by the following:

'The measurement equipment shall meet the requirements of paragraph 9 of Annex 4 to UN Regulation No. 49.

Notwithstanding the requirements defined in paragraph 9 of Annex 4 to UN Regulation No. 49, the measurement systems listed in Table 2 shall meet the limits defined in Table 2.';

(16) in point 3.5, Table 2, the following rows are added:

'Measurement system	Linearity				Accuracy (1)	Rise time (2)
	Intercept | xmin × (a1 − 1) + a0 |	Slope a1	Standard error of estimate SEE	Coefficient of determination r2		
Temperature relevant for WHR system	≤ 1,5 % max calibration (3)	0,98 - 1,02	≤ 2 % max calibration (3)	≥ 0,980	n.a.	≤ 10 s
Pressure relevant for WHR system	≤ 1,5 % max calibration(3)	0,98 - 1,02	≤ 2 % max calibration (3)	≥ 0,980	n.a.	≤ 3 s
Electrical power relevant for WHR system	≤ 2 % max calibration (3)	0,97 - 1,03	≤ 4 % max calibration (3)	≥ 0,980	n.a.	≤ 1 s
Mechanical power relevant for WHR system	≤ 1 % max calibration (3)	0,995 - 1,005	≤ 1,0 % max calibration (3)	≥ 0,99	1,0 % of reading or 0,5 % of max. calibration (3) of power whichever is larger	≤ 1 s';

(17) in point 3.5, the first and second paragraphs below Table 2 are replaced by the following:

'In the case of dual-fuel engines, the "max calibration" value applicable for the measurement system for fuel mass flow for both liquid and gaseous fuels shall be defined in accordance with the following provisions:

(1) The fuel type for which the fuel mass flow shall be determined by the measurement system subject to verification of the requirements defined in Table 2 shall be the primary fuel. The other fuel type shall be the secondary fuel.

(2) The maximum predicted value expected during all test runs for the secondary fuel shall be converted to the maximum predicted value expected during all test runs for the primary fuel by application of the following equation:

$$mf^{*}_{mp,seco} = mf_{mp,seco} \times NCV_{seco} / NCV_{prim}$$

where:

$mf^{*}_{mp,seco}$ = maximum predicted massflow value of the secondary fuel converted to the primary fuel

$mf_{mp,seco}$ = maximum predicted massflow value of the secondary fuel

NCV_{prim} = NCV of the primary fuel determined in accordance with point 3,2 [MJ/kg]

NCV_{seco} = NCV of the secondary fuel determined in accordance with point 3,2 [MJ/kg]

(3) The maximum predicted overall value, $mf_{mp,overall}$, expected during all test runs shall be determined by application of the following equation:

$$mf_{mp,overall} = mf_{mp,prim} + mf^{*}_{mp,seco}$$

where:

$mf_{mp,prim}$ = maximum predicted massflow value of the primary fuel

$mf^{*}_{mp,seco}$ = maximum predicted massflow value of the secondary fuel converted to the primary fuel

(4) The 'max calibration' values shall be 1.1 times the maximum predicted overall value, $mf_{mp,overall}$, determined in accordance with subpoint (3) above.

'x_{min}', used for calculation of the intercept value in Table 2, shall be 0,9 times the minimum predicted value expected during all test runs for the respective measurement system.

The signal delivery rate of the measurement systems listed in Table 2, except for the fuel mass flow measurement system, shall be at least 5 Hz (≥ 10 Hz recommended). The signal delivery rate of the fuel mass flow measurement system shall be at least 2 Hz.';

(18) in points 3.5.1 and 4, 'UN/ECE Regulation 49 Rev.06' is replaced by: 'UN Regulation No. 49';

(19) the following point is inserted:

'4.2.1 Special requirements for dual-fuel engines

Dual-fuel engines shall be operated in dual-fuel mode during all test runs performed in accordance with point 4.3. If a switch to service mode occurs during a test run, all recorded data during the respective test run shall be void.';

(20) in point 4.3.1, 'UN/ECE Regulation 49 Rev.06' is replaced by: 'UN Regulation No. 49';

(21) in point 4.3.2, 'UN/ECE Regulation 49 Rev.06' is replaced by: 'UN Regulation No. 49', in three instances;

(22) the following point is inserted:

'4.3.2.1 Special requirements for WHR systems

For WHR_mech and WHR_elec systems the data recording for the engine motoring curve shall not start before the reading of the value of mechanical or electrical power generated by the WHR system has stabilised within ± 10 % of its mean value for at least 10 seconds.';

(23) point 4.3.3 is replaced by the following:

'4.3.3. WHTC test

The WHTC test shall be performed in accordance with Annex 4 to UN Regulation No. 49. The weighted emission test results shall meet the applicable limits defined in Regulation (EC) No 595/2009.

Dual-fuel engines shall meet the applicable limits in accordance with Annex XVIII, point 5, to Regulation (EU) No 582/2011.

The engine full load curve recorded in accordance with paragraph 4.3.1 shall be used for the denormalisation of the reference cycle and all calculations of reference values performed in accordance with paragraphs 7.4.6, 7.4.7 and 7.4.8 of Annex 4 to UN Regulation No. 49.';

(24) in point 4.3.3.1, 'UN/ECE Regulation 49 Rev.06' is replaced by: 'UN Regulation No. 49';

(25) the following point is inserted:

'4.3.3.2 Special requirements for WHR systems

For WHR_mech systems the mechanical P_WHR_net and for WHR_elec systems the electrical P_WHR_net in accordance with point 3.1.6 shall be recorded.';

(26) point 4.3.4 is replaced by the following:

'4.3.4. WHSC test

The WHSC test shall be performed in accordance with Annex 4 to UN Regulation No. 49. The emission test results shall meet the applicable limits defined in Regulation (EC) No 595/2009.

Dual-fuel engines shall meet the applicable limits in accordance with Annex XVIII, point 5, to Regulation (EU) No 582/2011.

The engine full load curve recorded in accordance with point 4.3.1 shall be used for the denormalisation of the reference cycle and all calculations of reference values performed in accordance with paragraphs 7.4.6, 7.4.7 and 7.4.8 of Annex 4 to UN Regulation No. 49.';

(27) in point 4.3.4.1, 'UN/ECE Regulation 49 Rev.06' is replaced by: 'UN Regulation No. 49';

(28) the following point is inserted:

'4.3.4.2 Special requirements for WHR systems

For WHR_mech systems the mechanical P_WHR_net and for WHR_elec systems the electrical P_WHR_net in accordance with point 3.1.6 shall be recorded.';

(29) in point 4.3.5.1, 'UN/ECE Regulation 49 Rev.06' is replaced by: 'UN Regulation No. 49';

(30) in points 4.3.5.1.1 and 4.3.5.2.1 'UN/ECE Regulation 49 Rev.06' is replaced by: 'UN Regulation No. 49', in four instances;

(31) in point 4.3.5.2.2, second paragraph, the first sentence is replaced by the following:

'All target torque setpoints at a particular target engine speed setpoint that exceed the limit value defined by the full load torque value (determined from the engine full load curve recorded in accordance with point 4.3.1) at this particular target engine speed setpoint minus 5 % of $T_{max_overall}$, shall be replaced by one single target torque setpoint at full load torque at this particular target engine speed setpoint.';

(32) in point 4.3.5.3, 'UN/ECE Regulation 49 Rev.06' is replaced by: 'UN Regulation No. 49', in three instances;

(33) in point 4.3.5.3, subpoint (4), the second sentence is replaced by the following: 'Particulate pollutants, methane and ammonia emissions are not required to be monitored during the FCMC test run.';

(34) the following point is inserted:

'4.3.5.3.1 Special requirements for WHR systems

For WHR_mech systems the mechanical P_WHR_net and for WHR_elec systems the electrical P_WHR_net in accordance with point 3.1.6 shall be recorded.';

(35) in point 4.3.5.4, in both the first and second paragraphs, 'UN/ECE Regulation 49 Rev.06' is replaced by: 'UN Regulation No. 49';

(36) in point 4.3.5.4, the third paragraph is replaced by:

'The engine full load curve of the CO_2-parent engine of the engine CO_2-family recorded in accordance with point 4.3.1 shall be used for the denormalisation of the reference values of mode 9 performed in accordance with paragraphs 7.4.6, 7.4.7 and 7.4.8 of Annex 4 to UN Regulation No. 49.';

(37) in point 4.3.5.5, fourth paragraph, subpoint (1), the second sentence is replaced by the following:

'During the following period of 30±1 seconds the engine shall be controlled as follows:';

(38) in point 4.3.5.5, fourth paragraph, subpoint (3) is replaced by the following:

'(3) After the zero torque setpoint has been measured in subpoint (1), the target engine speed shall be decreased linearly to the next lower target engine speed setpoint while at the same time the operator demand shall be increased linearly to the maximum value within 20 to 46 seconds. If the next target setpoint is reached within less than 46 seconds, the remaining time up to 46 seconds shall be used for stabilisation. Then the measurement shall be performed by starting the stabilisation procedure in accordance with subpoint (1) and afterwards the target torque setpoints at constant target engine speed shall be adjusted in accordance with subpoint (2).';

(39) in point 4.3.5.6, 'UN/ECE Regulation 49 Rev.06' is replaced by: 'UN Regulation No. 49';

(40) in point 4.3.5.6.2, second paragraph, subpoints (2) and (3) are replaced by the following:

'(2) 2 vertical lines spaced at equal distance between engine speeds n_{30} and n_{hi} for 9 cell grids, or 3 vertical lines spaced at equal distance between engine speeds n_{30} and n_{hi} for 12 cell grids.

(3) 2 lines spaced at equal distance of engine torque (i.e. 1/3) at each vertical line within the control area defined in accordance with point 4.3.5.6.1.';

(41) in point 4.3.5.6.3, the second paragraph is replaced by the following:

'The specific mass emissions of the single engine speed and torque points measured during the FCMC shall be determined as averaged value over the 30±1 seconds measurement period defined in accordance with point 4.3.5.5., subpoint (1)';

(42) in points 4.3.5.6.3 and 4.3.5.7.1, 'UN/ECE Regulation 49 Rev.06' is replaced by: 'UN Regulation No. 49', in five instances;

(43) point 4.3.5.7.2 is replaced by the following:

'4.3.5.7.2 Requirements for emission monitoring

The data obtained from the FCMC tests is valid if the specific mass emissions of the regulated gaseous pollutants determined for each grid cell in accordance with point 4.3.5.6.3 meet the following limits for gaseous pollutants:

(a) Engines other than dual-fuel shall meet the applicable limit values in accordance with paragraph 5.2.2 of Annex 10 to UN Regulation 49.

(b) Dual-fuel engines shall meet the applicable limits defined in Annex XVIII to Regulation (EU) No 582/2011, where reference to a pollutant emission limit defined in Annex I to Regulation (EU) 595/2009 shall be replaced by reference to the limit of the same pollutant in accordance with paragraph 5.2.2 of Annex 10 to UN/ECE Regulation 49.

In the case that the number of engine speed and torque points within the same grid cell is less than 3, this point shall not apply for that specific grid cell.';

(44) in point 5.1, 'UN/ECE Regulation 49 Rev.06' is replaced by: 'UN Regulation No. 49';

(45) the following point is inserted:

'5.3.1.1 Special requirements for dual-fuel engines

For dual-fuel engines the specific fuel consumption figures for WHTC correction factor in accordance with point 5.3.1 shall be calculated for each of the two fuels separately.';

(46) the following point is inserted:

'5.3.2.1 Special requirements for dual-fuel engines

For dual-fuel engines the specific fuel consumption figures for cold-hot emission balancing factor in accordance with point 5.3.2 shall be calculated for each of the two fuels separately.';

(47) point 5.3.3 is replaced by the following:

'5.3.3. Specific fuel consumption figures over WHSC

The specific fuel consumption over the WHSC shall be calculated from the actual measured values for the WHSC recorded in accordance with point 4.3.4 as follows:

$$SFC_{WHSC} = (\Sigma\ FC_{WHSC}) / (W_{WHSC} + \Sigma\ E_WHR_{WHSC})$$

where:

SFC_{WHSC} = Specific fuel consumption over WHSC [g/kWh]

$\Sigma\ FC_{WHSC}$ = Total fuel consumption over the WHSC [g]

determined in accordance with point 5.2 of this Annex

W_{WHSC} = Total engine work over the WHSC [kWh]

dddetermined in accordance with point 5.1 of this Annex

For engines with more than one WHR system installed E_WHR_{WHSC} shall be calculated for each different WHR system separately. For engines without a WHR system installed E_WHR_{WHSC} shall be set to zero.

E_WHR_{WHSC} = Total integrated E_WHR_net over the WHSC [kWh]

determined in accordance with point 5.3

$\Sigma\ E_WHR_{WHSC}$ = Sum of individual E_WHR_{WHSC} of all different WHR systems installed [kWh].';

(48) in point 5.3.3.1, Table 4, first column, the text in the last row 'Natural gas / PI' is replaced by: 'Natural gas / PI or Natural Gas / CI';

(49) the following point is inserted:

'5.3.3.3 Special requirements for dual-fuel engines

For dual-fuel engines the corrected specific fuel consumption figures over the WHSC in accordance with point 5.3.3.1 shall be calculated for each of the two fuels separately from the respective specific fuel consumption figures over the WHSC determined for each of the two fuels separately in accordance with point 5.3.3.

Point 5.3.3.2 shall apply for Diesel fuel B7.';

(50) in point 5.4, 'UN/ECE Regulation 49 Rev.06' is replaced by: 'UN Regulation No. 49', in six instances;

(51) the following points are inserted:

'5.4.1 Special requirements for dual-fuel engines

For dual-fuel engines the correction factor for engines equipped with exhaust after-treatment systems that are regenerated on a periodic basis in accordance with point 5.4 shall be calculated for each of the two fuels separately.

5.5 Special provisions for WHR systems

The values in subpoints 5.5.1, 5.5.2 and 5.5.3 shall only be calculated where a WHR_mech or WHR_elec system is present in the test setup. The respective values shall be calculated for mechanical and electrical net power separately.

5.5.1 Calculation of integrated E_WHR_net

This paragraph shall only apply to engines with WHR systems.

Any recorded negative values for the mechanical or electrical P_WHR_net shall be used directly and shall not be set equal to zero for the calculations of the integrated value.

The total integrated E_WHR_net over a complete testcycle or over each WHTC-sub-cycle shall be determined by integrating recorded values of mechanical or electrical P_WHR_net in accordance with the following formula:

$$E_WHR_{meas,i} = \left(\tfrac{1}{2}P_WHR_{meas,0} + P_WHR_{meas,1} + P_WHR_{meas,2} + \ldots + P_WHR_{meas,n-2} + P_WHR_{meas,n-1} + \frac{1}{2}P_WHR_{meas,n}\right)h$$

where:

$E_WHR_{meas,\ i}$ = total integrated E_WHR_net over the time period from t_0 to t_1

t_0 = time at the start of the time period

t_1 = time at the end of the time period

n = number of recorded values over the time period from t_0 to t_1

$P_WHR_{meas,k\ [0\ \ldots\ n]}$ = recorded mechanical or electrical P_WHR_net value at the moment $t_0 + k \times h$, over the time period from t_0 to t_1 in chronological order, where k runs from 0 at t_0 to n at t_1

$h = \frac{t_1 - t_0}{n}$ h = interval width between two adjacent recorded values

5.5.2 Calculation of specific E_WHR_net figures

The correction and balancing factors, which have to be provided as input for the simulation tool, are calculated by the engine pre-processing tool based on the measured specific E_WHR_net figures determined in accordance with points 5.5.2.1 and 5.5.2.2.

5.5.2.1 Specific E_WHR_net figures for WHTC correction factor

The specific E_WHR_net figures needed for the WHTC correction factor shall be calculated from the actual measured values for the hotstart WHTC recorded in accordance with point 4.3.3 as follows:

$$S_E_WHR_{meas,\ Urban} = E_WHR_{meas,\ WHTC\text{-}Urban} \ / \ W_{act,\ WHTC\text{-}Urban}$$

$$S_E_WHR_{meas,\ Rural} = E_WHR_{meas,\ WHTC\text{-}\ Rural} \ / \ W_{act,\ WHTC\text{-}\ Rural}$$

$$S_E_WHR_{meas,\ MW} = E_WHR_{meas,\ WHTC\text{-}MW} \ / \ W_{act,\ WHTC\text{-}MW}$$

where:

$S_E_WHR_{meas,\ i}$ = Specific E_WHR_net over the WHTC-sub-cycle i [kJ/kWh]

$E_WHR_{meas,\ i}$ = Total integrated E_WHR_net over the WHTC-sub-cycle i [kJ] determined in accordance with point 5.5.1

$W_{act,\ i}$ = Total engine work over the WHTC sub-cycle i [kWh] determined in accordance with point 5.1

The 3 different sub-cycles of the WHTC (urban, rural and motorway) as defined in point 5.3.1.

5.5.2.2 Specific E_WHR_net figures for cold-hot emission balancing factor

The specific E_WHR_net figures needed for the cold-hot emission balancing factor shall be calculated from the actual measured values for both the hotstart and coldstart WHTC test recorded in accordance with point 4.3.3. The calculations shall be performed for both the hotstart and coldstart WHTC separately as follows:

$$S_E_WHR_{meas,\ hot} = E_WHR_{meas,\ hot} \ / \ W_{act,\ hot}$$

$$S_E_WHR_{meas,\ cold} = E_WHR_{meas,\ cold} \ / \ W_{act,\ cold}$$

where:

$S_E_WHR_{meas,\ j}$ = Specific E_WHR_net over the WHTC [kJ/kWh]

$E_WHR_{meas,\ j}$ = Total integrated E_WHR_net over the WHTC [kJ]

determined in accordance with point 5.5.1

$W_{act,\ j}$ = Total engine work over the WHTC [kWh]

determined in accordance with point 5.1

5.5.3 WHR correction factor for engines equipped with exhaust after-treatment systems that are regenerated on a periodic basis

This correction factor shall be set to 1.';

(52) point 6.1.4 is replaced by the following:

'6.1.4 Fuel consumption map of the CO_2-parent engine

The input data shall be the values determined for the CO_2-parent engine of the engine CO_2-family defined in accordance with Appendix 3 of this Annex and recorded in accordance with point 4.3.5.

In the case that upon request of the manufacturer the provisions defined in Article 15(5) of this Regulation are applied, the values determined for that specific engine recorded in accordance with point 4.3.5 shall be used as input data.

The input data shall only consist of the average measurement values over the 30±1 seconds measurement period determined in accordance with subpoint (1) of point 4.3.5.5.

The input data shall be provided in the file format of "comma separated values" with the separator character being the Unicode Character "COMMA" (U+002C) (","). The first line of the file shall be used as a heading and not contain any recorded data. The recorded data shall start from the second line of the file.

The heading of each column in the first line of the file defines the expected content of the respective column.

The column for engine speed shall have the string "engine speed" as heading in the first line of the file. The data values shall start from the second line of the file in min^{-1} rounded to 2 places to the right of the decimal point in accordance with ASTM E 29-06.

The column for torque shall have the string "torque" as heading in the first line of the file. The data values shall start from the second line of the file in Nm rounded to 2 places to the right of the decimal point in accordance with ASTM E 29-06.

The column for fuel massflow shall have the string "massflow fuel 1" as heading in the first line of the file. The data values shall start from the second line of the file in g/h rounded to 2 places to the right of the decimal point in accordance with ASTM E 29-06.';

(53) the following points are inserted:

'6.1.4.1 Special requirements for dual-fuel engines

The column for fuel massflow of the second fuel measured shall have the string "massflow fuel 2" as heading in the first line of the file. The data values shall start from the second line of the file in g/h rounded to 2 places to the right of the decimal point in accordance with ASTM E 29-06.

6.1.4.2 Special requirements for engines equipped with a WHR system

Where the WHR system is of the type "WHR_mech" or "WHR_elec", the input data shall be extended with the values for the mechanical P_WHR_net for WHR_mech systems or with the values for the electrical P_WHR_net for WHR_elec systems recorded in accordance with point 4.3.5.3.1.

The column for the mechanical P_WHR_net shall have the string "WHR mechanical power" and the column for the electrical P_WHR_net shall have the string "WHR electrical power" as heading in the first line of the file. The data values shall start from the second line of the file in W rounded to the nearest whole number in accordance with ASTM E 29-06.';

(54) the following point is inserted:

'6.1.5.1 Special requirements for dual-fuel engines

The three values determined in accordance with point 6.1.5 corresponding to the respective fuel type used as input for the column 'massflow fuel 1' in accordance with point 6.1.4 shall be the input data under the tab 'Fuel 1' in the GUI.

The three values determined in accordance with point 6.1.5 corresponding to the respective fuel type used as input for the column 'massflow fuel 2' in accordance with point 6.1.4.1 shall be the input data under the tab 'Fuel 2' in the GUI.';

(55) the following point is inserted:

'6.1.6.1 Special requirements for dual-fuel engines

The values determined in accordance with point 6.1.6 corresponding to the respective fuel type used as input for the column 'massflow fuel 1' in accordance with point 6.1.4 shall be the input data under the tab 'Fuel 1' in the GUI.

The values determined in accordance with point 6.1.6 corresponding to the respective fuel type used as input for the column 'massflow fuel 2' in accordance with point 6.1.4.1 shall be the input data under the tab 'Fuel 2' in the GUI.';

(56) the following point is inserted:

'6.1.7.1 Special requirements for dual-fuel engines

The values determined in accordance with point 6.1.7 corresponding to the respective fuel type used as input for the column 'massflow fuel 1' in accordance with point 6.1.4 shall be the input data under the tab 'Fuel 1' in the GUI.

The values determined in accordance with point 6.1.7 corresponding to the respective fuel type used as input for the column 'massflow fuel 2' in accordance with point 6.1.4.1 shall be the input data under the tab 'Fuel 2' in the GUI.';

(57) the following point is inserted:

'6.1.8.1 Special requirements for dual-fuel engines

The value determined in accordance with point 6.1.8 corresponding to the respective fuel type used as input for the column 'massflow fuel 1' in accordance with point 6.1.4 shall be the input data under the tab 'Fuel 1' in the GUI.

The value determined in accordance with point 6.1.8 corresponding to the respective fuel type used as input for the column 'massflow fuel 2' in accordance with point 6.1.4.1 shall be the input data under the tab 'Fuel 2' in the GUI.';

(58) the following point is inserted:

'6.1.9.1 Special requirements for dual-fuel engines

The type of the test fuel corresponding to the respective fuel type used as input for the column 'massflow fuel 1' in accordance with point 6.1.4 shall be the input data under the tab 'Fuel 1' in the GUI.

The type of the test fuel corresponding to the respective fuel type used as input for the column 'massflow fuel 2' in accordance with point 6.1.4.1 shall be the input data under the tab 'Fuel 2' in the GUI.';

(59) point 6.1.17 is replaced by the following:

'6.1.17. Certification Number

The input data shall be the certification number of the engine as a sequence of characters in ISO8859-1 encoding.';

(60) the following points are added:

‘6.1.18 Dual-fuel

In the case of a dual-fuel engine, the checkbox “Dual-fuel” in the GUI shall be set to active.

6.1.19 WHR_no_ext

In the case of an engine with a WHR_no_ext system, the checkbox “MechanicalOutputICE” in the GUI shall be set to active.

6.1.20 WHR_mech

In the case of an engine with a WHR_mech system, the checkbox “MechanicalOutputDrivetrain” in the GUI shall be set to active.

6.1.21 WHR_elec

In the case of an engine with a WHR_elec system, the checkbox “ElectricalOutput” in the GUI shall be set to active.

6.1.22 Specific E_WHR_net figures for WHTC correction factor for WHR_mech systems

In the case of an engine with a WHR_mech system, the input data shall be the three values for specific E_WHR_net over the different sub-cycles of the WHTC – urban, rural and motorway – in kJ/kWh determined in accordance with point 5.5.2.1.

The values shall be rounded to 2 places to the right of the decimal point in accordance with ASTM E 29-06 and shall be the input under the respective fields in the tab “WHR Mechanical” in the GUI.

6.1.23 Specific E_WHR_net figures for cold-hot emission balancing factor for WHR_mech systems

In the case of an engine with a WHR_mech system, the input data shall be the two values for specific E_WHR_net over the hotstart and coldstart WHTC in kJ/kWh determined in accordance with point 5.5.2.2.

The values shall be rounded to 2 places to the right of the decimal point in accordance with ASTM E 29-06 and shall be the input under the respective fields in the tab “WHR Mechanical” in the GUI.

6.1.24 Specific E_WHR_net figures for WHTC correction factor for WHR_elec systems

In the case of an engine with a WHR_ elec system, the input data shall be the three values for specific E_WHR_net over the different sub-cycles of the WHTC – urban, rural and motorway – in kJ/kWh determined in accordance with point 5.5.2.1.

The values shall be rounded to 2 places to the right of the decimal point in accordance with ASTM E 29-06 and shall be the input under the respective fields in the tab "WHR Electrical" in the GUI.

6.1.25 Specific E_WHR_net figures for cold-hot emission balancing factor for WHR_ elec systems

In the case of an engine with a WHR_ elec system, the input data shall be the two values for specific E_WHR_net over the hotstart and coldstart WHTC in kJ/kWh determined in accordance with point 5.5.2.2.

The values shall be rounded to 2 places to the right of the decimal point in accordance with ASTM E 29-06 and shall be the input under the respective fields in the tab "WHR Electrical" in the GUI.

6.1.26 WHR correction factor for engines equipped with exhaust after-treatment systems that are regenerated on a periodic basis

The input data shall be the correction factor determined in accordance with point 5.5.3.

The value shall be rounded to 2 places to the right of the decimal point in accordance with ASTM E 29-06 and shall be the input under the respective field in the tab "WHR Electrical" for an engine with a WHR_ elec system and in the tab "WHR Mechanical" for an engine with a WHR_mech system in the GUI.';

(61) in Appendix 2, Part 1, the following points are inserted:

'3.2.1.1.1.	Type of dual-fuel engine: Type 1A/Type 1B/Type 2A/Type 2B/Type 3B[1]						
3.2.1.1.2.	Gas Energy Ratio over the hot part of the WHTC: %'						

(62) in Appendix 2, Part 1, the following point is inserted:

'3.2.1.6.2.	Idle on Diesel: yes/no[1]'						

(63) in Appendix 2, Part 1, point 3.2.1.11 is replaced by the following:

'3.2.1.11.	Manufacturer references of the documentation package required by paragraphs 3.1, 3.2 and 3.3 of UN Regulation No. 49 enabling the Type Approval Authority to evaluate the emission control strategies and the systems on-board the engine to ensure the correct operation of NO_x control measures'						

(64) in Appendix 2, Part 1, point 3.2.2.2.1 is replaced by the following:

'3.2.2.2.1.	Fuels compatible with use by the engine declared by the manufacturer in accordance with paragraph 4.6.2 of UN Regulation No. 49 (as applicable)'						

(65) in Appendix 2, Part 1, point 3.2.4.2 is replaced by the following:

'3.2.4.2.	By fuel injection (only compression ignition or dual-fuel): Yes/No ([1])'						

(66) in Appendix 2, Part 1, point 3.2.12.1.1 is replaced by the following:

'3.2.12.1.1.	Device for recycling crankcase gases: Yes/No ([1]) If yes, description and drawings If no, compliance with paragraph 6.10 of Annex 4 to UN Regulation No. 49 required'						

(67) in Appendix 2, Part 1, point 3.2.12.2.7 is replaced by the following:

'3.2.12.2.7.	If applicable, manufacturer's reference to the documentation for installing the dual-fuel engine in a vehicle';						

(68) in Appendix 2, Part 1, points 3.2.12.2.7.0.1 to 3.2.12.2.8.7 are deleted;

(69) in Appendix 2, Part 1, point 3.2.17 is replaced by the following:

'3.2.17.	Specific information related to gas fuelled engines and dual-fuel engines for heavy-duty vehicles (in the case of systems laid out in a different manner, supply equivalent information)';						

(70) in Appendix 2, Part 1, point 3.5.5 is replaced by the following:

'3.5.5.	Specific fuel consumption, specific CO_2 emissions and correction factors';						

(71) in Appendix 2, Part 1, points 3.5.5.1. to 3.5.5.8., second column, end of the text, a table note '([9])' is inserted;

(72) in Appendix 2, Part 1, the following point is inserted:

'3.5.5.2.1.	For dual-fuel engines: Specific CO_2 emissions over the WHSC in accordance with point 6.1 of Appendix 4 g/kWh ([9])'						

(73) in Appendix 2, Part 1, the following points are added:

'3,9	WHR System						
3.9.1	Type of WHR system: WHR_no_ext, WHR_mech, WHR_elec						
3.9.2	Operation principle						
3.9.3	Description of the system						
3.9.4	Evaporator type ([10])						
3.9.5	L_{EW} in accordance with 3.1.6.2(a)						
3.9.6	$Lmax_{EW}$ in accordance with 3.1.6.2(a)						
3.9.7	Turbine type						
3.9.8	L_{ET} in accordance with 3.1.6.2(b)						
3.9.9	$Lmax_{ET}$ in accordance with 3.1.6.2(b)						
3.9.10	Expander type						
3.9.11	L_{HE} in accordance with 3.1.6.2(c)(i)						
3.9.12	$Lmax_{HE}$ in accordance with 3.1.6.2(c)(i)						
3.9.13	Condenser type						
3.9.14	L_{EC} in accordance with 3.1.6.2(c)(ii)						
3.9.15	$Lmax_{EC}$ in accordance with 3.1.6.2(c)(ii)						
3.9.16	L_{CE} in accordance with 3.1.6.2(c)(iii)						
3.9.17	$Lmax_{CE}$ in accordance with 3.1.6.2(c)(iii)						
3.9.18	Rotational speed at which the net mechanical power was measured for WHR_mech systems in accordance with 3.1.6.2(f)';						

(74) in Appendix 2, Part 1, the following table notes are added:

'([9]) For dual-fuel engines indicate values for each fuel type and each operation mode separately.

([10]) For other WHR systems this shall reflect the heat exchanger type in accordance with 3.1.6.2(d).';

(75) in Appendix 2, Appendix to information document, point 4 is replaced by the following:

'4. Test fuel used (*)

(*) For dual-fuel engines indicate values for each fuel type and each operation mode separately;'

(76) in Appendix 2, Appendix to information document, Table 1, both rows, the text 'UN/ECE Regulation 49 Rev.06' is replaced by: 'UN Regulation No. 49';

(77) in Appendix 2, Appendix to information document, point 6.1., the first sentence is replaced by the following:

'Engine test speeds for emissions test (for dual-fuel engines performed in dual-fuel mode) in accordance with Annex 4 to UN Regulation No. 49([1])';

(78) in Appendix 2, Appendix to information document, point 6.2 is replaced by the following:

'6.2. Declared values for power test (for dual-fuel engines performed in dual-fuel mode) in accordance with UN Regulation No. 85 (*)

(*) Regulation No 85 of the Economic Commission for Europe of the United Nations (UN/ECE) – Uniform provisions concerning the approval of internal combustion engines or electric drive trains intended for the propulsion of motor vehicles of categories M and N with regard to the measurement of net power and the maximum 30 minutes power of electric drive trains (OJ L 323, 7.11.2014, p. 52)';

(79) in Appendix 3, point 1 is replaced by the following:

'1. Parameters defining the engine CO_2-family

The engine CO_2-family, as determined by the manufacturer, shall comply with the membership criteria defined in accordance with paragraph 5.2.3 of Annex 4 to UN Regulation No. 49. An engine CO_2-family may consist of only one engine.

In the case of a dual-fuel engine, the engine CO_2-family shall also comply with the additional requirements of paragraph 3.1.1 of Annex 15 to UN Regulation No. 49.

In addition to those membership criteria, the engine CO_2-family, as determined by the manufacturer, shall comply with the membership criteria listed in points 1.1 to 1.10.

In addition to the parameters listed in points 1.1 to 1.10, the manufacturer may introduce additional criteria allowing the definition of families of more restricted size. These parameters are not necessarily parameters that have an influence on the level of fuel consumption.';

(80) in Appendix 3, point 1.5 is replaced by the following:

'1.5. Waste heat recovery system(s)';

(81) in Appendix 3, the following points are inserted:

'1.5.1 Type of WHR system(s) (defined in accordance with point 2 of this Annex)

1.5.2 Setup of WHR system for testing in accordance with point 3.1.6 of this Annex

1.5.3 Type of turbine of WHR system(s)

1.5.4 Type of evaporator of WHR system(s)

1.5.5 Type of expander of WHR system(s)

1.5.6 Type of condenser of WHR system(s)

1.5.7 Type of pump of WHR system(s)

1.5.8 L_{EW} in accordance with 3.1.6.2(a) of this Annex for all other engines within the same CO_2-family shall be equal or higher than for the CO_2-parent engine

1.5.9 L_{ET} in accordance with 3.1.6.2(b) of this Annex for all other engines within the same CO_2-family shall be equal or higher than for the CO_2-parent engine

1.5.10 L_{HE} in accordance with 3.1.6.2(c)(i) of this Annex for all other engines within the same CO_2-family shall be equal or higher than for the CO_2-parent engine

1.5.11 L_{EC} in accordance with 3.1.6.2(c)(ii) of this Annex for all other engines within the same CO_2-family shall be equal or smaller than for the CO_2-parent engine

1.5.12 L_{CE} in accordance with 3.1.6.2(c)(iii) of this Annex for all other engines within the same CO_2-family shall be equal or smaller than for the CO_2-parent engine

1.5.13 p_{cond} in accordance with 3.1.6.2(c)(iv) of this Annex for all other engines within the same CO_2-family shall be equal or higher than for the CO_2-parent engine

1.5.14 P_{cool} in accordance with 3.1.6.2(c)(v) of this Annex for all other engines within the same CO_2-family shall be equal or higher than for the CO_2-parent engine';

(82) in Appendix 3, point 1.7.3 is replaced by the following:

'1.7.3. Torque values within a tolerance band related to the reference described in points 1.7.1 and 1.7.2 are considered as equal. The tolerance band is defined as + 40 Nm or + 4 % of the CO_2 parent engine torque at the particular engine speed, whichever is greater.';

(83) in Appendix 3, point 1.8.2, the text 'UN/ECE Regulation 49 Rev.06' is replaced by: 'UN Regulation No. 49';

(84) in Appendix 3, the following points are inserted:

'1.10. Variation in GER_{WHTC}

1.10.1. For dual-fuel engines, the difference between the highest and the lowest GER_{WHTC}

(i.e. the highest GER_{WHTC} minus the lowest GER_{WHTC}) within the same CO_2-family shall not exceed 10 %.';

(85) in Appendix 4, point 5.3.(b) is replaced by the following:

'(b) newly produced engine, with the determination of an evolution coefficient as follows:

A. The fuel consumption shall be measured over the WHSC test, performed in accordance with point 4 of this Appendix, once on the newly manufactured engine with a maximum run-in time of 15 hours in accordance with point 5.1 of this Appendix and in the second test before the maximum of 125 hours set in point 5.2 of this Appendix on the first engine tested.

B. The specific fuel consumption over the WHSC, SFC_{WHSC}, shall be determined in accordance with point 5.3.3 of this Annex from the values measured in point (A) of this point.

C. The values for the specific fuel consumption of both tests shall be adjusted to a corrected value in accordance with points 7.2, 7.3 and 7.4 of this Appendix for the respective fuel used during each of the two tests.

D. The evolution coefficient shall be calculated by dividing the corrected specific fuel consumption of the second test by the corrected specific fuel consumption of the first test. The evolution coefficient may have a value less than one.

E. For dual-fuel engines point D. above shall not apply. Instead, the evolution coefficient shall be calculated by dividing the specific CO_2 emissions of the second test by the specific CO_2 emissions of the first test. The two values for specific CO_2 emissions shall be determined in accordance with the provisions stated in point 6.1 of this Appendix using the two values of $SFC_{WHSC,corr}$ determined in accordance with sub-subpoint C. above. The evolution coefficient may have a value less than one.';

(86) in Appendix 4, points 5.4, 5.5 and 5.6 are replaced by the following:

'5.4. If the provisions defined in point 5.3(b) of this Appendix are applied, the subsequent engines selected for testing of conformity of CO_2 emissions and fuel consumption related properties shall not be subjected to the running-in procedure, but their specific fuel consumption over the WHSC or specific CO_2 emissions over the WHSC in the case of dual-fuel engines determined on the newly manufactured engine with a maximum run-in time of 15 hours in accordance with point 5.1 of this Appendix shall be multiplied by the evolution coefficient.

5.5. In the case described in point 5.4 of this Appendix the values for the specific fuel consumption over the WHSC or specific CO_2 emissions over the WHSC in the case of dual-fuel engines to be taken shall be the following:

(a) for the engine used for determination of the evolution coefficient in accordance with point 5.3 (b) of this Appendix, the value from the second test

(b) for the other engines, the values determined on the newly manufactured engine with a maximum run-in time of 15 hours in accordance with point 5.1 of this Appendix multiplied by the evolution coefficient determined in accordance with point 5.3 (b)(D) of this Appendix or point 5.3 (b)(E) of this Appendix in the case of dual-fuel engines.

5.6. Instead of using a running-in procedure in accordance with points 5.2 to 5.5 of this Appendix, a generic evolution coefficient of 0,99 may be used at the request of the manufacturer. In this case the specific fuel consumption over the WHSC or specific CO_2 emissions over the WHSC in the case of dual-fuel engines determined on the newly manufactured engine with a maximum run-in time of 15 hours in accordance with point 5.1 of this Appendix shall be multiplied by the generic evolution coefficient of 0,99.';

(87) in Appendix 4, point 5.7., the text 'UN/ECE Regulation 49 Rev.06' is replaced by: 'UN Regulation No. 49' in two instances;

(88) In Appendix 4 the following point is inserted:

'6.1. Special requirements for dual-fuel engines

For dual-fuel engines, the target value to assess the conformity of the certified CO_2 emissions and fuel consumption related properties shall be calculated from the two separate values for each fuel of the corrected specific fuel consumption over the WHSC, $SFC_{WHSC,corr}$, in g/kWh determined in accordance with point 5.3.3. Each of the two separate values for each fuel shall be multiplied by the respective CO_2 emission factor for each fuel in accordance with Table 1 of this Appendix. The sum of the two resulting values of specific CO_2 emissions over the WHSC defines the applicable target value to assess the conformity of the certified CO_2 emissions and fuel consumption related properties of dual-fuel engines.

Table 1

CO_2 emission factors of fuel types

Fuel type / engine type	Reference fuel type	CO_2 emission factors [g CO_2/g fuel]
Diesel / CI	B7	3,13
LPG / PI	LPG Fuel B	3,02
Natural Gas / PI or Natural Gas / CI	G_{25} or G_R	2,73'

(89) in Appendix 4, point 7.3 is replaced by the following:

'7.3. If reference fuel was used during testing in accordance with point 1.4 of this Appendix the special provisions defined in point 5.3.3.2 of this Annex shall be applied to the value determined in point 7.1 of this Appendix to calculate the corrected value, $SFC_{WHSC,corr}$.';

(90) in Appendix 4, the following point is inserted:

'7.3.a For dual-fuel engines the special provisions defined in point 5.3.3.3 of this Annex shall be applied in addition to points 7.2 and 7.3 to the value determined in point 7.1 of this Appendix to calculate the corrected value, $SFC_{WHSC,corr}$.';

(91) in Appendix 4, the following points are inserted:

'7.5. The actual value for assessment of conformity of the certified CO_2 emissions and fuel consumption related properties is the corrected specific fuel consumption over the WHSC, $SFC_{WHSC,corr}$, determined in accordance with points 7.2 and 7.3.

7.6 For dual-fuel engines point 7.5 shall not apply. Instead, the actual value for assessment of conformity of the certified CO_2 emissions and fuel consumption related properties is the sum of the two resulting values of specific CO_2 emissions over the WHSC determined in accordance with the provisions stated in point 6.1 of this Appendix using the two values of $SFC_{WHSC,corr}$ determined in accordance with point 7.4 of this Appendix.';

(92) in Appendix 4, point 8, the second paragraph is replaced by the following:

'For gas and dual-fuel engines, the limit values for the assessment of conformity of one single engine tested shall be the target value determined in accordance with point (6) + 5 %.';

(93) in Appendix 4, point 9.1. is replaced by the following:

'9.1 The emission test results over the WHSC determined in accordance with point 7.4 of this Appendix shall meet the following limit values for all gaseous pollutants except ammonia, otherwise the test shall be considered void for the assessment of conformity of the certified CO_2 emissions and fuel consumption related properties:

(a) applicable limit values defined in Annex I to Regulation (EC) No 595/2009

(b) dual-fuel engines shall meet the applicable limits defined in point 5 of Annex XVIII to Regulation (EU) No 582/2011';

(94) in Appendix 4, points 9.3.(a). and (b), the text 'UN/ECE Regulation 49 Rev.06' is replaced by: 'UN Regulation No. 49';

(95) in Appendix 5, point 1, first paragraph, point (ii), the text 'UN/ECE Regulation 49 Rev.06' is replaced by: 'UN Regulation No. 49';

(96) in Appendix 6, points 1.4 and 1.4.1 are replaced by the following:

'1.4. The certification mark shall also include in the vicinity of the rectangle the "base approval number" as specified for Section 4 of the type-approval number set out in Annex I to Implementing Regulation (EU) 2020/683, preceded by the two figures indicating the sequence number assigned to the latest technical amendment to this Regulation and by a character "E" indicating that the approval has been granted for an engine.

For this Regulation, the sequence number shall be 02.

1.4.1. Example and dimensions of the certification mark (separate marking)

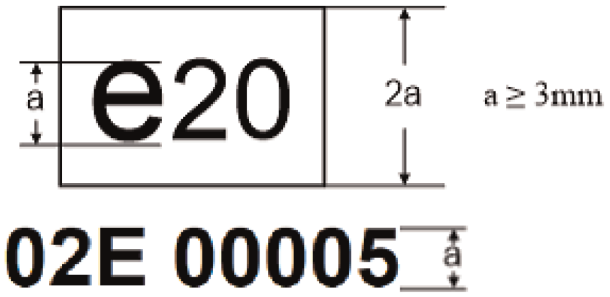

The above certification mark affixed to an engine shows that the type concerned has been certified in Poland (e20), pursuant to this Regulation. The first two digits (02) indicate the sequence number assigned to the latest technical amendment to this Regulation. The following letter indicates that the certificate was granted for an engine (E). The last five digits (00005) are those allocated by the approval authority to the engine as the base approval number.';

(97) in Appendix 6, point 1.5.1 is replaced by the following:

'1.5.1. Example of the certification mark (joined marking)

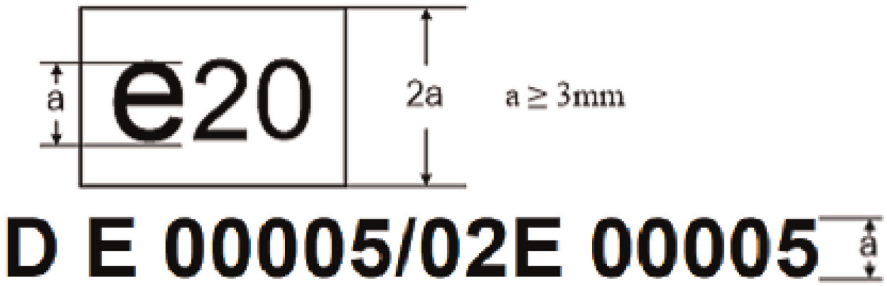

The above certification mark affixed to an engine shows that the type concerned has been certified in Poland (e20), pursuant to Regulation (EU) No 582/2011. The 'D' indicates Diesel followed by an 'E' for the emission step followed by five digits (00005) which are those allocated by the approval authority to the engine as the base approval number for Regulation (EU) No 582/2011. After the slash the first two figures are indicating the sequence number assigned to the latest technical amendment to this Regulation, followed by a letter 'E' for engine, followed by five digits allocated by the approval authority for the purpose of certification in accordance with this Regulation ('base approval number' to this Regulation).';

(98) in Appendix 6, point 2.1 is replaced by the following:

'2.1. Certification number for engines shall comprise the following:

eX*YYYY/YYYY*ZZZZ/ZZZZ*E*00000*00

section 1	section 2	section 3	Additional letter to section 3	section 4	section 5
Indication of country issuing the certification	HDV CO_2 determination Regulation "2017/2400"	Latest amending Regulation (ZZZZ/ZZZZ)	E - engine	Base certification number 00000	Extension 00';

(99) in Appendix 7, point (3), Table 1 is replaced by the following:

'Table 1

Input parameters "Engine/General"

Parameter name	Parameter ID	Type	Unit	Description/Reference
Manufacturer	P200	token	[-]	
Model	P201	token	[-]	
CertificationNumber	P202	token	[-]	
Date	P203	dateTime	[-]	Date and time when the component-hash is created
AppVersion	P204	token	[-]	Version number of engine pre-processing tool
Displacement	P061	int	[cm^3]	
IdlingSpeed	P063	int	[1/min]	
RatedSpeed	P249	int	[1/min]	
RatedPower	P250	int	[W]	
MaxEngineTorque	P259	int	[Nm]	
WHRTypeMechanicalOutputICE	P335	boolean	[-]	
WHRTypeMechanicalOutputDrivetrain	P336	boolean	[-]	
WHRTypeElectricalOutput	P337	boolean	[-]	
WHRElectricalCFUrban	P338	double, 4	[-]	Required if "WHRTypeElectricalOutput" = true
WHRElectricalCFRural	P339	double, 4	[-]	Required if "WHRTypeElectricalOutput" = true
WHRElectricalCFMotorway	P340	double, 4	[-]	Required if "WHRTypeElectricalOutput" = true
WHRElectricalBFColdHot	P341	double, 4	[-]	Required if "WHRTypeElectricalOutput" = true
WHRElectricalCFRegPer	P342	double, 4	[-]	Required if "WHRTypeElectricalOutput" = true
WHRMechanicalCFUrban	P343	double, 4	[-]	Required if "WHRTypeMechanicalOutputDrivetrain" = true
WHRMechanicalCFRural	P344	double, 4	[-]	Required if "WHRTypeMechanicalOutputDrivetrain" = true
WHRMechanicalCFMotorway	P345	double, 4	[-]	Required if "WHRTypeMechanicalOutputDrivetrain" = true
WHRMechanicalBFColdHot	P346	double, 4	[-]	Required if "WHRTypeMechanicalOutputDrivetrain" = true
WHRMechanicalCFRegPer	P347	double, 4	[-]	Required if "WHRTypeMechanicalOutputDrivetrain" = true';

(100) in Appendix 7, point (3), the following table is inserted:

'Table 1a

Input parameters "Engine" per fuel type

Parameter name	Parameter ID	Type	Unit	Description/Reference
WHTCUrban	P109	double, 4	[-]	
WHTCRural	P110	double, 4	[-]	
WHTCMotorway	P111	double, 4	[-]	
BFColdHot	P159	double, 4	[-]	
CFRegPer	P192	double, 4	[-]	
CFNCV	P260	double, 4	[-]	
FuelType	P193	string	[-]	Allowed values: "Diesel CI", "Ethanol CI", "Petrol PI", "Ethanol PI", "LPG PI", "NG PI", "NG CI";

(101) in Appendix 7, point (3), Table 3 is replaced by the following:

'Table 3

Input parameters "Engine/FuelMap" for each grid point in the fuel map

(One map required per fuel type)

Parameter name	Parameter ID	Type	Unit	Description/Reference
EngineSpeed	P072	double, 2	[1/min]	
Torque	P073	double, 2	[Nm]	
FuelConsumption	P074	double, 2	[g/h]	
WHRElectricPower	P348	int	[W]	Required if "WHRTypeElectrical-Output" = true
WHRMechanicalPower	P349	int	[W]	Required if "WHRTypeMechanical-OutputDrivetrain" = true';

(102) in Appendix 8, point 3.3, the following sentence is inserted:

'Extrapolated FC values lower than the measured value at full load at the respective engine speed are set to the measured value at full load.';

(103) in Appendix 8 the following point is inserted:

'3.6 Adding of WHR power = 0 at all points referred to in points (3.4) and (3.5).';

(104) in Appendix 8, the following points are inserted:

'5.6. In the case of dual-fuel engines, the calculated value for a correction factor for a specific fuel type may be lower than 1.

5.7. Notwithstanding point (5.6), if in the case of dual-fuel engines, the ratio of the measured total specific fuel energy values over the simulated total specific fuel energy values of both fuels is lower than 1, the specific fuel consumption values are adapted accordingly by the engine pre-processing tool so that the aforementioned ratio results in a value of 1.'.

ANNEX VI

Annex VI is amended as follows:

(1) in point 2(16), the following sentence is added:

'In some cases permanent slip in fixed gears is intended, e.g. to prevent vibrations;';

(2) in point 2(17), the first sentence is replaced by the following:

' "Start-off clutch" means a clutch that adapts speed between engine and driving wheels when the vehicle starts off.';

(3) in point 2(20), the following sentence is added:

'In some cases permanent slip in fixed gears is intended, e.g. to prevent vibrations;';

(4) points 2(22) and 2(23) are replaced by the following:

'(22) Case S' means an Automatic Powershifting Transmission (APT) with serial arrangement of a torque converter and the connected mechanical parts of the transmission

(23) Case P' means an APT with parallel arrangement of a torque converter and the connected mechanical parts of the transmission (e.g. in power split installations)';

(5) in point 2, the following points are added:

'(32) "Differential" means a device that splits a torque into two branches, e.g. for left- and right-hand side wheels, while allowing these branches to rotate at unequal speeds. The torque-splitting function can be biased or deactivated by a differential brake- or differential lock device (if applicable);

(33) "Case N" means an APT without a torque converter.';

(6) in point 3.1, the first paragraph, the formula is replaced by the following:

$$'T_{l,in}(n_{in},T_{in},gear) = T_{l,in,min_loss} + f_T \times T_{in} + f_{loss_corr} \times T_{in} + T_{l,in,min_el} + f_{el_corr} \times T_{in} + f_{loss_{tcc}} \times T_{in}';$$

(7) in point 3.1, the fourth paragraph, the following text is inserted after the formula:

'The correction factor for the losses in a slipping TC lock-up clutch as defined in point 2(16) or slipping input side clutch as defined in point 2(20) shall be calculated by:

$$f_{loss_{tcc}} = \frac{\Delta n_{tcc}}{n_{in}};'$$

(8) in point 3.1, the following explanatory notes are added:

'f_{loss_tcc} = Loss correction factor for slipping torque converter (or input side) clutch

n_{tcc} = Difference in speed between upstream and downstream side of slipping TC lock-up clutch as defined in point 2(16) or slipping input side clutch as defined in 2(20) [rpm] (speed downstream of the slipping clutch is the speed n_{in} at the transmission input shaft)';

(9) in point 3.1.2.2, the second sentence is replaced by the following:

'The measurements shall be performed at the same speed points and same test rig bearing temperature(s) ± 3 K used for the testing.';

(10) point 3.1.2.4.2 is replaced by the following:

'3.1.2.4.2. The pre-conditioning shall be performed without applied torque to the non driven shaft.';

(11) in point 3.1.2.4.4, the second sentence the number '60' is replaced by '100';

(12) in point 3.1.2.5.5, third paragraph, point (2) is replaced by the following:

'(2) input speed = minimum of 60 % of the maximum input speed, not higher than 80 % of the maximum input speed,';

(13) point 3.1.3.1 is replaced by the following:

'3.1.3.1. The electric machine and the torque sensor shall be mounted to the input side of the transmission. The output shaft(s) shall rotate freely. In the case of a transmission with an integrated differential, e.g. for front-wheel drive operation, the output ends shall be allowed to be rotatably locked into each other (e.g. by an activated differential lock or by means of any other mechanical differential lock implemented only for the measurement).';

(14) in point 3.1.3.5, second sentence, the reference to 'Annex VII' is replaced by 'Annex IX';

(15) in point 3.1.4, first sentence, 'ISO/TF' is replaced by 'IATF';

(16) point 3.1.6.2 is replaced by the following:

'3.1.6.2. The torque loss shall be measured for the following speed points (speed of the input shaft): 600, 900, 1 200, 1 600, 2 000, 2 500, 3 000, 4 000 rpm and multiples of 10 of these values up to the maximum speed per gear in accordance with the specifications of the transmission or the last speed point before the defined maximum speed. It is permitted to measure additional intermediate speed points.

The speed ramp (time for the change between two speed points) shall not exceed 20 seconds.';

(17) in point 3.1.6.3.3, the first sentence is replaced by the following:

'For each speed point a minimum of 5-second stabilisation time within the temperature limits defined in 3.1.2.5 is required.';

(18) point 3.1.6.3.4 is replaced by the following:

'3.1.6.3.4. After the stabilisation time, the torque loss should be constant at the actual measured speed point over time. If so, the measurement signals listed in 3.1.5. shall be recorded for a minimum of 5 seconds but for no longer than 15 seconds. If the torque loss is not constant at the actual measured speed point over time, e.g. by intended periodic variation of the torque losses caused by active or passive means of control, the manufacturer shall use the testing time required to get a reproducible and representative result.';

(19) point 3.1.7.1 is replaced by the following:

'3.1.7.1. The arithmetic mean values shall be calculated for each of the measurements of torque, speed, (if applicable) voltage and current. The measurements to be performed for a minimum of 5 seconds but for no longer than 15 seconds. If the torque loss is not constant at the actual measured speed point over time, e.g. by intended periodic variation of the torque losses caused by active or passive means of control, the manufacturer shall use the testing time required to get a reproducible and representative result.';

(20) in point 3.1.7.3, first paragraph, the first formula is replaced by the following:

$$'T_{loss} = T_{1,in}(n_{in}, T_{in,gear})';$$

(21) in point 3.1.8, Figure 1, the heading is replaced by the following:

'Example of test setup A for Option 1';

(22) in point 3.1.8, Figure 2, the heading is replaced by the following:

'Example of test setup B for Option 1';

(23) in point 3.1.8, the following text is added:

'A test setup for a transmission with integrated differential for front-wheel drive operation consists of a dynamometer on the transmission input side and at least one dynamometer on the transmission output side(s). Torque measuring devices shall be installed on the transmission input- and output- side(s). For test setups with only one dynamometer on the output side, the free rotating end of the transmission with integrated differential shall be rotatably locked to the other end on the output side (e.g. by an activated differential lock or by means of any other mechanical differential lock implemented only for the measurement).

The graduation of the factor i_{para} for the maximum influence of parasitic loads for specific torque sensor is equal to the above described cases (A/B/C).

Figure 2A

Example of test setup A for Option 1 for a transmission with integrated differential (e.g. for front-wheel drive operation)

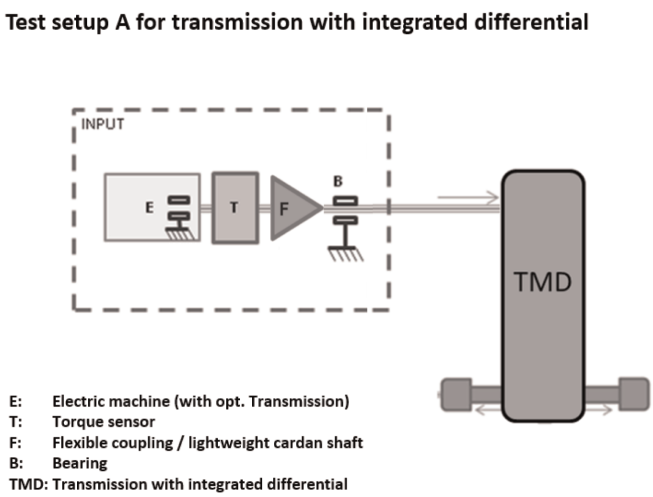

Figure 2B

Example of test setup B for Option 1 for a transmission with integrated differential (e.g. for front-wheel drive operation)

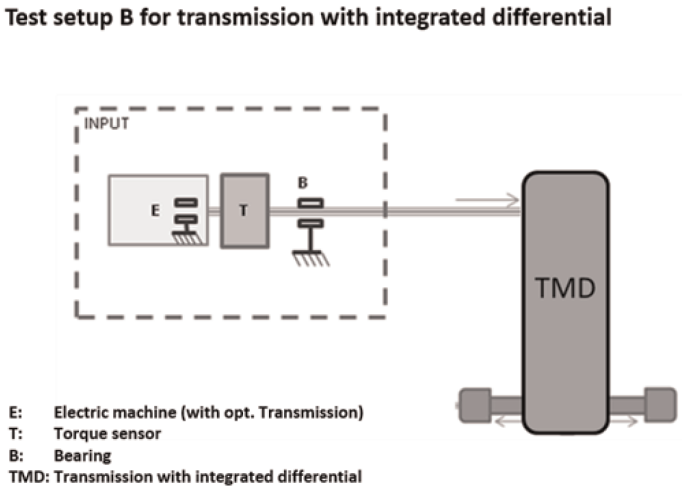

The manufacturer may adapt the test setups A and B based upon good engineering judgement and in agreement with the approval authority, e.g. in the case of practical test setup reasons. In the case of such a deviation, the reason and alternative setup shall be clearly specified in the test report.

It is allowed to perform the test without a separate bearing unit on the test rig at the transmission input/output side if the transmission shaft on which the torque is measured is supported by two bearings in the transmission housing which are able to absorb radial and axial forces caused by the gearsets.

Figure 2C

Example where the forces in the transmission are isolated and not isolated from the input:

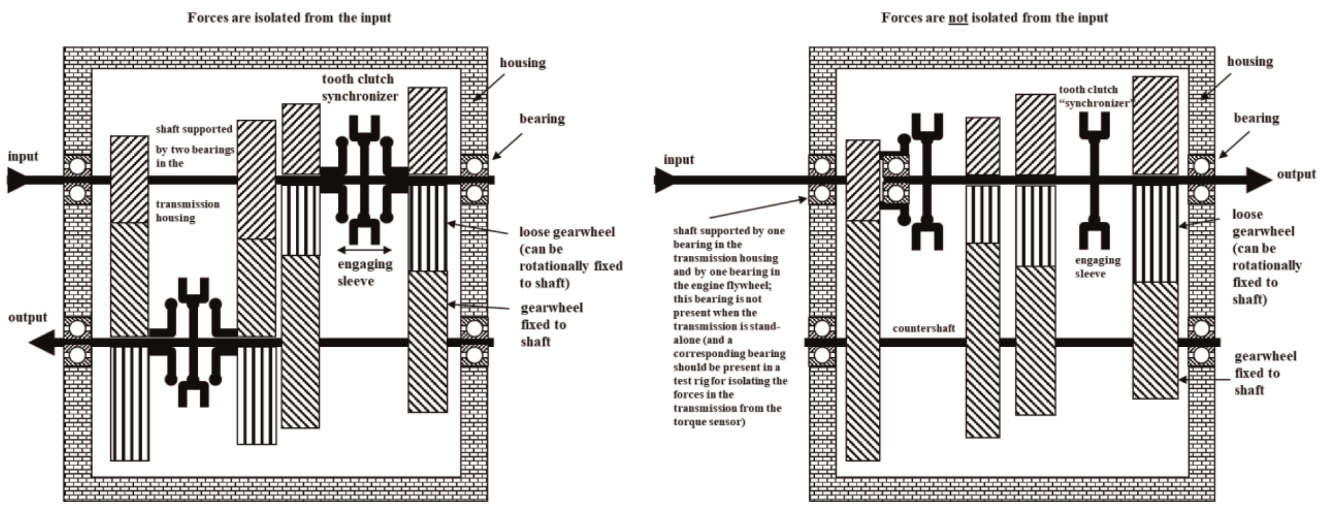

(24) in point 3.2, third paragraph, the formula is replaced by the following:

$$'T_{l,in}(n_{in},T_{in},gear) = T_{l,in,min_loss} + f_{Tlino} \times T_{in} + T_{l,in,min_el} + f_{el_corr} \times T_{in} + f_{loss_{tcc}} \times T_{in}';$$

(25) in point 3.2, the fifth paragraph is replaced by the following:

'The correction factor for the torque dependent electric torque losses f_{el_corr}, the torque loss at the input shaft of the transmission caused by the power consumption of transmission electric auxiliary $T_{l,in,el}$ and the loss correction factor f_{loss_tcc} for slipping TC lock-up clutch as defined in point 2(16) or slipping input side clutch as defined in 2(20) shall be calculated as described in point 3.1.';

(26) in point 3.3.3.4, second paragraph, point (2) is replaced by the following:

'(2) input speed = minimum of 60 %, not higher than 80 % of the maximum input speed,';

(27) in point 3.3.4, the second paragraph is replaced by the following:

'Torque sensors shall be installed at the input and output side(s) of the transmission.';

(28) points 3.3.6.2 and 3.3.6.3 are replaced by the following:

'3.3.6.2. Speed range

The torque loss shall be measured for the following speed points (speed of the input shaft): 600, 900, 1 200, 1 600, 2 000, 2 500, 3 000, 4 000 rpm and multiples of 10 of these values up to the maximum speed per gear according to the specifications of the transmission or the last speed point before the defined maximum speed. It is permitted to measure additional intermediate speed points.

The speed ramp (time for the change between two speed points) shall not exceed 20 seconds.

3.3.6.3. Torque range

For each speed point the torque loss shall be measured for the following input torques: 0 (free rotating output shaft), 200, 400, 600, 900, 1 200, 1 600, 2 000, 2 500, 3 000, 3 500, 4 000, […] Nm up to the maximum input torque per gear in accordance with the specifications of the transmission or the last torque point before the defined maximum torque and / or the last torque point before the output torque of 10 kNm. It is permitted to measure additional intermediate torque points. If the torque range is too small, additional torque points are required, so that at least 5 equally spaced torque points shall be measured. The intermediate torque points may be adjusted to the nearest multiple of 50 Nm.

In the case the output torque exceeds 10 kNm (for a theoretical loss free transmission) or the input power exceeds the specified maximum input power, point 3.4.4. shall apply.

The torque ramp (time for the change between two torque points) shall not exceed 15 seconds (180 seconds for option 2).

To cover the complete torque range of a transmission in the above defined map, different torque sensors with limited measurement ranges may be used on the input/output side. Therefore the measurement may be divided into sections using the same set of torque sensors. The overall torque loss map shall be composed of these measurement sections.';

(29) point 3.3.6.4.2 is replaced by the following:

'3.3.6.4.2. The input torque shall be varied according to the above defined torque points from the lowest to the highest torque which is covered by the current torque sensors for each speed point.';

(30) in point 3.3.6.4.3., the first sentence is replaced by the following: 'For each speed and torque point a minimum of 5-second stabilisation time within the temperature limits defined in 3.3.3. is required.';

(31) the following point is inserted:

'3.3.6.4.3.1. After the stabilisation time, the torque loss should be constant at the actual measured speed point over time. If so, the measurement signals listed in 3.3.7. shall be recorded for a minimum of 5 seconds but for no longer than 15 seconds. If the torque loss is not constant at the actual measured speed point over time, e.g. by intended periodic variation of the torque losses caused by active or passive means of control, the manufacturer shall use the testing time required to get a reproducible and representative result.';

(32) point 3.3.8.1 is replaced by the following:

'3.3.8.1. The arithmetic mean values of torque, speed, if applicable voltage and current for the measurement for a minimum of 5 seconds but for no longer than 15 seconds shall be calculated for each of the two measurements. If the torque loss is not constant at the actual measured speed point over time, e.g. by intended periodic variation of the torque losses caused by active or passive means of control, the manufacturer shall use the testing time required to get a reproducible and representative result.';

(33) in point 3.3.8.2, second sentence, the value of '0,5 %' is replaced by '1,0 %';

(34) point 3.3.8.3, is replaced by the following:

'3.3.8.3. The mechanical torque losses and (if applicable) electrical power consumption shall be calculated for each of the measurements as followed:

$$T_{loss} = T_{in} \times (1 + f_{loss_{tcc}}) - \frac{T_{out}}{i_{gear}} + \frac{\mathbf{I} \times \mathbf{U}}{(\mathbf{0,7} \times \mathbf{n_{in}} \times \frac{2\pi}{60})}$$

In the case of a transmission with integrated differential and a dynamometer on each output shaft, the total mechanical torque loss (T_{loss}) shall be calculated by:

$$T_{loss} = T_{in} \times (1 + f_{loss_{tcc}}) - \frac{T_{out_1}}{i_{gear}} - \frac{T_{out_2}}{i_{gear}} + \frac{\mathrm{I} \times \mathrm{U}}{(0,7 \times \mathrm{n_{in}} \times \frac{2\pi}{60})}$$

The correction factor for the loss correction f_{loss_tcc} for slipping TC lock-up clutch or slipping input side clutch in accordance with the definitions (16) and (20) shall be calculated as described in point 3.1.

It is allowed to subtract influences caused by the test rig setup from the torque losses (in accordance with section 3.1.2.2.).';

(35) in point 3.3.9, Figure 3, the heading is replaced by the following:

'Example of test setup A for Option 3';

(36) in point 3.3.9, Figure 4, the heading is replaced by the following:

'Example of test setup B for Option 3';

(37) in point 3.3.9, the following text is added:

'A test set-up for the transmission with integrated differential for front-wheel drive operation consists of a dynamometer on the transmission input side and at least one dynamometer on the transmission output side(s). Torque measuring devices shall be installed on the transmission input and output side(s). For test setups with only one dynamometer on the output side, the free rotating end of the transmission with integrated differential shall be rotatably locked to the other end on the output side (e.g. by an activated differential lock or by means of any other mechanical differential lock implemented only for the measurement).

The graduation of the factor i_{para} for the maximum influence of parasitic loads for the specific torque sensors is equal to the cases described above (A/B/C).

Figure 5

Example of test setup A for a transmission with integrated differential (e.g. for front-wheel drive operation)

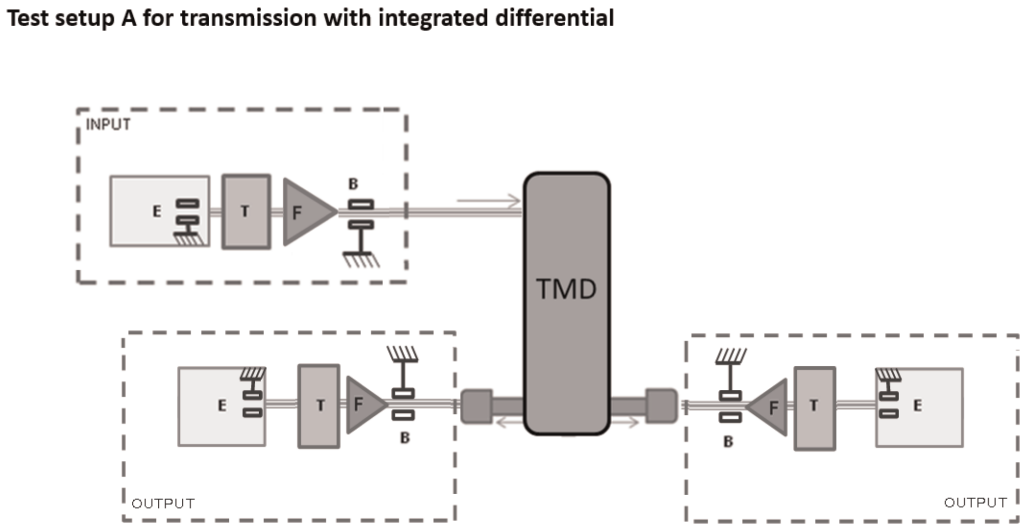

E: Electric machine (with opt. Transmission)
T: Torque sensor
F: Flexible coupling / lightweight cardan shaft
B: Bearing
TMD: Transmission with integrated differential

Figure 6

Example of test setup B for a transmission with integrated differential (e.g. for front-wheel drive operation)

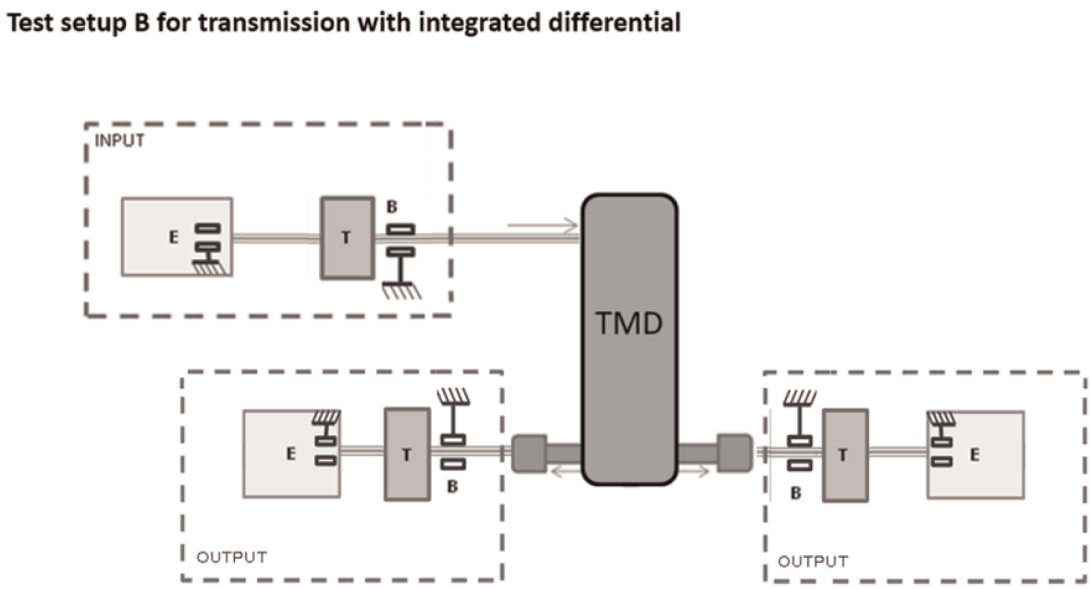

E: Electric machine (with opt. Transmission)
T: Torque sensor
B: Bearing
TMD: Transmission with integrated differential

In the case of a dynamometer on each output shaft, the total uncertainty of the torque loss ($U_{T,loss}$) shall be calculated by:

$$U_{T,loss} = \sqrt{U_{T,in}{}^2 + \left(\frac{U_{T,out1}}{i_{gear}}\right)^2 + \left(\frac{U_{T,out2}}{i_{gear}}\right)^2}$$

The manufacturer may adapt the test setups A and B based upon good engineering judgement and in agreement with the approval authority, e.g. in the case of practical test setup reasons. In the case of such a deviation, the reason and alternative setup shall be clearly specified in the test report.

It is allowed to perform the test without a separate bearing unit on the test rig at the transmission input/output side, if the transmission shaft on which the torque is measured is supported by two bearings in the transmission housing which are able to absorb radial and axial forces caused by the gearsets (see figure 2C in 3.1.8.).';

(38) in point 3.4, the first sentence is replaced by the following:

'For each gear a torque loss map covering the defined input speed and input torque points shall be determined with one of the specified testing options or standard torque loss values.';

(39) point 3.4.1is replaced by the following:

'In the cases the highest tested input speed was the last speed point below the defined maximum permissible transmission speed, an extrapolation of the torque loss shall be applied up to the maximum speed with linear regression based on the two last measured speed points.';

(40) in point 3.4.2, the first sentence is replaced by the following:

'In the cases the highest tested input torque was the last torque point below the defined maximum permissible transmission torque, an extrapolation of the torque loss shall be applied up to the maximum torque with linear regression based on the two last measured torque points for the corresponding speed point.';

(41) point 3.4.5 is replaced by the following:

'3.4.5. For speeds below the defined minimum speed and the additional input speed step of 0 rpm, the reported torque losses determined for the minimum speed point shall be copied.';

(42) point 3.4.8 is replaced by the following:

'3.4.8. If the measurement of speed points is technically not possible (e.g. due to natural frequency), the manufacturer may, in agreement with the approval authority, calculate the torque losses by interpolation or extrapolation (limited to max. 1 speed point per gear).';

(43) point 4, is replaced by the following:

'4. Testing procedure for torque converter (TC)

The torque converter characteristics to be determined for the simulation tool input consist of $T_{pum1000}$ (the reference torque at 1 000 rpm input speed) and μ (the torque ratio of the torque converter). Both are depending on the speed ratio v (= output (turbine) speed / input (pump) speed for the torque converter) of the torque converter.

For determination of the characteristics of the TC, the applicant for a certificate shall apply the following method, irrespective of the chosen option for the assessment of the transmission torque losses.

To take the two possible arrangements of the TC and the mechanical transmission parts into account, the following differentiation between case S and P shall apply:

Case S: TC and mechanical transmission parts in serial arrangement

Case P: TC and mechanical transmission parts in parallel arrangement (power split installation)

For case S arrangements the TC characteristics may be evaluated either separate from the mechanical transmission or in combination with the mechanical transmission. For case P arrangements the evaluation of TC characteristic is possible only in combination with the mechanical transmission. However, in this case and for the hydromechanical gears subject to measurement the whole arrangement, torque converter and mechanical transmission, is considered as a TC with similar characteristic curves as a sole torque converter. In the case of measurements together with a mechanical transmission, the speed ratio v and all corresponding values for step widths as well as limits shall be adjusted by taking the mechanical transmission ratio into account.

For the determination of the torque converter characteristics two measurement options may be applied:

(i) Option A: measurement at constant input speed;

(ii) Option B: measurement at constant input torque in accordance with SAE J643.

The manufacturer may choose option A or B for case S and case P arrangements.

For the input to the simulation tool, the torque ratio μ and reference torque T_{pum} of the torque converter shall be measured for a range of $v \leq 0{,}95$ (= vehicle propulsion mode).

In the case of use of standard values, the data on torque converter characteristics provided to the simulation tool shall only cover the range of $v \leq 0{,}95$ (or the adjusted speed ratio). The simulation tool automatically adds the generic values for overrun conditions.';

(44) in point 4.1.6, the term 'ISO/TS' is replaced by 'IATF';

(45) in point 4.1.7.2.5, the first sentence is replaced by the following:

'For each point a minimum of 3-second stabilisation time within the temperature limits defined in point 4.1.2. is required.';

(46) point 4.1.7.2.6, is replaced by the following:

'4.1.7.2.6. For each point the signals specified in 4.1.8. shall be recorded for the test point for a minimum of 3 seconds but for no longer than 15 seconds.';

(47) in point 4.2.7.2.5, the first sentence is replaced by the following:

'For each point a minimum of 5-second stabilisation time within the temperature limits defined in point 4.2.2. is required.';

(48) point 4.2.7.2.6, is replaced by the following:

'4.2.7.2.6. For each point the values specified in 4.2.8. shall be recorded for the test point for a minimum of 5 seconds but for no longer than 15 seconds.';

(49) in point 5, the heading is replaced by the following:

'Testing procedure for other torque transferring components (OTTC)';

(50) in point 5.1, Table 2, the third row is replaced by the following:

'C. Transmission Output Retarder or Axlegear Input Retarder	Transmission Output Shaft Speed or Axlegear Input Shaft Speed	$n_{retarder} = n_{transm.output} \times i_{step\text{-}up}$';

(51) point 6, is replaced by the following:

'6. Testing procedure for additional drivetrain components (ADC) / drivetrain component with a single speed ratio (e.g. angle drive)

6.1. Methods for establishing losses of a drivetrain component with a single speed ratio

The losses of a drivetrain component with a single speed ratio shall be determined using one of the following cases:

6.1.1. Case A: Measurement on a separate drivetrain component with a single speed ratio

For the torque loss measurement of a drivetrain component with a single speed ratio, the three options as defined for the determination of the transmission losses shall apply:

Option 1: Measured torque independent losses and calculated torque dependent losses (Transmission test option 1)

Option 2: Measured torque independent losses and measured torque dependent losses at full load (Transmission test option 2)

Option 3: Measurement under full load points (Transmission test option 3)

The measurement, the validation and the uncertainty calculation of the losses of a drivetrain component with a single speed ratio shall follow the procedure described for the related transmission test option in point 3 diverging in the following requirements:

Measurements shall be performed at 200 rpm and 400 rpm (at the input shaft of the drivetrain component with a single speed ratio) and for the following speed points: 600, 900, 1 200, 1 600, 2 000, 2 500, 3 000, 4 000 rpm and multiples of 10 of these values up to the maximum speed in accordance with specifications of the drivetrain component with a single speed ratio, or the last speed point before the defined maximum speed. It is permitted to measure additional intermediate speed points.

6.1.1.1 Applicable speed range:

6.1.2. Case B: Individual measurement of a drivetrain component with a single speed ratio connected to a transmission

Where the drivetrain component with a single speed ratio is tested in combination with a transmission, the testing shall follow one of the defined options for transmission testing:

Option 1: Measured torque independent losses and calculated torque dependent losses (Transmission test option 1)

Option 2: Measured torque independent losses and measured torque dependent losses at full load (Transmission test option 2)

Option 3: Measurement under full load points (Transmission test option 3)

6.1.2.1 The manufacturer may separate the losses of a drivetrain component with a single speed ratio from the total transmission losses by testing in the order as described below:

(1) The torque loss for the complete transmission including drivetrain component with a single speed ratio shall be measured as defined for the applicable transmission testing option

$$= T_{l,in,withad}$$

(2) The drivetrain component with a single speed ratio and related parts shall be replaced with parts required for the equivalent transmission variant without drivetrain component with a single speed ratio. The measurement of point (1) shall be repeated.

$$= T_{l,in,withoutad}$$

(3) The torque loss for the drivetrain component system with a single speed ratio shall be determined by calculating the differences between the two test data sets

$$= T_{l,in,adsys} = \max(0,\ T_{l,in,withad} - T_{l,in,withoutad})$$

6.2. Complement of input files for the simulation tool

6.2.1. Torque losses for speeds below the above defined minimum speed and additionally at input speed point of 0 rpm shall be set equal to the torque loss at the minimum speed.

6.2.2. In the cases the highest tested input speed of the drivetrain component with a single speed ratio was the last speed point below the defined maximum permissible speed of the drivetrain component with a single speed ratio, an extrapolation of the torque loss shall be applied up to the maximum speed with linear regression based on the two last measured speed points.

6.2.3. To calculate the torque loss data for the input shaft of the transmission the drivetrain component with a single speed ratio is to be combined with, linear interpolation and extrapolation shall be used.';

(52) in point 7.1, the second sentence is replaced by the following:

'The conformity of the certified CO_2 emissions and fuel consumption related properties procedures shall comply to the conformity of production arrangements laid down in Article 31 of Regulation (EU) 2018/858.';

(53) point 8.1.2.2.1 is replaced by the following:

'8.1.2.2.1. In the case Option 1 was used for certification testing, the torque independent losses for the two speeds defined in point 3 of 8.1.2.2.2. shall be measured and used for the calculation of the torque losses at the three torque points defined in point 2 in 8.1.2.2.2.

In the case Option 2 was used for certification testing, the torque independent losses for the two speeds defined in point 3 of 8.1.2.2.2. shall be measured. The torque dependent losses at maximum torque shall be measured at the same two speeds. The torque losses at the three torque points defined in point 2 in 8.1.2.2.2. shall be interpolated as described by the certification procedure.

In the case Option 3 was used for certification testing, the torque losses for the 18 operating points defined in 8.1.2.2.2. shall be measured.';

(54) in point 8.1.2.2.2, point (2) is replaced by the following:

'(2) Torque range:

In the case Option 1 or 2 was used for certification testing, the following 3 torque points shall be used: 0,6 × max($T_{in,rep}$(inputspeed, gear)), 0,8 × max($T_{in,rep}$(inputspeed, gear)) and max($T_{in,rep}$(inputspeed, gear)) where max($T_{in,rep}$(inputspeed, gear)) is the largest input torque value reported for certification for the combination of input speed and gear in question.

In the case Option 3 was used for certification testing, the 3 highest torque points that were measured at the certification testing for the combination of input speed and gear in question shall be used.';

(55) point 8.1.2.3 is replaced by the following:

'8.1.2.3 For each of the 18 operating points, the efficiency of the transmission shall be calculated with:

$$\eta_i = \frac{T_{in,set} - T_{loss,rep}}{T_{in,set}}$$

where:

η_i = Efficiency of each operation point 1 to 18

$T_{in,set}$ = Input torque set point value [Nm]

$T_{loss,rep}$ = Reported torque loss (after uncertainty correction) [Nm]';

(56) in point 8.1.3, the following text is added:

'The efficiency of the approved transmission $\eta_{A,TA}$ shall be calculated by the arithmetic mean value of the efficiency of 18 operating points during certification based on the formulas in 8.1.2.3 and 8.1.2.4, defined by the requirements in 8.1.2.2.2.';

(57) in Appendix 2, Part 1, in point 1.18, the introductory wording is replaced by the following:

'Gear ratios [-] and maximum input torque [Nm], maximum input power (kW) and maximum input speed [rpm] for the highest rated version per family member (where the same family member is sold with different commercial names).';

(58) in Appendix 2, Part 1, the following point is added:

'1.19 TC lock-up clutch slip in fixed gears (yes/no)

If yes, declaration of permanent slip in TC lock-up clutch or input side clutch in separate maps for each gear depending of measured input speed/torque points, see example of data for gear 1 below:

TC-slip [rpm] Gear 1

Input Torque Reference (Nm)	Input Speed Reference (rpm)					
	600	900	1 200	1 600	2 000	2 500
0	20	50	60	60	60	60
200	30	40	10	10	10	10
400	30	40	20	20	20	20
600	30	40	20	20	20	20
900	30	40	20	20	20	20
1 200	30	40	20	20	20	20';

(59) in Appendix 7, point 1.4, the first paragraph is replaced by the following:

'The certification mark shall also include in the vicinity of the rectangle the "base approval number" as specified for Section 4 of the type-approval number set out in Annex IV to Regulation (EU) 2020/683, preceded by the two figures indicating the sequence number assigned to the latest technical amendment to this Regulation and by an alphabetical character indicating the part for which the certificate has been granted.';

(60) in Appendix 7, point 1.4, second paragraph, the number '00' is replaced by '02';

(61) in Appendix 7, point 1.5 is replaced by the following:

'1.5 Example of the certification mark

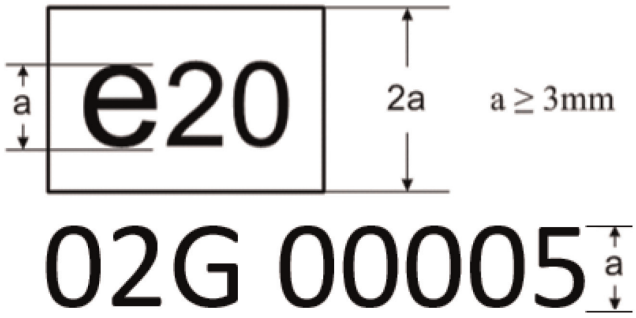

The above certification mark affixed to a transmission, torque converter (TC), other torque transferring component (OTTC) or additional drivetrain component (ADC) shows that the type concerned has been certified in Poland (e20), pursuant to this Regulation. The first two digits (02) are indicating the sequence number assigned to the latest technical amendment to this Regulation. The following digit indicates that the certification was granted for a transmission (G). The last five digits (00005) are those allocated by the approval authority to the transmission, as the base approval number.';

(62) in Appendix 7, point 2.1 is replaced by the following:

'2.1 Certification number for transmissions, torque converter, other torque transferring component and additional drivetrain component shall comprise the following:

eX*YYYY/YYYY*ZZZZ/ZZZZ*X*00000*00

section 1	section 2	section 3	Additional letter to section 3	section 4	section 5
Indication of country issuing the certificate	HDV CO_2 determination Regulation "2017/2400"	Latest amending Regulation (ZZZZ/ZZZZ)	See Table 1 of this Appendix	Base certification number 00000	Extension 00'

(63) in Appendix 8, the following text is added:

'For transmissions with integrated differential, the integrated differential shall be treated as an angle drive. Thereby, the expressions for T_{add0}, $T_{add1000}$ and $f_{T_{add}}$ above shall be used for calculating $T_{l,in}$.';

(64) Appendix 10 is replaced by the following:

'Appendix 10

Standard torque loss values – other torque transferring components

Calculated standard torque loss values for other torque transferring components:

For primary hydrodynamic retarders (oil or water) with included vehicle launch functionality, the retarder drag torque shall be calculated by

$$T_{retarder} = \frac{20}{i_{step-up}} + \left(\frac{4}{(i_{step-up})^3}\right) \times \left(\frac{n_{retarder}}{1000}\right)^2$$

For other hydrodynamic retarders (oil or water), the retarder drag torque shall be calculated by

$$T_{retarder} = \frac{10}{i_{step-up}} + \left(\frac{2}{(i_{step-up})^3}\right) \times \left(\frac{n_{retarder}}{1000}\right)^2$$

For magnetic retarders (permanent or electro-magnetic), the retarder drag torque shall be calculated by:

$$T_{retarder} = \frac{12}{i_{step-up}} + \left(\frac{5}{(i_{step-up})^4}\right) \times \left(\frac{n_{retarder}}{1000}\right)^2$$

where:

$T_{retarder}$ = Retarder drag loss [Nm]

$n_{retarder}$ = Retarder rotor speed [rpm] (see point 5.1 of this Annex)

$i_{step-up}$ = Step-up ratio = retarder rotor speed / drive component speed (see point 5.1 of this Annex)'

(65) in Appendix 11, the heading is replaced by the following:

'Standard torque loss values – geared angle drive or drivetrain component with a single speed ratio';

(66) in Appendix 11, the introductory wording of the first paragraph is replaced by the following:

'Consistent with the standard torque loss values for the combination of a transmission with a geared angle drive in Appendix 8, the standard torque losses of a geared angle drive or drivetrain component with a single speed ratio without transmission shall be calculated from:';

(67) in Appendix 12, Table 1, fifth column, seventh row, the text is replaced by the following:

'Allowed values ([1]): "SMT", "AMT", "APT-S", "APT-P", "APT-N", "IHPC Type 1" ';

(68) in Appendix 12, Table 1, the following rows are added:

'DifferentialIncluded	P353	boolean	[-]	
AxlegearRatio	P150	double, 3	[-]	Optional, only required in the event "DifferentialIncluded" is true.'

(69) in Appendix 12, Table 2, fifth column, the third row, the following description is inserted:

'In the case of transmission with included differential, transmission gear ratio shall only be indicated without considering axle gear ratio';

(70) in Appendix 12, the heading of Table 6 is replaced by the following:

'Input parameters "ADC/General" (only required if component applicable)';

(71) in Appendix 12, the heading of Table 7 is replaced by the following:

'Input parameters "ADC/LossMap" for each grid point in the loss map (only required if component applicable)'.

ANNEX VII

Annex VII is amended as follows:

(1) in point 2(2), the last sentence is replaced by the following:

'Typically, the first reduction is a bevel gear set, the second one a spur gear set (or helical gear set) with vertical offset close to the wheels.';

(2) in point 3, the first paragraph is replaced by the following:

'The axle gears and all bearings shall be new for the verification of axle losses, while wheel end bearings may already be run in and may be used for multiple measurements.';

(3) in point 4.1.3, the last sentence is replaced by the following:

'In the case of testing different gear ratio variants with one axle housing, new oil shall be filled in for each single measurement of the whole axle system.';

(4) in point 4.2.3, first paragraph, the last sentence is replaced by the following:

'For type A setups with only one dynamometer on the output side, the freely rotating end of the axle shall be rotatably locked to the other end on the output side (e.g. by an activated differential lock or by means of any other mechanical differential lock implemented only for the measurement).';

(5) in point 4.2.3, third paragraph, the last sentence is replaced by the following:

'Figure 1 shows an example for a test setup of Type A in a two dynamometer lay-out.';

(6) in point 4.3.1, first sentence, the term 'ISO/TS' is replaced by 'IATF';

(7) in point 4.3.2(v), the following text is added:

'[°C] (optional)';

(8) point 4.3.3 is replaced by the following:

'4.3.3 Torque range:

The extent of the torque loss map to be measured is limited to:

— either an output torque of 10 kNm for heavy lorries and heavy buses or 2 kNm for medium lorries;

— or an input torque of 5 kNm for heavy lorries and heavy buses or 1 kNm for medium lorries;

— or the maximum engine power tolerated by the manufacturer for a specific axle or in the case of multiple driven axles in accordance with the nominal power distribution.';

(9) point 4.3.3.2 is replaced by the following:

'4.3.3.2 Output torque steps to be measured for heavy lorries and heavy buses:

250 Nm < T_{out} < 1 000 Nm:	250 Nm steps
1 000 Nm ≤ T_{out} ≤ 2 000 Nm:	500 Nm steps
2 000 Nm ≤ T_{out} ≤ 10 000 Nm:	1 000 Nm steps
T_{out} > 10 000 Nm:	2 000 Nm steps

Output torque steps to be measured for medium lorries:

50 Nm < T_{out} < 200 Nm:	50 Nm steps
200 Nm ≤ T_{out} ≤ 400 Nm:	100 Nm steps
400 Nm ≤ T_{out} ≤ 2 000 Nm:	200 Nm steps
T_{out} > 2 000 Nm:	400 Nm steps';

(10) in point 4.3.4.2, the first sentence is replaced by the following:

'The maximum wheel speed is measured under consideration of the smallest applicable tire diameter at a vehicle speed of 90 km/h for medium and heavy lorries and 110 km/h for heavy buses.';

(11) point 4.3.5 is replaced by the following:

'4.3.5 Wheel speed steps to be measured

The wheel speed step width for testing shall be 50 rpm for heavy lorries and heavy buses and 100 rpm for medium lorries. It is permitted to measure intermediate speed steps.';

(12) in point 4.4.1, the first sentence is replaced by the following:

'For each speed step the torque loss shall be measured for each output torque step starting from the lowest torque value upward to the maximum and downward to the minimum.';

(13) point 4.4.2 is replaced by the following:

'4.4.2 Measurement duration

The measurement duration for each single grid point shall be a minimum of 5 seconds but no longer than 20 seconds.';

(14) in point 4.4.6, second paragraph, the first formula is deleted;

(15) in point 4.4.6, second paragraph, in the explanatory note for 'ΔK', the text 'ΔK =15K' is replaced by 'ΔK = 15';

(16) point 4.4.7 is replaced by the following:

'4.4.7 Assessment of total uncertainty of the torque loss

In the case the calculated uncertainties $U_{T,in/out}$ are below the following limits, the reported torque loss $T_{loss,rep}$ shall be regarded as equal to the measured torque loss T_{loss}.

$U_{T,in}$: 7,5 Nm or 0,25 % of the measured torque, whichever allowed uncertainty value is higher

For test setups with one dynamometer on the output side:

$U_{T,out}$: 15 Nm or 0,25% of the measured torque, whichever allowed uncertainty value is higher

For test setups with two dynamometers on each output side:

$U_{T,out}$: 7,5 Nm or 0,25% of the measured torque, whichever allowed uncertainty value is higher

In the case of higher calculated uncertainties, the part of the calculated uncertainty exceeding the above specified limits shall be inserted to T_{loss} for the reported torque loss $T_{loss,rep}$ as follows:

If the limits of $U_{T,in}$ are exceeded:

$$T_{loss,rep} = T_{loss} + \Delta UT_{in}$$

$$\Delta U_{T,in} = MIN((U_{T,in} - 0{,}25\% \times T_c) \text{ or } (U_{T,in} - 7{,}5 \text{ Nm}))$$

If limits of $U_{T,out}$ out are exceeded:

$$T_{loss,rep} = T_{loss} + \Delta U_{T,out} / i_{gear}$$

For test setups with one dynamometer on the output side:

$$\Delta U_{T,out} = MIN((U_{T,out} - 0{,}25\% \times T_c) \text{ or } (U_{T,out} - 15\text{Nm}))$$

For test setups with two dynamometers on each output side:

$$\Delta U_{T,out} = \sqrt{(\Delta U_{T,out\ 1})^2 + (\Delta U_{T,out\ 2})^2}$$

$$\Delta U_{T,out_1} = MIN((U_{T,out_1} - 0{,}25\% \times T_c) \text{ or } (U_{T,out_1} - 7{,}5Nm))$$

$$\Delta U_{T,out_2} = MIN((U_{T,out_1} - 0{,}25\% \times T_c) \text{ or } (U_{T,out_1} - 7{,}5Nm))$$

where:

$U_{T,in/out}$ = Uncertainty of input / output torque loss measurement separately for input and output torque; [Nm]

i_{gear} = Axle gear ratio [-]

ΔU_T = The part of the calculated uncertainty exceeding the specified limits';

(17) point 4.4.8.2 is replaced by the following:

'4.4.8.2 For the output torque range values below the lowest measured grid point as defined in section 4.3.3.2, the torque loss values of the lowest measured grid point shall be applied.';

(18) in point 5.1., the last sentence is replaced by the following:

'The conformity of the certified CO_2 emissions and fuel consumption related properties procedures shall comply with those set out in Article 31 of Regulation (EU) 2018/858.';

(19) in point 6.2.2(iii), the following sentence is added:

'If the selected point is in the middle between two approved points, the higher point shall be used.';

(20) in point 6.2.5, the last sentence is replaced by the following:

'This can be done prior to the run-in procedure or after the run-in procedure in accordance with point 3.1 or by extrapolation of all the torque map values for each speed step downwards to 0 Nm. The extrapolation shall be linear or a polynomial second order, depending which standard deviation is lower.';

(21) in point 6.3.1, the following text is added:

'In the event of a single portal axle with different length of the two output shafts, a test setup with two electric machines and two torque sensors on each output is also permitted. In this respect, both output shafts are driven synchronously in driving direction. The final drag torque is represented by the sum of both output torques.';

(22) in point 6.4.1, Table 2 is replaced by the following:

'Table 2

Axleline	Tolerances for axles measured in CoP after run-in Comparison to Td0				Tolerances for axles measured in CoP without run in Comparison to Td0			
	for i	tolerance Td0_input [Nm]	for i	tolerance Td0_input [Nm]	for i	tolerance Td0_input Nm]	for i	tolerance Td0_input [Nm]
SR	≤ 3	10	> 3	9	> 3	16	> 3	15
SRT	≤ 3	11	> 3	10	> 3	18	> 3	16
SP	≤ 6	11	> 6	10	> 6	18	> 6	16
HR	≤ 7	15	> 7	12	> 7	25	> 7	20
HRT	≤ 7	16	> 7	13	> 7	27	> 7	21

i = gear ratio'

(23) in Appendix 2, Part 1, point 1.3 is replaced by the following:

'1.3 Axle housing (drawing)';

(24) in Appendix 2, Part 1, point 1.5 is replaced by the following:

'1.5 Oil volume(s); [cm^3]';

(25) in Appendix 2, Part 1, point 1.6 is replaced by the following:

'1.6 Oil level(s); [mm]';

(26) in Appendix 2, Part 1, point 1.8 is replaced by the following:

'1.8 Bearing type (type, quantity, inner diameter, outer diameter, width and drawing)';

(27) in Appendix 2, Part 1, point 1.9 is replaced by the following:

'1.9 Seal type (main diameter, lip quantity); [mm]';

(28) in Appendix 2, Part 1, point 1.10 is replaced by the following:

'1.10 Wheel ends (drawing)';

(29) in Appendix 2, Part 1, point 1.10.1 is replaced by the following:

'1.10.1 Bearing type (type, quantity, inner diameter, outer diameter, width and drawing)';

(30) in Appendix 2, Part 1, point 1.10.2 is replaced by the following:

'1.10.2 Seal type (main diameter, lip quantity); [mm]';

(31) in Appendix 2, Part 1, point 1.11 is replaced by the following:

'1.11 Number of planetary / spur gears for differential carrier';

(32) in Appendix 2, Part 1, point 1.12 is replaced by the following:

'1.12 Smallest width of planetary/ spur gears for differential carrier; [mm]';

(33) Appendix 3 is replaced by the following:

'Appendix 3

Calculation of the standard torque loss

The standard torque losses for axles are shown in Table 1. The standard table values consist of the sum of a generic constant efficiency value covering the load dependent losses and a generic basic drag torque loss to cover the drag losses at low loads.

Tandem axles shall be calculated using a combined efficiency for an axle including drive-thru (SRT, HRT) plus the matching single axle (SR, HR).

Table 1

Generic efficiency and drag loss

Basic function	Generic efficiency η	Drag torque (wheel side) $T_{d0} = T_0 + T_1 \times i_{gear}$
Single reduction axle (SR)	0,98	T_0 = 70 Nm T_1 = 20 Nm
Single reduction tandem axle (SRT) / single portal axle (SP)	0,96	T_0 = 80 Nm T_1 = 20 Nm
Hub reduction axle (HR)	0,97	T_0 = 70 Nm T_1 = 20 Nm
Hub reduction tandem axle (HRT)	0,95	T_0 = 90 Nm T_1 = 20 Nm
All other axle technologies	0,90	T_0 = 150 Nm T_1 = 50 Nm

The basic drag torque (wheel side) T_{d0} is calculated by

$$T_{d0} = T_0 + T_1 \times i_{gear}$$

using the values from Table 1.

The standard torque loss $T_{loss,std}$ on the input side of the axle is calculated by

$$T_{loss,std} = \frac{T_{d0} + \frac{T_{out}}{\eta} - T_{out}}{i_{gear}}$$

where:

$T_{loss,std}$ = Standard torque loss at the input side [Nm]

T_{d0} = Basis drag torque over the complete speed range [Nm]

i_{gear} = Axle gear ratio [-]

η = Generic efficiency for load dependent losses [-]

T_{out} = torque [Nm]

The corresponding torque (at input side) of the axle shall be calculated by

$$T_{in} = \frac{T_{out}}{i_{gear}} + T_{loss,std}$$

where:

T_{in} = Input torque [Nm]';

(34) in Appendix 4, point 3.1(o) is replaced by the following:

'(o) Type of bearings (inner diameter, outer diameter and width) at corresponding positions (if fitted) within ±1 mm of drawing reference';

(35) in Appendix 4, point 3.1, the following text is added:

'(p) Type of sealing';

(36) in Appendix 5, point 1.4 is replaced by the following:

'The certification mark shall also include in the vicinity of the rectangle the "base certification number" as specified for Section 4 of the type- approval number set out in Annex IV to Regulation (EU) 2020/683, preceded by the two figures indicating the sequence number assigned to the latest technical amendment to this Regulation and by a character "*L*" indicating that the certificate has been granted for an axle.

For this Regulation, the sequence number shall be 02.';

(37) in Appendix 5, point 1.4.1 is replaced by the following:

'1.4.1 Example and dimensions of the certification mark

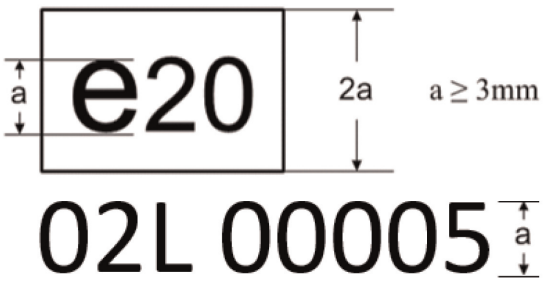

The above certification mark affixed to an axle shows that the type concerned has been approved in Poland (e20), pursuant to this Regulation. The first two digits (02) are indicating the sequence number assigned to the latest technical amendment to this Regulation. The following letter indicates that the certificate was granted for an axle (L). The last five digits (00005) are those allocated by the type-approval authority to the axle as the base certification number.';

(38) in Appendix 5, point 2.1. is replaced by the following:

'2.1 Certification number for axles shall comprise the following:

eX*YYYY/YYYY*ZZZZ/ZZZZ*L*00000*00

section 1	section 2	section 3	Additional letter to section 3	section 4	section 5
Indication of country issuing the certificate	HDV CO_2 determination Regulation "2017/2400"	Latest amending Regulation (ZZZZ/ZZZZ)	L = Axle	Base certification number 00000	Extension 00'.

ANNEX VIII

Annex VIII is amended as follows:

(1) point 1 is replaced by the following:

'1. Introduction

This Annex sets out the test procedures for the determination of air drag data.';

(2) in point 3, first paragraph, the last sentence is replaced by the following:

'The value $C_d \cdot A_{declared}$ shall be the input for the simulation tool and the reference value for conformity of the certified CO_2 emissions and fuel consumption related properties testing.';

(3) point 3.3 is replaced by the following:

'3.3. Installation of the vehicle

3.3.1. General installation requirements

3.3.1.1. The vehicle tested shall represent the vehicle to be placed on the market, in accordance with the requirements for vehicle type approval in accordance with Regulation (EU) 2018/858. Equipment which is necessary to execute the constant speed test (e.g. overall vehicle height including anemometer) is excluded from this provision.

3.3.1.2. The vehicle shall be equipped with tyres meeting the following criteria:

— Best or second best label for fuel efficiency which is available at the moment the test is performed;

— Maximum tread depth of 10 mm on all tyres of the complete vehicle, including the trailer (if applicable);

— Tyres inflated within a tolerance of ± 20 kPa of the pressure marked on the tyre sidewall in accordance with Article 3 of UN Regulation No. 54 (*).

3.3.1.3. The axle alignment shall be within the manufacturer's specifications.

3.3.1.4. No active tyre pressure control systems are allowed to be used during the measurements of the low speed - high speed - low speed tests.

3.3.1.5. If the vehicle is equipped with an active aero device, the device may be active during the constant speed test under the following conditions:

— it has been demonstrated to the approval authority that the device is always activated and effective to reduce the air drag at vehicle speeds higher than 60 km/h for medium and heavy lorries and higher than 80 km/h for heavy buses;

— the device is installed and effective in a similar manner on all vehicles of the family.

In all other cases the active aero device has to be fully deactivated during the constant speed test.

3.3.1.6. The vehicle shall not be equipped with any provisional features, modifications or devices that are not representative for the vehicle in use, aimed to reducing the air drag value during the test (e.g. sealed bodywork gaps). Modifications which aim to align the aerodynamic characteristics of the tested vehicle to the specifications of the parent vehicle are allowed.

3.3.1.7. Aftermarket parts, i.e. parts which are not covered by the vehicle type approval in accordance with Regulation 2018/858 (e.g. sun visors, horns, additional head lights, signal lights, bull bars or ski-boxes) are not considered for the air drag in accordance with this Annex.

3.3.1.8. The vehicle shall be measured without payload.

3.3.2. Installation requirements applicable for medium and heavy rigid lorries

3.3.2.1. The vehicle chassis shall fit to the dimensions of the standard body or semi-trailer as defined in Appendix 4 of this Annex.

3.3.2.2. The vehicle height determined in accordance with 3.5.3.1 item vii shall be within the limits as specified in Appendix 3 of this Annex.

3.3.2.3. The minimum distance between the cabin and the box body or semi-trailer shall be in accordance with the manufacturer's requirements and body builder's instructions.

3.3.2.4. The cabin and the aero accessories shall be adapted to best fit to the defined standard body or semi-trailer. The installation of the aero accessories (e.g. spoiler) shall be in accordance with the instructions of the manufacturer.

3.3.2.5. The setup of the semi-trailer shall be as defined in Appendix 4 of this Annex.

(*) Regulation No 54 of the Economic Commission for Europe of the United Nations (UNECE) – Uniform provisions concerning the approval of pneumatic tyres for commercial vehicles and their trailers (OJ L 183, 11.7.2008, p. 41).';

(4) in point 3.4, first paragraph, in the first sentence 'ISO/TS' is replaced by 'IATF';

(5) point 3.4.1.2 is replaced by the following:

'3.4.1.2. The following system requirements shall be met by a single torque meter by calibration:

(i) Non linearity: < ± 6 Nm for heavy lorries and heavy buses

< ± 5 Nm for medium lorries;

(ii) Repeatability: < ± 6 Nm for heavy lorries and heavy buses

< ± 5 Nm for medium lorries;

(iii) Crosstalk: < ± 10 Nm for heavy lorries and heavy buses

< ± 8 Nm for medium lorries

(only applicable for rim torque meters);

(iv) Measurement rate: ≥ 20 Hz

where:

"Non linearity" means the maximum deviation between ideal and actual output signal characteristics in relation to the measurand in a specific measuring range.

"Repeatability" means closeness of the agreement between the results of successive measurements of the same measurand carried out under the same conditions of measurement.

"Crosstalk" means signal at the main output of a sensor (M_y), produced by a measurand (F_z) acting on the sensor, which is different from the measurand assigned to this output. Coordinate system assignment is defined in accordance with ISO 4130.

The recorded torque data shall be corrected for the instrument error determined by the supplier.';

(6) point 3.4.3 is replaced by the following:

'3.4.3. Reference signal for calculation of rotational speed of the wheels at the driven axle

One out of three options shall be selected:

Option 1: Engine speed based

The CAN engine speed signal together with the transmission ratios (gears for low speed test and high speed test, axle ratio) shall be made available. For the CAN engine speed signal it shall be demonstrated that the signal provided to the air drag pre-processing tool is identical to the signal to be used for in-service testing as set out in Annex I to Regulation (EU) 582/2011.

For vehicles with torque converter which are not able to drive the low speed test with closed lockup clutch in option 1, additionally the cardan shaft speed signal and the axle ratio or the average wheel speed signal for the driven axle shall be provided to the air drag pre-processing tool. It shall be demonstrated that the engine speed calculated from this additional signal is within 1 % range compared to the CAN engine speed. This shall be demonstrated for the average value over a measurement section driven at the lowest possible vehicle speed in the torque converter locked mode and at the applicable vehicle speed for the high speed test.

Option 2: Wheel speed based

The average of the CAN signals for the rotational speed of left and right wheel at the driven axle shall be made available. Alternatively external sensors may be used. Any method shall fulfill the requirements set out in Table 2 of Annex Xa.

Following option 2 the input parameters for gear ratios and axle ratio shall be set to 1, independent of the powertrain configuration.

Option 3: Electric motor speed based

In the case of hybrid and fully electric vehicles, the CAN electric motor speed signal together with the transmission ratios (gears for low speed test and high speed test and if applicable axle ratio) shall be made available. It shall be demonstrated that the wheel speed of the driven axle in the low and high speed test is defined solely by these powertrain configuration specifications.';

(7) point 3.4.7.2 is replaced by the following:

'3.4.7.2. Installation position

The mobile anemometer shall be installed on the vehicle in the prescribed position:

(i) X position:

Medium and heavy rigid lorries and tractors: front face ± 0,3 m of the semi-trailer or box-body;

Heavy buses: Between the end of the front quarter of the vehicle and the rear end of the vehicle.

Medium van lorries: between B-Pillar up to the rear end of the vehicle.

(ii) Y position: plane of symmetry within a tolerance ± 0,1 m;

(iii) Z position:

The installation height above the vehicle shall be one third of the total vehicle height measured from the ground within a tolerance of 0,0 m to + 0,2 m For vehicles with a total vehicle height above 4 m, on request of the manufacturer the installation height above the vehicle can be limited to 1,3 m, with a tolerance of 0,0 m to + 0,2 m.

The instrumentation shall be done as accurate as possible using geometrical or optical aids. Any remaining misalignment is subject to the misalignment calibration to be performed in accordance with 3.6 of this Annex.';

(8) in point 3.4.9, first paragraph, the last sentence is replaced by the following:

'The IR sensor shall be calibrated in accordance with ASTM E2847 or VDI/VDE 3511.';

(9) in point 3.5.2., the second sentence is replaced by the following:

'maximum speed: 95 km/h for medium and heavy lorries and 103 km/h for heavy buses;';

(10) in point 3.5.3.1 (vi), the last sentence is replaced by the following:

'A misalignment calibration test has to be performed every time the anemometer has been mounted newly on the vehicle or has been adjusted.';

(11) in point 3.5.3.1, point (vii) is replaced by the following:

'(vii) Check of vehicle setup regarding the height and geometry, in standard ride height position:

— Medium and heavy rigid lorries and tractors: the maximum height of the vehicle shall be determined by measuring at the four corners of the box body/semi-trailer.

— Heavy buses and medium van lorries: the maximum height of the vehicle shall be measured in accordance with the technical requirements of Annex I to Regulation (EU) No 1230/2012, by not taking into account the devices and equipment referred to in Appendix 1 of that Annex.';

(12) in point 3.5.3.3, the last sentence is replaced by the following:

'The standstill phase shall not exceed 15 minutes.';

(13) in point 3.5.3.4, the last sentence is replaced by the following:

'The warm-up phase in accordance with this point shall not be shorter than the standstill phase and not exceed 30 minutes.';

(14) in point 3.5.3.5, the following subpoint is added:

'viii. Any deceleration prior to the start of the low speed test shall be performed in a manner that minimises the use of the mechanical service brake, i.e. by coasting or using the retarder.';

(15) in point 3.6.3, the last sentence is replaced by the following:

'The signals for wheel torques and engine, cardan or average wheel speed are not used in the evaluation.';

(16) point 3.6.5(c) is replaced by the following:

'(c) a different tractor or rigid lorry is used';

(17) in point 3.9, Table 2 is replaced by the following:

'Table 1

Input data for the air drag pre-processing tool – vehicle data file

Input data	Unit	Remarks
Vehicle group code	[-]	1 – 19 for heavy lorries in accordance with Table 1 of Annex I 31a – 40f for heavy buses in accordance with Tables 4 to 6 of Annex I 51 – 56 for medium lorries in accordance with Table 2 of Annex I
Vehicle configuration with trailer	[-]	if the vehicle was measured without trailer (input "No") or with trailer i.e. as a tractor semitrailer combination (input "Yes")
Vehicle test mass	[kg]	actual mass during measurements
Technically permissible maximum laden mass	[kg]	heavy lorries: technically permissible maximum laden mass of the rigid lorry or tractor (w/o trailer or semitrailer) all other vehicle classes: no entry
Axle ratio	[-]	axle transmission ratio (1) (2)
Gear ratio high speed	[-]	transmission ratio of gear engaged during high speed test (1) (4)
Gear ratio low speed	[-]	transmission ratio of gear engaged during low speed test (1) (4)
Anemometer height	[m]	height above ground of the measurement point of installed anemometer
Vehicle height	[m]	Medium and heavy rigid lorries and tractors: maximum vehicle height in accordance with 3.5.3.1 item vii. all other vehicle classes: no entry
Fixed transmission ratio in low speed test	[-]	"yes" / "no" (for vehicles which cannot drive with locked torque converter in the low speed test)

Input data	Unit	Remarks
Vehicle maximum speed	[km/h]	maximum speed the vehicle can be practically operated at the test track (3)
Torque meter drift left wheel	[Nm]	Average torque meter readings in accordance with point 3.5.3.9.
Torque meter drift right wheel	[Nm]	
Time stamp zeroing of torque meters	[s] since day start (of first day)	
Time stamp drift check torque meters		

(1) specification of transmission ratios with at least 3 digits after decimal separator
(2) if either the cardan speed signal or the average wheel speed signal is provided to the air drag pre-processing tool (see point 3.4.3; option 1 for vehicles with torque converters or option 2) the input parameter on axle ratio shall be set to "1 000"
(3) input only required if value is lower than 88 km/h
(4) if the average wheel speed is provided to the air drag pre-processing tool (see point 3.4.3 option 2) the input parameters on gear ratios shall be set to "1 000"';

(18) in point 3.9, Table 5, the tenth row is replaced by the following:

'Engine speed, cardan speed, average wheel speed or electric motor speed	<n_eng>,<n_card>, <n_wheel_ave> or <n_EM>	[rpm]	≥ 20 Hz	See provisions in point 3.4.3';

(19) in point 3.10.1.1(viii), the low speed test section is replaced by the following:

'Low speed test:

$$(T_{lms,avrg} - T_{grd}) \times (1 - \text{tol}) \leq (T_{lms,avrg} - T_{grd}) \leq (T_{lms,avrg} - T_{grd}) \times (1 + \text{tol})$$

$$T_{grd} = F_{grd,avrg} \times r_{dyn,avrg}$$

where:

$T_{lms,avrg}$ = average of T_{sum} per measurement section

T_{grd} = average torque from gradient force

$F_{grd,avrg}$ = average gradient force over measurement section

$r_{dyn,avrg}$ = average effective rolling radius over measurement section (formula see item xi) [m]

T_{sum} = $T_L + T_R$; sum of corrected torque values left and right wheel [Nm]

$T_{lm,avrg}$ = central moving average of T_{sum} with X_{ms} seconds time base

X_{ms} = time needed to drive 25 m distance at actual vehicle speed [s]

tol = relative torque tolerance: 0.5 for medium lorries and heavy lorries in groups 1s, 1 and 2; 0.3 for heavy lorries in other groups and heavy buses';

(20) in point 3.10.1.1(xi), the first sentence is replaced by the following:

‘plausibility check for engine speed, cardan speed or average wheel speed, whichever is applicable passed:’

(21) in point 3.10.1.1(xi), after the first sentence, the word ‘engine speed’ is replaced by ‘engine speed or average wheel speed’ in six instances;

(22) in point 3.11, the last paragraph is replaced by the following:

‘Several declared values $C_d \cdot A_{declared}$ can be created based on a single measured $C_d \cdot A_{cr}$ *(0)* as long as the family provisions in accordance with point 3.1 of Appendix 5 for medium and heavy lorries and with point 4.1 of Appendix 5 for heavy buses are fulfilled.’;

(23) in Appendix 2, Part 1, point 1.2 is replaced by the following:

‘1.2.0 Vehicle model / Commercial Name

1.2.1 Axle configuration

1.2.2 Technically permissible maximum laden mass

1.2.3 Cabin or model line

1.2.4 Cabin width (max. value in Y direction, for vehicles with a cabin)

1.2.5 Cabin length (max. value in X direction, for vehicles with a cabin)

1.2.6 Roof height (for vehicles with a cabin)

1.2.7 Wheel base

1.2.8 Height cabin over frame (for vehicles with a frame)

1.2.9 Frame height (for vehicles with a frame)

1.2.10 Aerodynamic accessories or add-ons (e.g. roof spoiler, side extender, side skirts, corner vanes)

1.2.11 Tyre dimensions front axle

1.2.12 Tyre dimensions driven axles(s)

1.2.13 Vehicle width in accordance with item (8) of point 2 of Annex III (for vehicles without a cabin)

1.2.14 Vehicle length in accordance with item (7) of point 2 of Annex III (for vehicles without a cabin)

1.2.15 Height of the integrated body in accordance with item (5) of point 2 of Annex III (for vehicles without a cabin)’;

(24) Appendix 3 is replaced by the following:

'Appendix 3

Vehicle height requirements for rigid lorries and tractors

1. Medium rigid lorries, heavy rigid lorries and tractors measured in the constant speed test in accordance with point 3 of this Annex have to meet the vehicle height requirements as shown in Table 2.
2. The vehicle height has to be determined as described in 3.5.3.1, item (vii).
3. Any kind of rigid lorries and tractors of vehicle groups not shown in Table 2 are not subject to constant speed testing.

Table 2

Vehicle height requirements for medium rigid lorries, heavy rigid lorries and tractors

Vehicle group	minimum vehicle height [m]	maximum vehicle height [m]
51, 53, 55	3,20	3,50
1s, 1	3,40	3,60
2	3,50	3,75
3	3,70	3,90
4	3,85	4,00
5	3,90	4,00
9	similar values as for rigid lorries with same technically permissible maximum laden mass (group 1, 2, 3 or 4)	
10	3,90	4,00';

(25) in Appendix 4, the heading is replaced by the following:

'**Standard body and semitrailer configurations for rigid lorries and tractors**';

(26) in Appendix 4, point 1 is replaced by the following:

'Medium rigid lorries and heavy rigid lorries which are subject to determination of air drag have to fulfil the requirements on standard bodies as described in this Appendix. Tractors have to fulfil the requirements for standard semitrailers as described in this Appendix.';

(27) in Appendix 4, point 2, Table 8 is replaced by the following:

'Table 3

Allocation of standard bodies and semitrailer for constant speed testing

Vehicle groups	Standard body or trailer
51, 53, 55	B-II
1s, 1	B1
2	B2
3	B3
4	B4

Vehicle groups	Standard body or trailer
5	ST1
9	depending on technically permissible maximum laden mass: 7,5 – 10 t: B1 > 10 – 12 t: B2 > 12 – 16 t: B3 > 16 t: B5
10	ST1';

(28) in Appendix 4, point 3 is replaced by the following:

'The standard bodies B-II, B1, B2, B3, B4 and B5 shall be constructed as a hard shell body in dry-out box design. They shall be equipped with two rear doors and without any side doors. The standard bodies shall not be equipped with tail lifts, front spoilers or side fairings for reduction of aerodynamic drag. The specifications of the standard bodies are given in:

Table 9a for standard body "B-II"

Table 9 for standard body "B1"

Table 10 for standard body "B2"

Table 11 for standard body "B3"

Table 12 for standard body "B4"

Table 13 for standard body "B5"

Mass indications as given in Table 9a to Table 15 are not subject to inspection for air drag testing.';

(29) in Appendix 4, point 5, the following table is inserted:

'Table 9a

Specifications of standard body "B-II"

Specification	Unit	External dimension (tolerance)	Remarks
Length	[mm]	4 500 (± 10)	
Width	[mm]	2 300 (± 10)	
Height	[mm]	2 500 (± 10)	box: external height: 2 380 longitudinal beam: 120
Corner radius side & roof with front panel	[mm]	30 - 80	
Corner radius side with roof panel	[mm]	30 - 80	
Remaining corners	[mm]	broken with radius ≤ 10	
Mass	[kg]	800	Mass is used as a generic value in the simulation tool and does not need to be verified for air drag testing';

(30) in Appendix 4, point 5, Tables 9, 10, 11, 12 and 13, fourth column, seventh row, the text is replaced by the following:

'Mass is used as a generic value in the simulation tool and does not need to be verified for air drag testing';

(31) in Appendix 5, the heading is replaced by the following:

'Air drag family';

(32) in Appendix 5, point 1, the third sentence is replaced by the following:

'The manufacturer may decide which vehicles belong to an air drag family as long as the membership criteria listed in point 3 for medium lorries, heavy lorries and point 6 for heavy buses are respected.';

(33) in Appendix 5, point 2, the second paragraph is replaced by the following:

'In addition to the parameters listed in point 4 of this Appendix for medium and heavy lorries and point 6.1 of this Appendix for heavy buses, the manufacturer may introduce additional criteria allowing the definition of families of more restricted size.';

(34) in Appendix 5, point 4, is replaced by the following:

'4. Parameter defining the air drag family for medium and heavy lorries';

(35) in Appendix 5, point 4.1, the first sentence is replaced by the following:

'Medium and heavy lorries are allowed to be grouped within a family if they belong to the same vehicle group according to Table 1 or Table 2 of Annex I and the following criteria are fulfilled:';

(36) in Appendix 5, point 4.1(c), the first sentence is replaced by the following:

'For vehicles with frame: Same height of cabin over frame.';

(37) in Appendix 5, point 5 is replaced by the following:

'5. Choice of the air drag parent vehicle for medium and heavy lorries';

(38) in Appendix 5, point 5.2 is replaced by the following:

'5.2. For medium rigid lorries, heavy rigid lorries and tractors the vehicle chassis shall fit to the dimensions of the standard body or semi-trailer as defined in Appendix 4 of this Annex.';

(39) in Appendix 5, point 5.4 is replaced by the following:

'5.4. The applicant for a certificate shall be able to demonstrate that the selection of the parent vehicle meets the provisions as stated in point 5.3. based on scientific methods e.g. computational fluid dynamics (CFD), wind tunnel results or good engineering practice. This provision applies for all vehicle variants which can be tested by the constant speed procedure as described in point 3 of this Annex. Other vehicle configurations (e.g. vehicle heights not in accordance with the provisions in Appendix 4, wheel bases not compatible with the standard body dimensions of Appendix 5) shall get the same air drag value as the testable parent within the family without any further demonstration. As tires are considered as part of the measurement equipment, their influence shall be excluded in proving the worst case scenario.'

(40) in Appendix 5, point 5.5 is replaced by the following:

'5.5. For heavy lorries the declared value $C_d \cdot A_{declared}$ can be used for creation of families in other vehicle groups if the family criteria in accordance with point 5 of this Appendix are met based on the provisions given in Table 16.

Table 16

Provisions for transfer of air drag values of heavy lorries to other vehicle groups

Vehicle group	Transfer formula	Remarks
1, 1s	Vehicle group 2 – 0,2 m^2	Only allowed if value for related family in group 2 was measured
2	Vehicle group 3 – 0,2 m^2	Only allowed if value for related family in group 3 was measured
3	Vehicle group 4 – 0,2 m^2	
4	No transfer allowed	
5	No transfer allowed	
9	Vehicle group 1,2,3,4 + 0,1 m^2	Applicable group for transfer has to match with TPMLM (technically permissible maximum laden mass). In the case of a TPMLM of > 16 tons: — group 4 shall be the basis for the transfer for group 9 — group 5 shall be the basis for the transfer for group 10 Transfer of already transferred values allowed.
10	Vehicle group 1,2,3,5 + 0,1 m^2	
11	Vehicle group 9	Transfer of already transferred values allowed
12	Vehicle group 10	Transfer of already transferred values allowed
16	Vehicle group 9 + 0,3 m^2	Transfer to already transferred values allowed';

(41) in Appendix 5, the following points are inserted:

'5.6. For medium lorries the declared value $C_d \cdot A_{declared}$ may be transferred for creation of families in other vehicle groups if the family criteria in accordance with point 5 of this Appendix are met and the provisions in Table 16a are fulfilled. The transfer shall be done by taking over the $C_d \cdot A_{declared}$ value unchanged from the origin group.

Table 16a

Provisions for transfer of air drag values of medium lorries to other vehicle groups

Vehicle group	Transfer allowed from vehicle group(s)
51	53
52	54
53	51
54	52

6. Parameter defining the air drag family for heavy buses:

6.1. Heavy buses are allowed to be grouped within a family if they belong to the same vehicle group according to Tables 4, 5 and 6 of Annex I and the following criteria are fulfilled:

(a) Vehicle width: All members of the family stay within a range of ± 50 mm to the parent vehicle. The body width shall be determined in accordance with the definitions as set out in Annex III.

(b) Height of the integrated body: All members of the family shall stay within the total range of 250 mm. The height of the integrated body shall be determined in accordance with the definitions as set out in Annex III.

(c) Vehicle length: All members of the family stay within a total range of 5 m. The length shall be determined in accordance with the definitions as set out in Annex III.

The fulfilment of the family concept requirements shall be demonstrated by computer-aided design data or drawings. The method of demonstration shall be chosen by the manufacturer.

7. Choice of the air drag parent vehicle for heavy buses

The parent vehicle of each family shall be selected in accordance with the following criteria:

7.1. All members of the family shall have an equal or lower air drag value than the value $C_d \cdot A_{declared}$ for the parent vehicle.

7.2 The applicant for a certificate shall be able to demonstrate that the selection of the parent vehicle meets the provisions as stated in 7.1. based on scientific methods e.g. computational fluid dynamics, wind tunnel results or good engineering practice. This demonstration shall cover the influence of roof mounted systems. As tires are considered as part of the measurement equipment, their influence shall be excluded in proving the worst case scenario.

7.3. The declared value $C_d \cdot A_{declared}$ can be used for creation of families in other sub-groups if the family criteria in accordance with point 1 of this Appendix are met, based on transfer functions or provisions in accordance with Table 16b. Multiple combinations of copy and transfer functions are allowed.

For vehicles of sub-groups labelled with "no" in the second column of Table 16b generic values for air drag are allocated automatically by the simulation tool.

Table 16b

Provisions for transfer of air drag values between the vehicle groups

Vehicle parameter sub-group	Air drag measurement allowed	Transfer allowed from vehicle group(s) and transfer formula for $C_d \cdot A_{declared}$	Transfer allowed from vehicle group(s) by taking over $C_d \cdot A_{declared}$ unchanged from the origin group
31a	no	not applicable	not applicable
31b1	no	not applicable	not applicable
31b2	only for interurban cycle	not applicable	32a, 32b, 32c, 32d, 33b2, 34a, 34b, 34c, 34d
31c	no	not applicable	not applicable
31d	no	not applicable	not applicable
31e	no	not applicable	not applicable

Vehicle parameter sub-group	Air drag measurement allowed	Transfer allowed from vehicle group(s) and transfer formula for $C_d \cdot A_{declared}$	Transfer allowed from vehicle group(s) by taking over $C_d \cdot A_{declared}$ unchanged from the origin group
32a	yes	not applicable	31b2, 32b, 32c, 32d, 34a, 34b, 34c, 34d
32b	yes	not applicable	31b2, 32a, 32c, 32d, 34a, 34b, 34c, 34d
32c	yes	not applicable	31b2, 32a, 32b, 32d, 34a, 34b, 34c, 34d
32d	yes	not applicable	31b2, 32a, 32b, 32c, 34a, 34b, 34c, 34d
32e	yes	not applicable	32f, 34e, 34f
32f	yes	not applicable	32e, 34e, 34f
33a	no	not applicable	not applicable
33b1	no	not applicable	not applicable
33b2	only for interurban cycle	vehicle group 31b2 + 0,1 m^2	34a, 34b, 34c, 34d, 35b2, 36a, 36b, 36c, 36d
33c	no	not applicable	not applicable
33d	no	not applicable	not applicable
33e	no	not applicable	not applicable
34a	yes	vehicle group 32a + 0,1 m^2	33b2, 34b, 34c, 34d, 35b2, 36a, 36b, 36c, 36d
34b	yes	vehicle group 32b + 0,1 m^2	33b2, 34a, 34c, 34d, 35b2, 36a, 36b, 36c, 36d
34c	yes	vehicle group 32c + 0,1 m^2	33b2, 34a, 34b, 34d, 35b2, 36a, 36b, 36c, 36d
34d	yes	vehicle group 32d + 0,1 m^2	33b2, 34a, 34b, 34c, 35b2, 36a, 36b, 36c, 36d
34e	yes	vehicle group 32e + 0,1 m^2	34f, 36e, 36f
34f	yes	vehicle group 32f + 0,1 m^2	34e, 36e, 36f
35a	no	not applicable	not applicable
35b1	no	not applicable	not applicable
35b2	only for interurban cycle	vehicle group 33b2 + 0,1 m^2	36a, 36b, 36c, 36d, 37b2, 38a, 38b, 38c, 38d
35c	no	not applicable	not applicable
36a	yes	vehicle group 34a + 0,1 m^2	35b2, 36b, 36c, 36d, 37b2, 38a, 38b, 38c, 38d

Vehicle parameter sub-group	Air drag measurement allowed	Transfer allowed from vehicle group(s) and transfer formula for $C_d \cdot A_{declared}$	Transfer allowed from vehicle group(s) by taking over $C_d \cdot A_{declared}$ unchanged from the origin group
36b	yes	vehicle group 34b + 0,1 m^2	35b2, 36a, 36c, 36d, 37b2, 38a, 38b, 38c, 38d
36c	yes	vehicle group 34c + 0,1 m^2	35b2, 36a, 36b, 36d, 37b2, 38a, 38b, 38c, 38d
36d	yes	vehicle group 34d + 0,1 m^2	35b2, 36a, 36b, 36c, 37b2, 38a, 38b, 38c, 38d
36e	yes	vehicle group 34e + 0,1 m^2	36f, 38e, 38f
36f	yes	vehicle group 34f + 0,1 m^2	36e, 38e, 38f
37a	no	not applicable	not applicable
37b1	no	not applicable	not applicable -
37b2	only for interurban cycle	vehicle group 33b2 + 0,1 m^2	38a, 38b, 38c, 38d, 39b2, 40a, 40b, 40c, 40d
37c	no	not applicable	not applicable
37d	no	not applicable	not applicable
37e	no	not applicable	not applicable
38a	yes	vehicle group 34a + 0,1 m^2	37b2, 38b, 38c, 38d, 39b2, 40a, 40b, 40c, 40d
38b	yes	vehicle group 34b + 0,1 m^2	37b2, 38a, 38c, 38d, 39b2, 40a, 40b, 40c, 40d
38c	yes	vehicle group 34c + 0,1 m^2	37b2, 38a, 38b, 38d, 39b2, 40a, 40b, 40c, 40d
38d	yes	vehicle group 34d + 0,1 m^2	37b2, 38a, 38b, 38c, 39b2, 40a, 40b, 40c, 40d
38e	yes	vehicle group 34e + 0,1 m^2	38f, 40e, 40f
38f	yes	vehicle group 34f + 0,1 m^2	38e, 40e, 40f
39a	no	not applicable	not applicable
39b1	no	not applicable	not applicable
39b2	only for interurban cycle	vehicle group 35b2 + 0,1 m^2	40a, 40b, 40c, 40d
39c	no	not applicable	not applicable
40a	yes	vehicle group 36a + 0,1 m^2	39b2, 40b, 40c, 40d
40b	yes	vehicle group 36b + 0,1 m^2	39b2, 40a, 40c, 40d
40c	yes	vehicle group 36c + 0,1 m^2	39b2, 40a, 40b, 40d
40d	yes	vehicle group 36d + 0,1 m^2	39b2, 40a, 40b, 40c
40e	yes	vehicle group 36e + 0,1 m^2	40f
40f	yes	vehicle group 36f + 0,1 m^2	40e’

(42) in Appendix 6, point 3 is replaced by the following:

'3. The number of vehicles to be tested for conformity with the certified CO_2 emissions and fuel consumption related properties per year of production shall be determined based on Table 17. The table shall be applied separately to medium lorries, heavy lorries and heavy buses.

Table 17

Number of vehicles to be tested for conformity with the certified CO_2 emissions and fuel consumption related properties per year of production

(to be applied separately for medium lorries, heavy lorries and heavy buses)

Number of CoP tested vehicles	Schedule	Number of CoP relevant vehicles produced the year before
0	—	≤ 25
1	every 3rd year (*)	25 < X ≤ 500
1	every 2nd year	500 < X ≤ 5 000
1	every year	5 000 < X ≤ 15 000
2	every year	≤ 25 000
3	every year	≤ 50 000
4	every year	≤ 75 000
5	every year	≤ 100 000
6	every year	100 001 and more

(*) The CoP test shall be performed within the first two years

For the purpose of establishing the production numbers, only air drag data which fall under the requirements of this Regulation and which did not get standard air drag values according to Appendix 7 of this Annex shall be considered.';

(43) in Appendix 6, point 4.6 is replaced by the following:

'4.6. A first vehicle to be tested for conformity with the certified CO_2 emissions and fuel consumption related properties shall be selected from the air drag type or air drag family representing the highest production numbers in the corresponding year. Any additional vehicles shall be selected from all air drag families and shall be agreed between the manufacturer and the approval authority based on the air drag families and vehicle groups already tested. If only one test per year or less has to be executed, the vehicle shall always be selected from all air drag families and shall be agreed between the manufacturer and the approval authority.';

(44) Appendix 7 is replaced by the following:

'Appendix 7

Standard values

This Appendix describes standard values for the declared air drag value $C_d \cdot A_{declared}$. Where standard values are applied, no input data on air drag shall be provided to the simulation tool. In this case, the standard values are allocated automatically by the simulation tool.

1. Standard values for heavy lorries are defined in accordance with Table 18.

Table 18

Standard values for $C_d \cdot A_{declared}$ for heavy lorries

Vehicle group	Standard value $C_d \cdot A_{declared}$ [m^2]
1, 1s	7,1
2	7,2
3	7,4
4	8,4
5	8,7
9	8,5
10	8,8
11	8,5
12	8,8
16	9,0

2. —

3. —

4. Standard values for heavy buses are defined in accordance with Table 21. For vehicle groups for which no measurement of aerodynamic drag is allowed (in accordance with point 7.3. in Appendix 5 of this Annex), standard values are not relevant.

Table 21

Standard values for $C_d \cdot A_{declared}$ for heavy buses

Vehicle parameter sub-group	Standard value $C_d \cdot A_{declared}$ [m^2]
31a	not relevant
31b1	not relevant
31b2	4,9
31c	not relevant
31d	not relevant
31e	not relevant
32a	4,6
32b	4,6

Vehicle parameter sub-group	Standard value $C_d \cdot A_{declared}$ [m^2]
32c	4,6
32d	4,6
32e	5,2
32f	5,2
33a	not relevant
33b1	not relevant
33b2	5,0
33c	not relevant
33d	not relevant
33e	not relevant
34a	4,7
34b	4,7
34c	4,7
34d	4,7
34e	5,3
34f	5,3
35a	not relevant
35b1	not relevant
35b2	5,1
35c	not relevant
36a	4,8
36b	4,8
36c	4,8
36d	4,8
36e	5,4
36f	5,4
37a	not relevant
37b1	not relevant
37b2	5,1
37c	not relevant
37d	not relevant
37e	not relevant
38a	4,8

Vehicle parameter sub-group	Standard value $C_d \cdot A_{declared}$ [m^2]
38b	4,8
38c	4,8
38d	4,8
38e	5,4
38f	5,4
39a	not relevant
39b1	not relevant
39b2	5,2
39c	not relevant
40a	4,9
40b	4,9
40c	4,9
40d	4,9
40e	5,5
40f	5,5

5. Standard values for medium lorries are defined in accordance with Table 22.

Table 22

Standard values for $C_d \cdot A_{declared}$ for medium lorries

Vehicle group	Standard value $C_d \cdot A_{declared}$ [m^2]
53	5,8
54	2,5';

(45) in Appendix 8, the heading text is replaced by the following:

'Markings

In the case of a vehicle being certified in accordance with this Annex, the cabin or the bodywork shall bear:';

(46) in Appendix 8, point 1.4 is replaced by the following:

'The certification mark shall also include in the vicinity of the rectangle the "base certification number" as specified for Section 4 of the type-approval number set out in Annex I to Regulation (EU) 2020/683 preceded by the two figures indicating the sequence number assigned to the latest technical amendment to this Regulation and by a character "P" indicating that the approval has been granted for airdrag.

For this Regulation the sequence number shall be 02.';

(47) in Appendix 8, point 1.4.1 is replaced by the following:

'Example and dimensions of the certification mark

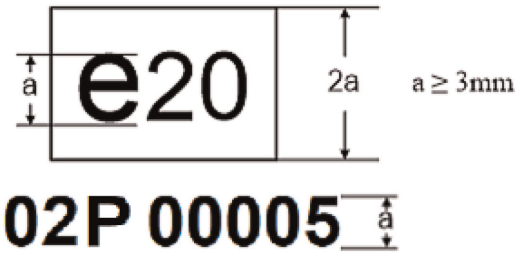

The above certification mark affixed to a cabin shows that the type concerned has been certified in Poland (e20), pursuant to this Regulation. The first two digits (02) are indicating the sequence number assigned to the latest technical amendment to this Regulation. The following letter indicates that the certificate was granted for air drag (P). The last five digits (00005) are those allocated by the approval authority for the air drag as the base certification number.';

(48) in Appendix 8, point 2.1 is replaced by the following:

'Certification number for air drag shall comprise the following:

eX*YYYY/YYYY*ZZZZ/ZZZZ*P*00000*00

section 1	section 2	section 3	Additional letter to section 3	section 4	section 5
Indication of country issuing the certificate	HDV CO_2 determination Regulation "2017/2400"	Latest amending Regulation (ZZZZ/ZZZZ)	P = Air drag	Base certification number 00000	Extension 00';

(49) in Appendix 9, Table 1, the seventh row is replaced by the following:

'TransferredCdxA	P246	double, 2	[m^2]	CdxA_0 transferred to related families in other vehicle groups in accordance with Table 16 of Appendix 5 for heavy lorries, Table 16a of Appendix 5 for medium lorries and Table 16b of Appendix 5 for heavy buses. Where no transfer rule was applied, CdxA_0 shall be provided.'.

ANNEX IX

'ANNEX IX

VERIFYING LORRY AND BUS AUXILIARY DATA

1. Introduction

This Annex describes the provisions regarding declaration of technologies and other relevant input information on auxiliary systems for heavy duty vehicles for the purpose of the determination of vehicle specific CO_2 emissions.

The power consumption of the following auxiliary types shall be considered within the simulation tool by using technology specific average generic models for power consumption:

(a) Engine cooling fan

(b) Steering system

(c) Electric system

(d) Pneumatic system

(e) Heating, ventilation and air conditioning (HVAC) system

(f) Transmission Power Take Off (PTO)

The generic values are integrated in the simulation tool and automatically used based on the relevant input information in accordance with the provisions in this Annex. The related input data formats for the simulation tool are described in Annex III. For a clear reference, the three-digit parameter IDs used in Annex III are also listed in this Annex.';

2. Definitions

For the purposes of this Annex the following definitions shall apply. The related auxiliary type is stated in brackets.

(1) "crankshaft mounted" fan means a fan installation where the fan is driven in the prolongation of the crankshaft, often by a flange (engine cooling fan);

(2) "belt or transmission driven" fan means a fan that is installed in a position where additional belt, tension system or transmission is needed (engine cooling fan);

(3) "hydraulic driven" fan means a fan propelled by hydraulic oil, often installed away from the engine. A hydraulic system with oil system, pump and valves are influencing losses and efficiencies in the system (engine cooling fan);

(4) "electrically driven" fan means a fan propelled by an electric motor. The efficiency for complete energy conversion, included in/out from battery, is considered (engine cooling fan);

(5) "electronically controlled visco clutch" means a clutch in which a number of sensor inputs together with SW logic are used to electronically actuate the fluid flow in the visco clutch (engine cooling fan);

(6) "bimetallic controlled visco clutch" means a clutch in which a bimetallic connection is used to convert a temperature change into mechanical displacement. The mechanical displacement is then working as an actuator for the visco clutch (engine cooling fan);

(7) "discrete step clutch" means a mechanical device where the grade of actuation can be made in distinct steps only (not continuous variable) (engine cooling fan);

(8) "on/off clutch" means a mechanical clutch which is either fully engaged or fully disengaged (engine cooling fan);

(9) "variable displacement pump" means a device that converts mechanical energy to hydraulic fluid energy. The amount of fluid pumped per revolution of the pump can be varied while the pump is running (engine cooling fan);

(10) "constant displacement pump" means a device that converts mechanical energy to hydraulic fluid energy. The amount of fluid pumped per revolution of the pump cannot be varied while the pump is running (engine cooling fan);

(11) "electric motor control" means the use of an electric motor to propel the fan. The electrical machine converts electrical energy into mechanical energy. Power and speed are controlled by conventional technology for electric motors (engine cooling fan);

(12) "fixed displacement pump (default technology)" means a pump having an internal limitation of the flow rate (steering system);

(13) "fixed displacement pump with electronic control" means a pump using an electronic control of the flow rate (steering system);

(14) "dual displacement pump" means a pump with two chambers (with the same or different displacement) mechanical internal limitation of flow rate (steering system);

(14a) "dual displacement pump with electronic control" means a pump with two chambers (with the same or different displacement) which can be combined or where under specific conditions only one of these is used. The flow rate is electronically controlled by a valve (steering system);

(15) "variable displacement pump mech. controlled" means a pump where the displacement is mechanically controlled internally (internal pressure scales) (steering system);

(16) "variable displacement pump elec. controlled" means a pump where the displacement is electronically controlled (steering system);

(17) "electric driven pump" means a steering system driven by an electric motor with continuously recirculating hydraulic fluid (steering system);

(17a) "full electric steering gear" means a steering system driven by an electric motor without continuously recirculating hydraulic fluid (steering system);

(18) -

(19) "air compressor with energy saving system" or "ESS" means a compressor reducing the power consumption during blow off, e.g. by closing intake side, ESS is controlled by system air pressure (pneumatic system);

(20) "compressor clutch (visco)" means a disengageable compressor where the clutch is controlled by the system air pressure (no smart strategy), minor losses during disengaged state caused by visco clutch (pneumatic system);

(21) "compressor clutch (mechanically)" means a disengageable compressor where the clutch is controlled by the system air pressure (no smart strategy) (pneumatic system);

(22) "air management system with optimal regeneration" or "AMS" means an electronic air processing unit that combines an electronically controlled air dryer for optimised air regeneration and an air delivery preferred during overrun conditions (requires a clutch or ESS) (pneumatic system).

(23) "light emitting diode" or "LED" means semiconductor devices that emit visible light when an electrical current passes through them (electric system);

(24) -

(25) "power take-off" or "PTO" means a device on a transmission or an engine to which an optional power consuming device ("consumer"), e.g., a hydraulic pump, can be connected; a power take-off is usually optional (PTO);

(26) "power take-off drive mechanism" means a device in a transmission that allows the installation of a power take-off (PTO);

(26a) "engaged gearwheel" means a gearwheel which is engaged with running shafts of either the engine or transmission while the PTO clutch (if applicable) is open (PTO);

(27) "tooth clutch" means a (manoeuvrable) clutch where torque is transferred mainly by normal forces between mating teeth. A tooth clutch can either be engaged or disengaged. It is operated in load-free conditions only (e.g. at gear shifts in a manual transmission) (PTO);

(28) "synchroniser" means a type of tooth clutch where a friction device is used to equalise the speeds of the rotating parts to be engaged (PTO);

(29) "multi-disc clutch" means a clutch where several friction linings are arranged in parallel whereby all friction pairs get the same pressing force. Multi-disc clutches are compact and can be engaged and disengaged under load. They may be designed as dry or wet clutches (PTO);

(30) "sliding wheel" means a gearwheel used as shift element where the shifting is realised by moving the gearwheel on its shaft into or out of the gear mesh of the mating gear (PTO);

(31) "discrete step clutch (off + 2 stages)" means a mechanical device where the grade of actuation can be made in two distinct steps plus off only (not continuous variable) (engine cooling fan);

(32) "discrete step clutch (off + 3 stages)" means a mechanical device where the grade of actuation can be made in three distinct steps plus off only (not continuous variable) (engine cooling fan);

(33) "ratio compressor to engine" means the forward gear ratio of the speed of the engine to the speed of the air compressor without slip ($i = n_{in}/n_{out}$) (pneumatic system);

(34) "air suspension control mechanically" means an air supension system in which the air suspension control valves are operated mechanically without electronics and software (pneumatic system);

(35) "air suspension control electronically" means an air supension system in which a number of sensor inputs together with software logic are used to electronically actuate the air suspension control valves (pneumatic system);

(36) "pneumatic SCR reagent dosing" means that compressed air is used for dosing reagent into the exhaust system (pneumatic system);

(37) "door drive technology pneumatic" means that the passenger doors of the vehicle are operated with compressed air (pneumatic system);

(38) "door drive technology electric" means that the passenger doors of the vehicle are operated with an electric motor or with an electrohydraulic system (pneumatic system);

(39) "door drive technology mixed" means that both "door drive technology pneumatic" and "door drive technology electric" are installed in the vehicle (pneumatic system);

(40) "smart regeneration system" means a pneumatic system in which the regeneration air demand is optimised with respect to the quantity of dried air that is produced (pneumatic system);

(41) "smart compression system" means a pneumatic system in which the air delivery is electronically controlled with preferred air delivery during overrun conditions (pneumatic system);

(42) "interior lights" means the lights within the passenger compartment that are installed to fulfil the requirements of paragraph 7.8. (artificial interior lighting) in Annex 3 to UN Regulation No. 107 (*) (electric system);

(43) "day running lights" means the "daytime running lamp" in accordance with paragraph 2.7.25 of UN Regulation No. 48 (**) (electric system);

(44) "position lights" means the "side marker lamp" in accordance with paragraph 2.7.24 of UN Regulation No. 48 (electric system);

(45) "brake lights" means the "stop lamp" in accordance with paragraph 2.7.12 of UN Regulation No. 48 (electric system);

(46) "headlights" means the "passing-beam (dipped-beam) headlamp" in accordance with paragraph 2.7.10 of UN Regulation No. 48, and the "driving-beam (main-beam) headlamp" in accordance with paragraph 2.7.9 of UN Regulation No. 48 (electric system);

(47) "alternator" means an electric machine to charge the battery and to supply electric power to the electrical auxiliary system when the vehicle's internal combustion engine is running. An alternator can not contribute to propulsion of the vehicle (electric system);

(48) "smart alternator system" means a system of one ore more alternators in combination with one or more dedicated REESS which is electronically controlled with preferred generation of electic energy during overrun conditions (electric system);

(49) "heating, ventilation and air conditioning system" or HVAC system means a system that can actively heat and/or actively cool down and exchange or replace air to provide improved air qualityfor the passenger and/or the driver compartment (HVAC system);

(50) "HVAC system configuration" means a combination of HVAC system components in accordance with Table 13 of this Annex (HVAC system);

(51) "thermal comfort system for passenger compartment" means a system that uses fans to circulate air within the vehicle or blows fresh air into the vehicle and the air volume flow can at least be actively cooled or heated. The air is distributed from the roof of the vehicle and in the case of double deckers, in both floors. In the case of open top double deckers, in the lower deck (HVAC system);

(52) "number of heat pumps for passenger compartment" means the number of heat pumps that are installed in the vehicle to heat up and/or cool down cabin air or fresh air supplied to the passenger compartment. If a heat pump is used for the passenger and for the driver compartment it is counted for the passenger compartment only (HVAC system). If different heat pumps for heating and cooling are installed, the number of heat pumps shall be defined by the lower number of both separate cases – i.e. the number of heat pumps for cooling and the number of heat pumps for heating shall be considered separately (e.g. in the case of 2 heat pumps for cooling and 1 heat pump for heating: only 1 heat pump shall be considered);

(53) "air conditioning system for driver compartment" means that a system is installed in the vehicle that can cool down the cabin air or fresh air supplied to the driver or driver compartment (HVAC system);

(54) "air conditioning system for passenger compartment" means that a system is installed in the vehicle that can cool down the cabin air or fresh air supplied to the passenger compartment (HVAC system);

(55) "independent heat pump for driver compartment" means that a heat pump is installed in the vehicle that is only used for the driver compartment (HVAC system);

(56) "heat pump 2-stage" means a heat pump where the grade of actuation can be made in two steps only but not continuous variable (HVAC system);

(57) "heat pump 3-stage" means a heat pump where the grade of actuation can be made in three steps only but not continuous variable (HVAC system);

(58) "heat pump 4-stage" means a heat pump where the grade of actuation can be made in four steps only but not continuous variable (HVAC system);

(59) "heat pump continuous" means a heat pump where the grade of actuation is continuously variable or where the air conditioning compressor is driven by an electric motor with continuously variable speed (HVAC system);

(60) "auxiliary heater power" as stated on the label defined in paragraph 4 of Annex 7 to UN Regulation No. 122 (***) (HVAC system);

(61) "double glazing" means windows of the passenger compartment that consist of two glass window panes that are separated by gas filled space or by vacuum. In the case of several types of windows within the passenger compartment, the predominant window type with regards to surface area has to be selected. For the assessment of the predominant window type the windscreen, the rear window, the driver side-window(s), windows within doors, windows above and in front of the front axle (see Figure 1 for examples) as well as tiltable windows, shall not be considered (HVAC system);

Figure 1

Windows not to be considered for predominant window type

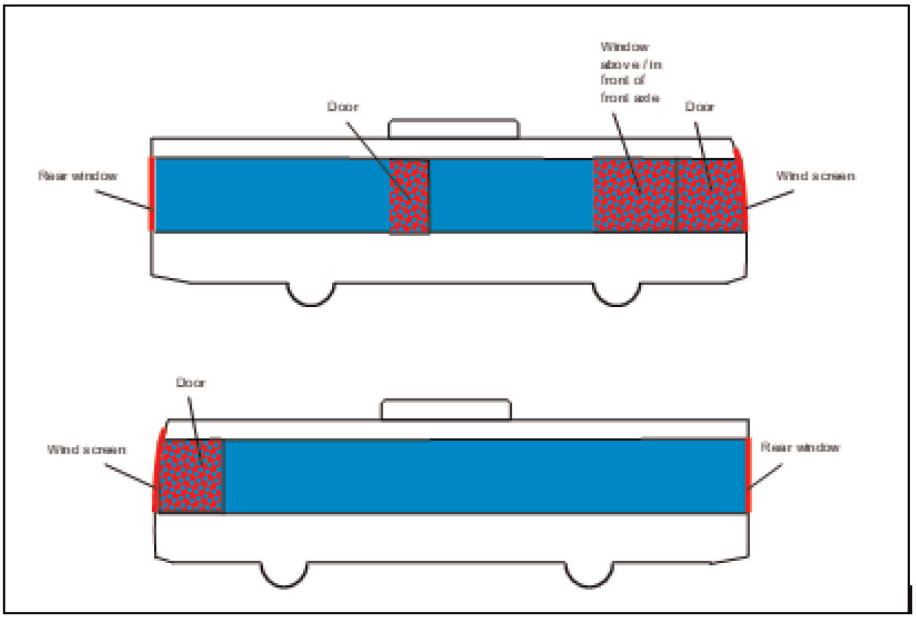

(62) "heat pump" means a system that uses a refrigerant in a circular process to transfer thermal energy from the environment to the passenger compartment and/or the driver compartment and/or transfers thermal energy in the opposite direction (cooling and/or heating functionality) with a coefficient of performance larger than 1 (HVAC system);

(63) "R-744 heat pump" means a heat pump which uses R-744 refrigerant as working medium (HVAC system);

(64) "non R-744 heat pump" means a heat pump which uses another working medium than R-744 refrigerant. For the possible grade of actuation (2-stage, 3-stage, 4-stage, continuous), the definitions (56) to (59) shall apply (HVAC system);

(65) "adjustable coolant thermostat" means a coolant thermostat which characteristics are influenced by at least one additional input besides the coolant temperature, e.g. active electric heating of the thermostat (HVAC system);

(66) "adjustable auxiliary heater" means a fuel-operated heater with at least 2 levels of heating capacity besides "off" that can be controlled depending on the required heating system capacity in the bus (HVAC system);

(67) "engine waste gas heat exchanger" means a heat exchanger that uses the thermal energy of engine waste gas to heat the cooling circuit (HVAC system);

(68) "separate air distribution ducts" means one or multiple air channels connected to a thermal comfort system to distribute conditioned air evenly to the passenger compartment. Air channels may include loud speakers or HVAC water supply and electric harness. Reservoirs for compressed airs shall not be installed within this/these channel/s. By this model parameter the simulation tool considers reduced heat transfer losses to the ambient or components within the channel. For HVAC configurations 8, 9 and 10 in vehicle groups 31, 33, 35, 37 and 39, this input shall be set to "true" as those configurations benefit from reduced losses as cooled air is directly blown into vehicle interior even without any air channel. For all HVAC configurations in vehicle groups 32, 34, 36, 38 and 40 this parameter shall be set to "true" as this is state-of-the-art (HVAC system);

(69) "electrically driven compressor" means a compressor driven by an electric motor (pneumatic system);

(70) "water electric heater" means a device using electric energy to heat up the coolant of the vehicle with a coefficient of performance lower than 1 and that is actively used for the heating functionality during vehicle operation on road (HVAC system);

(71) "air electric heater" means a device using electric energy to heat up the air of the passenger and/or driver compartment with a coefficient of performance lower than 1 (HVAC system);

(72) "other heating technology" means any fully electric technology used for heating up the passenger and/or driver compartment not covered by the technologies in definitons (62), (70) or (71) (HVAC system);

(73) "lead-acid battery – conventional" means a lead-acid battery where none of the definitions (74) or (75) applies (electric system);

(74) "lead-acid battery –AGM" (Absorbed Glass Mat) means lead-acid batteries where glass fibre mats soaked in electrolyte are used as separators between the negative and positive plates (electric system);

(75) "lead-acid battery – gel" means lead-acid batteries where a silica gelling agent is mixed into the electrolyte (electric system);

(76) "Li-ion battery - high power" means a Li-ion battery where the numerical ratio between rated maximum current in [A] and the rated capacity in [Ah] is equal to or larger than 10 (electric system);

(77) "Li-ion battery - high energy" means a Li-ion battery where the numerical ratio between rated maximum current in [A] and the rated capacity in [Ah] is less than 10 (electric system);

(78) "capacitor with DC/DC converter" means an (ultra) capacitor electrical energy storage unit combined with a DC/DC unit that adapts the voltage level and controls the current to and from the electric consumer board net (electric system);

(79) "articulated bus" means a heavy bus that is an incomplete vehicle, complete vehicle or completed vehicle consisting of at least two rigid sections connected to each other by an articulated section. Connection and disconnection of the sections are to be possible only in a workshop. For the complete or completed heavy buses of this type of vehicle, the articulated section shall permit the free movement of travellers between the rigid sections.

3. Description of auxiliary relevant input information into the simulation tool

3.1. Engine cooling fan

The information on engine cooling fan technology shall be provided based on the applicable combinations of fan drive and fan control technology as described in Table 4 below.

If a new technology within a fan drive cluster (e.g. crankshaft mounted) cannot be found in the list, the technology allocated to "default for fan drive cluster" shall be provided.

If a new technology cannot be found in any fan drive cluster the technology allocated to "default overall" shall be provided.

Table 4

Engine cooling fan technologies (P181)

Fan drive cluster	Fan control	Medium and heavy lorries	Heavy buses
Crankshaft mounted	Electronically controlled visco clutch	X	X
	Bimetallic controlled visco clutch	X (DC)	X
	Discrete step clutch	X	
	Discrete step clutch (off + 2 stages)		X
	Discrete step clutch (off + 3 stages)		X
	On/off cluch	X	X (DC, DO)
Belt driven or driven via transmission	Electronic controlled visco clutch	X	X
	Bimetallic controlled visco clutch	X (DC)	X
	Discrete step clutch	X	
	Discrete step clutch (off + 2 stages)		X
	Discrete step clutch (off + 3 stages)		X
	On/off cluch	X	X (DC)
Hydraulically driven	Variable displacement pump	X	X
	Constant displacement pump	X (DC, DO)	X (DC)
Electrically driven	Electric motor control	X (DC)	X (DC)

X: applicable, DC: default for fan drive cluster, DO: default overall

3.2. Steering system

The technology of the steering system shall be provided in accordance with Table 5 per each active steered axle on the vehicle.

If a new technology within a steering technology cluster (e.g. mechanically driven) cannot be found in the list, the technology allocated to "default for steering technology cluster" shall be provided. If a new technology cannot be found in any steering technology cluster the technology allocated to "default overall" shall be provided.

Table 5

Steering system technologies (P182)

Steering technology cluster	Technology	Medium and heavy lorries	Heavy buses
Mechanically driven	Fixed displacement	X (DC, DO)	X (DC, DO)
	Fixed displacement, electronical control	X	X
	Dual displacement pump	X	X
	Dual displacement pump with electronic control	X	X
	Variable displacement, mechanical control	X	X
	Variable displacement, electronical control	X	X
Electric	Electric driven pump	X (DC)	X (DC)
	Full electric steering gear	X	X

X: applicable, DC: default for steering technology cluster, DO: default overall

3.3. Electric System

3.3.1. Medium lorries and heavy lorries

The technology of the electric system shall be provided in accordance with

Table 6.

If the technology used in the vehicle is not listed, "standard technology" shall be provided to the simulation tool.

Table 6

Electric system technologies for medium lorries and heavy lorries (P183)

Technology
Standard technology
Standard technology - LED headlights

3.3.2. Heavy buses

The technology of the electric system shall be provided in accordance with Table 7.

Table 7

Electric system technologies for heavy buses

Electric system cluster	Parameter	Parameter (ID)	Input to the simulation tool	Explanations
Alternator	Alternator technology	P294	conventional / smart / no alternator	"smart" shall be declared for systems fulfilling the definitions as given in point 2(48); "no alternator" is applicable for HEVs which do not have an alternator in the electric auxiliary system. For PEVs no input is required.
	Smart alternator – maximum rated current	P295	value in [A]	Maximum rated current at nominal speed in accordance with manufacturer's labelling or data sheet, or measured in accordance with standard ISO 8854:2012 Input per smart alternator
	Smart alternator – rated voltage	P296	value in [V]	Allowed values: "12", "24", "48" Input per smart alternator
Batteries for smart alternator systems	Technology	P297	lead-acid battery – conventional / lead-acid battery – AGM / lead-acid battery – gel / li-ion battery - high power / li-ion battery - high energy	Input per battery charged by smart alternator system If a battery technology cannot be found in the list, the technology "Lead-acid battery – Conventional" shall be provided as input.
	Nominal voltage	P298	value in [V]	Allowed values: "12", "24", "48" Input per battery charged by smart alternator system Where batteries are configured in series (e.g. two 12V units for a 24V system), the actual nominal voltage of the single battery units (12V in this example) shall be provided.
	Rated capacity	P299	value in [Ah]	Capacity in Ah in accordance with manufacturer's labelling or data sheet Input per battery charged by smart alternator system

Electric system cluster	Parameter	Parameter (ID)	Input to the simulation tool	Explanations
Capacitors for smart alternator systems	Technology	P300	with DC/DC converter	Input per battery charged by smart alternator system
	Rated capacitance	P301	value in [F]	Capacitance in Farad (F) in accordance with manufacturer's labelling or data sheet Input per capacitor charged by smart alternator system
	Rated voltage	P302	value in [V]	Rated operating voltage in accordance with manufacturer's labelling or data sheet Input per capacitor charged by smart alternator system
Auxiliary electric energy supply	Supply of electric auxiliaries from HEV REESS possible	P303	true / false	To be set to "true" if the vehicle is equipped with a controlled power link that enables transfer of electric energy from a HEV propulsion energy storage system to the electric consumer board net. Input only required for HEV.
Interior lights	Interior lights LED	P304	true / false	Parameters shall only be set to true if all lights of the category are in line with the definitions set out in points 2(42) to 2(46).
Exterior lights	Day running lights LED	P305	true / false	
	Position lights LED	P306	true / false	
	Brake lights LED	P307	true / false	
	Headlights LED	P308	true / false	

3.4. Pneumatic system

3.4.1. Pneumatic systems working with over pressure

3.4.1.1. Size of air supply

For pneumatic systems working with over pressure the size of air supply shall be provided in accordance with Table 8.

Table 8

Pneumatic systems with over pressure – size of air supply

Size of air supply	Medium and heavy lorries (part of P184)	Heavy buses (P309)
Small displacement ≤ 250 cm^3; 1 cylinder / 2 cylinder	X	X

Size of air supply	Medium and heavy lorries (part of P184)	Heavy buses (P309)
Medium 250 cm^3 < displacement ≤ 500 cm^3; 1 cylinder / 2 cylinder 1-stage	X	X
Medium 250cm^3 < displacement ≤ 500 cm^3; 1 cylinder / 2 cylinder 2-stage	X	X
Large displacement > 500 cm^3; 1 cylinder / 2 cylinder 1-stage / 2-stage	X, DO	
Large displacement > 500 cm^3; 1-stage		X, DO
Large displacement > 500 cm^3; 2-stage		X

In the case of a two-stage compressor, the displacement of the first stage shall be used to describe the size of the air compressor system. In the case of non-piston compressors, the "default overall" (DO) technology shall be declared.

In the case of heavy buses with electrically driven compressors, "not applicable" shall be provided as input for size of air supply as this parameter is not considered by the simulation tool.

3.4.1.2. Fuel saving technologies

Fuel saving technologies shall be provided in accordance with the combinations as listed in Table 9 for medium and heavy lorries in Table 10 for heavy buses.

Table 9

Pneumatic systems with over pressure – fuel saving technologies for heavy lorries, medium lorries (part of P184)

Combination No	Compressor drive	Compressor clutch	Air compressor with Energy Saving System (ESS)	Air Management System with optimal regeneration (AMS)
1	mechanically	no	no	no
2	mechanically	no	yes	no
3	mechanically	visco	no	no
4	mechanically	mechanically	no	no
5	mechanically	no	yes	yes
6	mechanically	visco	no	yes

Combination No	Compressor drive	Compressor clutch	Air compressor with Energy Saving System (ESS)	Air Management System with optimal regeneration (AMS)
7	mechanically	mechanically	no	yes
8	electrically	no	no	no
9	electrically	no	no	yes

Table 10

Pneumatic systems with over pressure – fuel saving technologies for heavy buses

Combination No	Compressor drive (P310)	Compressor clutch (P311)	Smart regeneration system (P312)	Smart compression system (P313)
1	mechanically	no	no	no
2	mechanically	no	yes	no
3	mechanically	no	no	yes
4	mechanically	no	yes	yes
5	mechanically	visco	no	no
6	mechanically	visco	yes	no
7	mechanically	visco	no	yes
8	mechanically	visco	yes	yes
9	mechanically	mechanical	no	no
10	mechanically	mechanical	yes	no
11	mechanically	mechanical	no	yes
12	mechanically	mechanical	yes	yes

Combination No	Compressor drive (P310)	Compressor clutch (P311)	Smart regeneration system (P312)	Smart compression system (P313)
13	electrically	no	no	no
14	electrically	no	yes	no

3.4.1.3. Further characteristics of the pneumatic system for heavy buses

For heavy buses the information on further characteristics of the pneumatic system shall be provided in accordance with Table 11.

Table 11

Further characteristics of the pneumatic system for heavy buses

Parameter	Parameter ID	Input to the simulation tool	Explanations
Ratio compressor to engine	P314	value in [-]	Ratio = compressor speed / engine speed. Only applicable in the case of mechanically driven compressor
Entrance height in non-kneeled position	P290	value in [mm]	In accordance with the definitions as set out in point 2(10) of Annex III. Documentation of this value shall be given by vehicle setup drawings used during parametrisation of the air suspension control of the vehicle. Value shall represent the state as delivered to the customer as normal ride height. This parameter is only relevant for heavy buses.
Air suspension control	P315	mechanically / electronically	
Pneumatic SCR reagent dosing	P316	true / false	See point 2(36)
Door drive technology	P291	pneumatic / mixed / electric	

3.4.2. Pneumatic systems working with vacuum

For vehicles with pneumatic systems working with vacuum (relative negative pressure) either “Vacuum pump” or “Vacuum pump + elec. driven” shall be provided as input to the simulation tool (P184). This technology is not applicable for heavy buses.

3.5. HVAC system

3.5.1. HVAC system for medium lorries and heavy lorries

The technology of the HVAC system shall be provided in accordance with Table 12.

Table 12

HVAC system technologies for medium lorries and heavy lorries (P185)

Technology
None (no air conditioning system for driver compartment)
Default

3.5.2. HVAC system for heavy buses

The HVAC system configuration shall be provided in accordance with the definitions set out in Table 13. A graphical representation of the different configurations is given in Figure 2.

Table 13

HVAC system configuration for heavy buses (P317)

HVAC system configuration	Thermal comfort system for passenger compartment	Number of heat pumps for passenger compartment in accordance with (52) of point 2		Driver compartment supplied by heat pump(s) for passenger compartment	Independent heat pump(s) for driver compartment
		Rigid	Articu-lated		
1	No	0	0	No	No
2	No	0	0	No	Yes
3	Yes	0	0	No	No
4	Yes	0	0	No	Yes
5	Yes	1	1 or 2	No	No
6	Yes	1	1 or 2	Yes	No
7	Yes	1	1 or 2	No	Yes
8	Yes	> 1	> 2	No	No
9	Yes	> 1	> 2	No	Yes
10	Yes	> 1	> 2	Yes	No

Figure 2

HVAC system configuration for heavy buses (Rigid and Articulated)

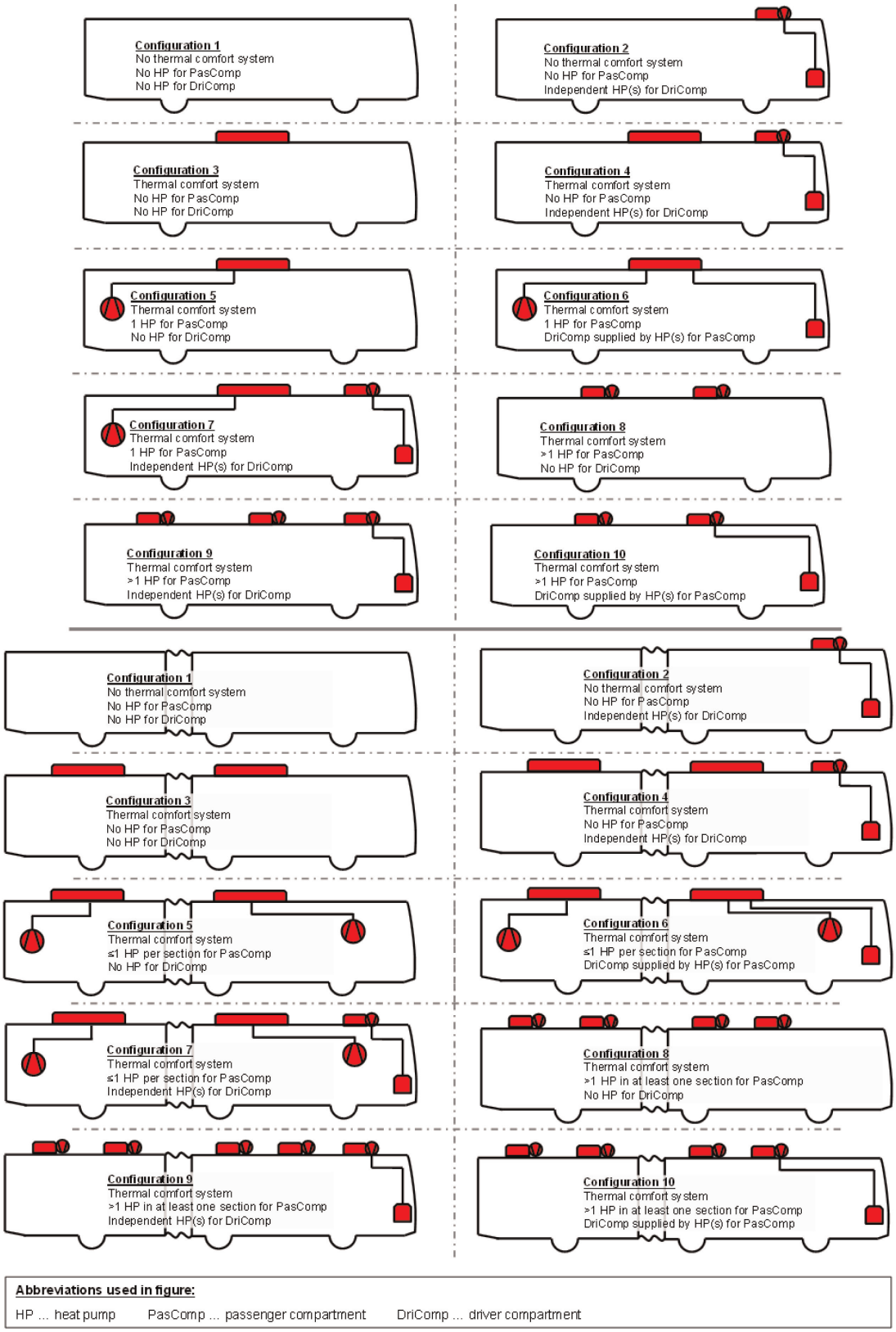

The HVAC system parameters shall be declared in accordance with Table 14.

Table 14

HVAC system parameters (heavy buses)

Parameter	Parameter ID	Input to the simulation tool	Explanations
Heat pump type for cooling driver compartment	P318	none / not applicable / R-744 / non R-744 2-stage / non R-744 3-stage / non R-744 4-stage / non R-744 continuous	"not applicable" shall be declared for HVAC system configurations 6 and 10 due to supply from passenger heat pump
Heat pump type for heating driver compartment	P319	none / not applicable / R-744 / non R-744 2-stage / non R-744 3-stage / non R-744 4-stage / non R-744 continuous	"not applicable" shall be declared for HVAC system configurations 6 and 10 due to supply from passenger heat pump
Heat pump type for cooling passenger compartment	P320	none / R-744 / non R-744 2-stage / non R-744 3-stage / non R-744 4-stage / non R-744 continuous	In the case of multiple heat pumps with different technologies for cooling the passenger compartment, the dominant technology shall be declared (e.g. in accordance with available power or preferred usage in operation).
Heat pump type for heating passenger compartment	P321	none / R-744 / non R-744 2-stage / non R-744 3-stage / non R-744 4-stage / non R-744 continuous	In the case of multiple heat pumps with different technologies for heating the passenger compartment, the dominant technology shall be declared (e.g. in accordance with available power or preferred usage in operation).
Auxiliary heater power	P322	value in [W]	Rated output as specified for the device; Enter "0" if no auxiliary heater is installed.
Double glazing	P323	true / false	
Adjustable coolant thermostat	P324	true / false	
Adjustable auxiliary heater	P325	true / false	
Engine waste gas heat exchanger	P326	true / false	
Separate air distribution ducts	P327	true / false	

Parameter	Parameter ID	Input to the simulation tool	Explanations
Water electric heater	P328	true / false	Input to be provided only for HEV and PEV
Air electric heater	P329	true / false	Input to be provided only for HEV and PEV
Other heating technology	P330	true / false	Input to be provided only for HEV and PEV

3.6 Transmission Power Take-Off (PTO)

For heavy lorries with PTO and/or PTO drive mechanism installed on the transmission, the power consumption shall be considered by determined generic values. Those represent these power losses in usual drive mode when the consumer connected to a PTO, e.g. a hydraulic pump, is switched off/disengaged. Application related power consumptions at engaged consumer are added by the simulation tool and are not described in the following.

Table 12

Mechanical power demand of PTOs with switched off consumers for heavy lorries

Design variants regarding power losses (in comparison to a transmission without PTO and / or PTO drive mechanism)		Power loss
Additional drag loss relevant parts		
Shafts / gear wheels (P247)	Other elements (P248)	[W]
only one engaged gearwheel positioned above the specified oil level (no additional gearmesh)	—	0
only the drive shaft of the PTO	tooth clutch (incl. synchroniser) or sliding gearwheel	50
only the drive shaft of the PTO	multi-disc clutch	350
only the drive shaft of the PTO	multi-disc clutch with dedicated pump for PTO clutch	3 000
drive shaft and/or up to 2 engaged gearwheels	tooth clutch (incl. synchroniser) or sliding gearwheel	150
drive shaft and/or up to 2 engaged gearwheels	multi-disc clutch	400

Design variants regarding power losses (in comparison to a transmission without PTO and / or PTO drive mechanism)		Power loss
Additional drag loss relevant parts		
Shafts / gear wheels (P247)	Other elements (P248)	[W]
drive shaft and/or up to 2 engaged gearwheels	multi-disc clutch with dedicated pump for PTO clutch	3 050
drive shaft and/or more than 2 engaged gearwheels	tooth clutch (incl. synchroniser) or sliding gearwheel	200
drive shaft and/or more than 2 engaged gearwheels	multi-disc clutch	450
drive shaft and/or more than 2 engaged gearwheels	multi-disc clutch with dedicated pump for PTO clutch	3 100
PTO which includes 1 or more additional gearmesh(es), without disconnect clutch	—	1 500

In the case of multiple PTOs mounted to the transmission, only the component with the highest losses in accordance with Table 12, for its combination of criteria "PTOShaftsGearWheels" and "PTOShaftsOtherElements", shall be declared. For medium lorries and heavy buses, no declaration of transmission PTOs is foreseen.

(*) Regulation No 107 of the Economic Commission for Europe of the United Nations (UNECE) – Uniform provisions concerning the approval of category M2 or M3 vehicles with regard to their general construction (OJ L 52, 23.2.2018, p. 1).

(**) Regulation No 48 of the Economic Commission for Europe of the United Nations (UNECE) – Uniform provisions concerning the approval of vehicles with regard to the installation of lighting and light-signalling devices (OJ L 14, 16.1.2019, p. 42).

(***) Regulation No 122 of the Economic Commission for Europe of the United Nations (UN/ECE) – Uniform technical prescriptions concerning the approval of vehicles of categories M, N and O with regard to their heating systems (OJ L 19, 24.1.2020, p. 42).'.

ANNEX X

Annex X is amended as follows:

(1) in point 2, the heading is replaced by the following:

'Definitions

For the purposes of this Annex, in addition to the definitions contained in UN Regulation No. 54 (*) and in UN Regulation No. 117 (**), the following definitions shall apply:

(*) Regulation No 54 of the Economic Commission for Europe of the United Nations (UNECE) — Uniform provisions concerning the approval of pneumatic tyres for commercial vehicles and their trailers (OJ L 183, 11.7.2008, p. 41).
(**) Regulation No 117 of the Economic Commission for Europe of the United Nations (UNECE) — Uniform provisions concerning the approval of tyres with regard to rolling sound emissions and/or to adhesion on wet surfaces and/or to rolling resistance [2016/1350] (OJ L 218, 12.8.2016, p. 1).';

(2) in point 2(3)(b), a semi-colon is added to the end of the sentence;

(3) in point 2(3), point (c) is replaced by the following:

'(c) Tyre class (in accordance with UN Regulation No. 117);';

(4) in point 2(3)(f), the text 'UN/ECE' is replaced by 'UN';

(5) in point 2, the following point is inserted:

'(4) "FuelEfficiencyClass" is a parameter corresponding to the fuel efficiency class of the tyre as defined in Regulation (EU) 2020/740 (*) Annex I, part A. For tyres which are not in the scope of Regulation (EU) 2020/740, the fuel efficiency class of the tyre is not applicable and parameter FuelEfficiencyClass shall be recorded in Appendix 3 as "N/A".

(*) Regulation (EU) 2020/740 of the European Parliament and of the Council of 25 May 2020 on the labelling of tyres with respect to fuel efficiency and other parameters, amending Regulation (EU) 2017/1369 and repealing Regulation (EC) No 1222/2009 (OJ L 177, 5.6.2020, p. 1).';

(6) in point 3.1, the text 'ISO/TS' is replaced by 'IATF';

(7) point 3.2 is replaced by the following:

'3.2 Tyre rolling resistance coefficient measurement

The tyre rolling resistance coefficient shall be measured and aligned in accordance with Regulation (EU) 2020/740 Annex I, part A, expressed in N/kN and rounded to the first decimal place, in accordance with ISO 80000-1 Appendix B, section B.3, rule B (example 1).

The standard rolling resistance coefficient value for C2 and C3 tyres shall be the one corresponding to snow tyres for use in severe snow conditions as set out in UN Regulation No. 117 paragraph 6.3.2. For tyres not in the scope of Regulation (EC) No 661/2009 (*) or Regulation (EU) 2019/2144 (**), the standard value shall be 13,0 N/kN and the FuelEfficiencyClass shall be stated as "N/A".

The standard FzISO value shall be the one obtained as a percentage of the vertical force related to tyre load index at nominal tyre pressure (and single tyre application). For C2 and C3 tyres this percentage shall be 85 %, for other tyres the percentage shall be 80 %.

(*) Regulation (EC) No 661/2009 of the European Parliament and of the Council of 13 July 2009 concerning type-approval requirements for the general safety of motor vehicles, their trailers and systems, components and separate technical units intended therefor (OJ L 200, 31.7.2009, p. 1).

(**) Regulation (EU) 2019/2144 of the European Parliament and of the Council of 27 November 2019 on type-approval requirements for motor vehicles and their trailers, and systems, components and separate technical units intended for such vehicles, as regards their general safety and the protection of vehicle occupants and vulnerable road users, amending Regulation (EU) 2018/858 of the European Parliament and of the Council (OJ L 325, 16.12.2019, p. 1)';

(8) point 3.3 is replaced by the following:

'3.3. Measurement provisions

The tyre manufacturer shall test either in a laboratory of technical services as defined in Article 68 of Regulation (EU) 2018/858 the test referred to in point 3.2, or in its own facilities in the case that:

(i) a representative of a technical service designated by the responsible approval authority supervises the test; or

(ii) the tyre manufacturer is designated as a technical service of Category A in accordance with Article 68 of Regulation (EU) 2018/858.';

(9) point 3.4.1 is replaced by the following:

'3.4.1. The tyre shall be clearly identifiable in respect to the applicable certificate and the corresponding rolling resistance coefficient.';

(10) point 3.4.4 is replaced by the following:

'In line with Article 38(2) of Regulation (EU) 2018/858, no type-approval mark is required for tyres certified in accordance with this Regulation.';

(11) in point 4.2, the following sentence is inserted at the end:

'The tests have to be performed on new test tyres in the sense of the definition set out in paragraph 2 of UN Regulation No. 117.';

(12) in point 4.4.1, the last sentence is deleted.

(13) point 4.4.2 is replaced by the following:

'4.4.2. In the case that the measured and aligned value is lower or equal to the declared value plus 0,3 N/kN, the tyre rolling resistance value is considered compliant.';

(14) point 4.4.3 is replaced by the following:

'4.4.3. Where the measured and aligned value exceeds the declared value by more than 0,3 N/kN, the alignment equation that was valid at the time of the certification testing may be applied upon request of the tyre manufacturer and in agreement with the authority that is supervising the verification.';

(15) in point 4.4.3, the following points are inserted:

'4.4.3.1 If the measured and realigned value is lower or equal to the declared value plus 0,3 N/kN, the tyre rolling resistance value is considered compliant.

4.4.3.2 If the measured value, aligned as per points 4.4.3 and 4.4.3.1, exceeds the declared value by more than 0,3 N/kN, three additional tyres shall be tested. If the measured value, aligned as per points 4.4.3 and 4.4.3.1, of at least one of the three tyres exceeds the declared value by more than 0,4 N/kN, Article 23 shall apply.';

(16) in Appendix 1, point 4(c) is replaced by the following:

'(c) Tyre class (in accordance with Regulation (EC) No 661/2009 or Regulation (EU) 2019/2144)';

(17) in Appendix 1, point 7.2 is replaced by the following:

'7.2 tyre test load in accordance with Regulation (EU) 2020/740, Annex I, part A

F_{ZTYRE}.....[N]';

(18) in Appendix 2, Section I, point 0.2 is replaced by the following:

'0.2 Brand name(s)/trademark(s);';

(19) in Appendix 2, in Section I, point 0.4 is replaced by the following:

'0.4 Trade description(s)/commercial name(s)';

(20) in Appendix 2, Section I, point 0.5 is replaced by the following:

'0.5 Tyre class (in accordance with UN Regulation No. 117)';

(21) in Appendix 2, Section I, point 0.11 is replaced by the following:

'0.11 -'

(22) in Appendix 2, Section I, the following points are inserted:

'0.16 Tyre Type Approval Marking (in accordance with UN Regulation No. 117), if applicable

0.17 Tyre Type Approval Marking (in accordance with UN Regulation No. 54 or 30 (*)

(*) Regulation No 30 of the Economic Commission for Europe of the United Nations (UN/ECE) — Uniform provisions concerning the approval of pneumatic tyres for motor vehicles and their trailers (OJ L 201, 30.7.2008, p. 70).';

(23) in Appendix 2, Section II, point 6.3 is replaced by the following:

'6.3. Reference test inflation pressure: kPa';

(24) in Appendix 2, Section II, point 8.1 is replaced by the following:

'8.1. Initial value (or average in the case there is more than one): N/kN';

(25) in Appendix 3, Table 1, ninth row, the text of the first column is replaced by the following: 'Tyre Size Designation';

(26) in Appendix 3, Table 1, the following two new rows are inserted:

‘TyreClass	P370	string	[-]	“C2”, “C3” or “N/A”
FuelEfficiencyClass	P371	string		“A”, “B”, “C”, “D”, “E” or “N/A” ’;

(27) in Appendix 4, point 1.1 is replaced by the following:

‘1.1 Certification number for tyres shall comprise the following:

eX*YYYY/YYYY*ZZZZ/ZZZZ*T*00000*00

section 1	section 2	section 3	Additional letter to section 3	section 4	section 5
Indication of country issuing the certificate	HDV CO_2 determination Regulation “2017/2400”	Latest amending Regulation (ZZZZ/ZZZZ)	T = Tyre	Base certification number 00000	Extension 00’

ANNEX XI

'ANNEX Xa

CONFORMITY OF SIMULATION TOOL OPERATION AND OF CO_2 EMISSIONS AND FUEL CONSUMPTION RELATED PROPERTIES OF COMPONENTS, SEPARATE TECHNICAL UNITS AND SYSTEMS: VERIFICATION TESTING PROCEDURE

1. Introduction

This Annex sets out the requirements for the verification testing procedure, which is the test procedure for verifying the CO_2 emissions of new medium and heavy lorries.

The verification testing procedure consists of an on-road test to verify the CO_2 emissions of new vehicles after production. It shall be carried out by the vehicle manufacturer and supervised by the approval authority that granted the licence to operate the simulation tool.

During the verification testing procedure the torque and speed at the driven wheels, the engine speed, the fuel consumption, the engaged gear of the vehicle and the other relevant parameters listed in point 6.1.6 shall be measured. The measured data shall be used as input to the simulation tool, which uses the vehicle-related input data and the input information from the determination of the CO_2 emissions and fuel consumption of the vehicle. For the verification testing procedure simulation, the instantaneously measured wheel torque and the rotational speed of the wheels as well as the engine speed shall be used as input. To pass the verification testing procedure the CO_2 emissions calculated from the measured fuel consumption shall be within the tolerances set out in point 7 compared to the CO_2 emissions from the verification testing procedure simulation. Figure 1 gives a schematic picture of the verification testing procedure method. The evaluation steps as performed by the simulation tool in the verification testing procedure simulation are described in Appendix 1 of this Annex.

As part of the verification testing procedure, the correctness of the vehicle input data set from the certification of CO_2 emissions and fuel consumption related properties of the components, separate technical units and systems shall also be reviewed to check the data and the data handling process. The correctness of the input data relating to components, separate technical units and systems relevant for air drag and for rolling resistance of the vehicle shall be verified in accordance with point 6.1.1.

Figure 1

Schematic picture of the verification testing procedure method

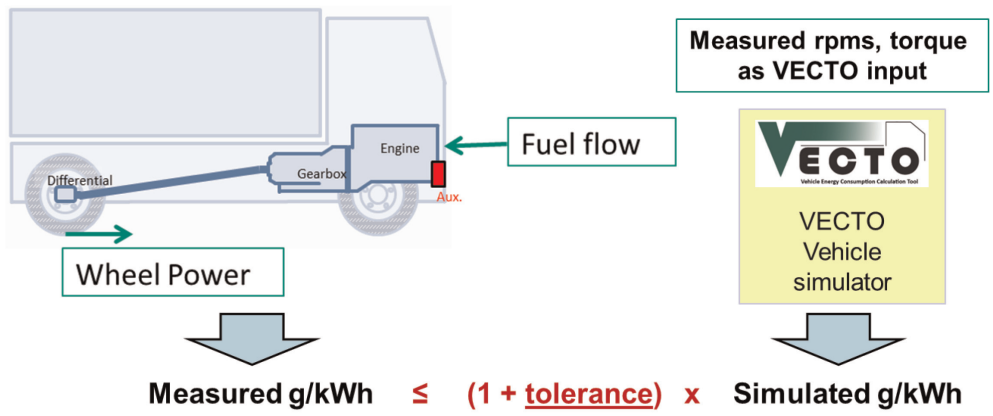

2. Definitions

For the purposes of this Annex the following definitions shall apply:

(1) "verification test relevant data set" means a set of input data for components, separate technical units and systems and input information used for CO_2 determination of a verification testing procedure relevant vehicle;

(2) "verification testing procedure relevant vehicle" means a new vehicle for which a value of CO_2 emissions and fuel consumption was determined and declared in accordance with Article 9;

(3) "corrected actual mass of the vehicle" means the "corrected actual mass of the vehicle" as defined in Annex III, point 2(4);

(4) "actual mass of the vehicle for VTP" is the actual mass of the vehicle as defined in Article 2(6) of Regulation (EU) No 1230/2012, but with a full-tank and plus the additional measurement equipment as set out in point 5 (measurement equipment), plus the actual mass of the trailer or semitrailer if demanded by 6.1.4.1;

(5) "actual mass of the vehicle for VTP with payload" means the actual mass of the vehicle for VTP with the payload applied in the verification testing procedure as set out in 6.1.4.2;

(6) "wheel power" means the total power at the driven wheels of a vehicle to overcome all driving resistances at the wheel, computed in the simulation tool from the measured torque and rotational speed of the driven wheels;

(7) "controller area network signal" or "CAN signal" means a signal from the connection with the vehicle electronic control unit as referred to in point 2.1.5 of Appendix 1 to Annex II to Regulation (EU) No 582/2011;

(8) "urban driving" means the total distance driven during the fuel consumption measurement at speeds not exceeding 50 km/h;

(9) "rural driving" means the total distance driven during the fuel consumption measurement at speeds exceeding 50 km/h, but not exceeding 70 km/h;

(10) "motorway driving" means the total distance driven in the fuel consumption measurement at speeds above 70 km/h;

(11) "crosstalk" means the signal at the main output of a sensor (M_y), produced by a measurand (F_z) acting on the sensor, which is different from the measurand assigned to this output; the coordinate system assignment is defined in accordance with ISO 4130.

3. Vehicle selection

The number of new vehicles to be tested per year of production ensures that the relevant variations of components, separate technical units or systems used are covered by the verification testing procedure. The vehicle selection for the verification test shall be based on the following requirements:

(a) The vehicles for the verification test shall be selected out of the vehicles from the production line for which a value of CO_2 emissions and fuel consumption has been determined and declared in accordance with Article 9. The components, separate technical units or systems mounted in or on the vehicle shall be out of series production and shall correspond to those mounted at production date of the vehicle.

(b) The vehicle selection shall be made by the approval authority that granted the licence to operate the simulation tool based on proposals from the vehicle manufacturer.

(c) Only vehicles with one driven axle shall be selected for verification test.

(d) It is recommended to include in each verification test relevant data sets of the components of interest and with the highest sales numbers per manufacturer. The components, separate technical units or systems may be verified all in one vehicle or in different vehicles. Apart from the criterion of highest sales numbers, the approval authority mentioned in (b) shall decide whether other vehicles with relevant data sets engine, axle and transmission shall be included in the verification test.

(e) Vehicles which use standard values for CO_2 certification of their components, separate technical units or systems instead of measured values for the transmission and for the axle losses shall not be selected for the verification test as long as vehicles complying with the requirements in points (a) to (c) and using measured loss maps for these components, separate technical units or systems in the CO_2 certification, are produced.

(f) The minimum number of different vehicles with different combinations of verification test relevant data sets to be tested by verification test per year shall be based on the sales numbers of the vehicle manufacturer as set out in Table 1.

Table 1

Determination of the minimum number of vehicles to be tested by the vehicle manufacturer

Number of vehicles to be tested	Schedule	Verification testing procedure relevant vehicles produced / year (**)
0	—	≤ 25
1	every 3 years (*)	26 – 250
1	every 2 years	251 – 5 000
1	every year	5 001 – 25 000
2	every year	25 001 – 50 000
3	every year	50 001 – 75 000
4	every year	75 001 – 100 000
5	every year	more than 100 000

(*) The total of all vehicles by a manufacturer falling within the scope of this regulation is to be considered and both medium lorries as well as heavy lorries need to be covered by the VTP over a six-year time span.
(**) The VTP shall be performed within the first two years.

(g) The vehicle manufacturer shall finalize the verification test within a period of 10 months after the date of selection of the vehicle for the verification test.

4. Vehicle conditions

Each vehicle for the verification test shall be in the condition resembling its intended placing on the market. No changes in hardware such as lubricants or in the software such as auxiliary controllers are allowed. The tyres may be replaced by measurement tyres of similar size (± 10 %).

The provisions as set out in points 3.3 to 3.6 of Annex II to Regulation (EU) 582/2011 shall apply.

4.1 Vehicle run in

Run in of the vehicle is not mandatory. If the total mileage of the test vehicle is less than 15 000 km, an evolution coefficient for the test result is applied by the simulation tool as defined in Appendix 1. The total mileage of the test vehicle shall be the odometer reading at start of the fuel consumption measurement. The maximum mileage at start of the warm-up shall be 20 000 km.

4.2 Fuel and lubricants

All lubricants shall be the same as the lubricants used when placing the vehicle on the market.

For the fuel consumption measurement as described in point 6.1.5 the fuel used shall be the one available on the market. In any case of dispute the fuel shall be the appropriate reference fuel specified in Annex IX to Regulation (EU) No 582/2011.

The fuel tank shall be full at start of the vehicle warm up. Refuelling of the vehicle between start of warm up and end of fuel consumption measurement is not allowed.

The net calorific value (NCV) of the fuel used in the verification test shall be determined in accordance with point 3.2 of Annex V. The fuel batch shall be taken from the tank after vehicle warm-up. In the case of dual-fuel engines, this procedure shall be applied to both fuels.

5. Measurement equipment

The calibration laboratory facilities shall comply with the requirements of either IATF 16949, ISO 9000 series or ISO/IEC 17025. All laboratory reference measurement equipment, used for calibration and verification, shall be traceable to national or international standards.

5.1 Wheel torque

The direct torque at all driven axles shall be measured with one of the following measurement systems fulfilling the requirements listed in Table 2:

(a) hub torque meter;

(b) rim torque meter;

(c) half-shaft torque meter.

The drift shall be measured during the verification test by zeroing the torque measurement system in accordance with point 6.1.5.4 after the vehicle warm up in accordance with point 6.1.5.3. by lifting the axle and measuring the torque at lifted axle directly after the verification test again in accordance with point 6.1.5.6.

For a valid test result a maximum drift (sum of absolute values of both wheels) of the torque measurement system over the verification testing procedure of 1,5 % of the calibrated range of a single torque meter shall be proven.

5.2 Vehicle speed

The recorded vehicle speed shall be based on the CAN signal.

5.3 Gear engaged

For vehicles with SMT and AMT transmissions the engaged gear is calculated by the simulation tool based on measured engine speed, the vehicle speed and the tyre dimensions and transmission ratios of the vehicle in accordance with Appendix 1. The engine speed is taken by the simulation tool from the input data as defined in point 5.4.

For vehicles with APT transmissions the engaged gear as well as the status of the torque converter (active or not active) shall be provided from CAN signals.

5.4 Rotational speed of the engine

The rotational speed of the engine shall be recorded from the CAN, OBD or alternative measurement systems that fulfil the requirements set out in Table 2.

5.5 Rotational speed of the wheels at the driven axle

The rotational speed of the left and right wheel of the driven axle shall be recorded from the CAN or alternative measurement systems that fulfil the requirements set out in Table 2.

5.6 Rotational speed of fan

For non-electrically driven engine cooling fans the rotational speed of the fan shall be recorded. For this purpose either the CAN signal or alternatively an external sensor fulfilling the requirements set out in Table 2 shall be used.

For electrically driven engine cooling fans the current and voltage shall be recorded for the direct current input at the terminal of the electric motor or the inverter. From these two signals, the electrical power at the terminal shall be calculated by multiplication and shall be available as a time-resolved signal as input to the simulation tool. In the case of multiple electrically driven engine cooling fans, the sum of electrical power at the terminals shall be made available.

5.7 Fuel measurement system

The fuel consumed shall be measured on-board with a measurement device based on one of the following measurement methods:

— Measurement of fuel mass. The fuel measuring device shall fulfil the accuracy requirements set out in Table 2 for the fuel mass measurement system.

— Measurement of fuel volume together with correction for the thermal expansion of the fuel. The fuel volume measurement device and fuel temperature measurement device shall fulfil the accuracy requirements set out in Table 2 for the fuel volume measurement system. Measured values of fuel volume flow shall be converted to fuel mass flow in accordance with the following equations:

$$m_{fuel,i} = V_{fuel,i} \cdot \rho_i$$

$$\rho_i = \frac{\rho_0}{1 + \beta(t_{i+1} - t_0)}$$

where:

$m_{fuel,\ i}$ = Fuel mass flow at sample i [g/h]

ρ_0 = Density of the fuel used for the verification test in (g/dm^3). The density shall be determined in accordance with Annex IX to the Regulation (EU) No 582/2011. If diesel fuel is used in the verification test, also the average value of the density interval for the reference fuels B7 in accordance with Annex IX to the Regulation (EU) No 582/2011 may be used.

t_0 = Fuel temperature that corresponds to density ρ_0 for the reference fuel [°C]

ρ_i = Density of the test fuel at sample i [g/dm^3]

$V_{fuel,\ i}$ = Fuel volume flow at sample i [dm^3/h]

t_i = Measured fuel temperature at sample i [°C]

β = Temperature correction factor (0,001 K^{-1}).

For dual-fuel vehicles the fuel flow shall be measured for each of the two fuels separately.

5.8 Vehicle mass

The following masses of the vehicle shall be measured with equipment fulfilling the requirements set out in Table 2:

(a) actual mass of the vehicle for VTP;

(b) actual mass of the vehicle for VTP with payload.

5.9 General requirements for the on-board measurements as specified under 5.1 to 5.8

The input data as set out in point 6.1.6. Table 4 shall be provided from the measurements. All data shall be recorded at least in 2 Hz frequency or at recommended frequency from the equipment maker, whichever is the higher value.

The input data for the simulation tool may be composed from different recorders. The torque and rotational speed at the wheels shall be recorded in one data-logging system. If different data-logging systems are used for the other signals, one common signal, such as vehicle speed, shall be recorded to ensure correct time alignment of the signals. The time alignment of the signals shall result in the highest correlation coefficient of the common signal recorded with the different data loggers.

The accuracy requirements set out in Table 2 shall be met by all measurement equipment used. Any equipment not listed in Table 2 shall fulfil the accuracy requirements set out in Table 2 of Annex V.

Table 2

Requirements of measurement systems

Measurement system	Accuracy	Rise time [1]
Balance for vehicle weight	50 kg or < 0,5 % of max. calibration whichever is smaller	—
Rotational speed wheels	< 0,5 % of reading at 80 km/h	≤ 1 s

Measurement system	Accuracy	Rise time (1)
Fuel mass flow for liquid fuels (2)	< 1,0 % of reading or < 0,2 % of max. calibration whichever is larger	—
Fuel mass flow for gaseous fuels (2)	< 1,0 % of reading or < 0,5 % of max. calibration whichever is larger	—
Fuel volume measurement system (2)	< 1,0 % of reading or < 0,5 % of max. calibration whichever is larger	—
Temperature of the fuel	± 1 °C	≤ 2 s
Sensor for measuring the rotational speed cooling fan	< 0,4 % of reading or < 0,2 % of max. calibration of speed whichever is larger	≤ 1 s
Voltage	< 2 % of reading or < 1 % of max. calibration of speed whichever is larger	≤ 1 s
Current	< 2 % of reading or < 1 % of max. calibration of speed whichever is larger	≤ 1 s
Engine speed	As set out in Annex V. In the case of vehicles with engine stop-start, it shall be verified that the engine speed is also recorded correctly for speeds below idle.	
Wheel torque	For 10 kNm calibration (over the entire calibration range): i. Non linearity (3): < ± 40 Nm for heavy lorries < ± 30 Nm for medium lorries ii. Repeatability (4): < ± 20 Nm for heavy lorries < ± 15 Nm for medium lorries iii. Crosstalk: < ± 20 Nm for heavy lorries < ± 15 Nm for medium lorries (only applicable for rim torque meters) iv. Measurement rate: ≥ 20 Hz	< 0,1 s

(1) Rise time means the difference in time between the 10 % and 90 % response of the final analyser reading (t90 – t10).
(2) The accuracy shall be met for the integral fuel flow over 100 minutes.
(3) Non linearity means the maximum deviation between ideal and actual output signal characteristics in relation to the measured value in a specific measuring range.
(4) Repeatability means closeness of the agreement between the results of successive measurements of the same measured value carried out under the same conditions of measurement.

The maximum calibration values shall be the maximum expected values during all test runs for the respective measurement system, multiplied by an arbitrary factor larger than 1 and less or equal than 2. For the torque measurement system the maximum calibration may be limited to 10 kNm.

In the case of dual-fuel engines, the maximum calibration value for the measurement system for fuel mass flow or fuel volume shall be determined following the requirements laid down in point 3.5 of Annex V. For fuel volume the maximum calibration value shall be determined by dividing the maximum calibration values for fuel mass flow by the density value ρ_0 defined in accordance with point 5.7.

Accuracy given shall be met by the sum of all single accuracies in the case more than one scale is used.

5.10. Engine torque

The engine torque shall be recorded during the verification testing procedure for the purpose of evaluating pollutant emissions. The signal shall fulfil the provisions as specified for the engine torque signal in Table 1 of point 2.2 of Appendix 1 to Annex II to Regulation (EU) 582/2011.

5.11. Pollutant emissions

For measurement of pollutant emissions the instrumentation and procedures as set out in Appendices 1 to 4 of Annex II to Regulation (EU) 582/2011 shall be used. The data evaluation shall provide instantaneous emission mass flows as set out in Table 4 of point 6.1.6. as input to the simulation tool.

Based on these input signals the simulation tool automatically calculates the brake specific pollutant emissions measured in the verification test (BSEM) as set out in Part B of Appendix 1 of this Annex. These results are then automatically written into the output of the simulation tool according to point 8.13.14. The additional requirements set out in Regulation (EU) 582/2011 on data evaluation (e.g. work based windows, moving average windows), test start and trip shall not apply.

In the verification test procedure, pass/fail criteria regarding pollutant emissions shall not apply.

6. Test procedure

6.1 Vehicle preparation

The vehicle shall be taken from the series production and selected as set out in point 3.

6.1.1 Verification of input information and input data and data handling

The manufacturer's records file and the customer information file for the vehicle selected shall be used as basis for verifying the input data. The vehicle identification number of the vehicle selected shall be the same as the vehicle identification number in the manufacturer's records file and the customer information file.

Upon request by the approval authority that granted the licence to operate the simulation tool, the vehicle manufacturer shall provide, within 15 working days, the manufacturer's records file, the input information and input data necessary to run the simulation tool as well as the certificate of CO_2 emissions and fuel consumption related properties for all relevant components, separate technical units or systems.

6.1.1.1 Verification of components, separate technical units or systems and input data and information

The following checks shall be performed for the components, separate technical units and systems mounted on the vehicle:

(a) Simulation tool data integrity: the integrity of the cryptographic hash of the manufacturer's records file in accordance with Article 9(3) re-calculated during the verification testing procedure with the hashing tool shall be verified by comparison with the cryptographic hash in the certificate of conformity;

(b) Vehicle data: the vehicle identification number, axle configuration, selected auxiliaries and power take off technology, disabled gears in accordance with point 6.2 of Annex III and requirements on active aero devices as set out in point 3.3.1.5 of Annex VIII shall match the selected vehicle;

(c) Engine torque limitations declared in the input to the simulation tool are subject to a verification in the VTP if they are declared for any of the highest 50 % of the gears (e.g. for any of the gears 7 to 12 of a 12-gear transmission) and if one of the following cases shall apply:

(i) Torque limit declared on the vehicle level in accordance with point 6.1 of Annex III

(ii) Torque limit declared in the input to the transmission component in accordance with parameter P157 in Table 2 of Appendix 12 of Annex VI and if the declared value does not exceed 90 % of the engine maximum torque

For any of the torque limits subject to a verification it shall be demonstrated that the 99 % percentile of the engine torque recorded during the fuel consumption measurement in the relevant gear does not exceed the declared torque limit by more than 5 %. For this purpose the verification test shall cover phases of full throttle in the respective gears. The verification shall be performed based on recorded engine torque as set out in 5.10.

The engine torque limitation verification may also be performed as a separate test only, consisting of dedicated full-load accelerations and with no other obligations on test evaluation.

(d) Component, separate technical unit or system data: the certification number and the model type imprinted on the certificate of CO_2 emissions and fuel consumption related properties shall match the component, separate technical unit or system installed in the selected vehicle;

(e) The hash of the simulation tool input data and the input information shall match the hash imprinted on the certificate of CO_2 emissions and fuel consumption related properties for the following components, separate technical units or systems:

(i) engines;

(ii) transmissions;

(iii) torque converters;

(iv) other torque transferring components;

(v) additional drivetrain components;

(vi) axles;

(vii) body or trailer air drag;

(viii) tyres.

6.1.1.2 Verification of the vehicle mass

If requested by the approval authority that granted the licence to operate the simulation tool, the determination of masses by the manufacturer shall be verified in accordance with point 2 of Appendix 2 of Annex I to Regulation (EU) No 1230/2012. Where that verification fails, the corrected actual mass as defined in point 2(4) of Annex III to this Regulation shall be determined.

6.1.1.3 Actions to be taken

In the case of discrepancies in the certification number or the cryptographic hash of one or more files regarding the components, separate technical units or systems listed in subpoints (1) to (8) of point 6.1.1.1 (e) the correct input data file fulfilling the checks in accordance with points 6.1.1.1 and 6.1.1.2 shall replace the incorrect data for all further actions. The same applies to any other incorrect information identified in subpoints (b) and (c) of point 6.1.1.1.

If the verification of results in the manufacturer's records file and the customer information file fails or no complete input data set with correct certificates of CO_2 emissions and fuel consumption related properties is available for the components, separate technical units or systems listed in subpoints (1) to (8) of point 6.1.1.1 (e) the verification test shall end and the vehicle fails the verification testing procedure.

6.1.2 Run in phase

A run in phase up to maximum 15 000 km odometer reading may take place. In the case of damage of any of the components, separate technical units or systems listed in point 6.1.1.1, the component, separate technical units or systems may be replaced by an equivalent component, separate technical units or systems with the same certification number. The replacement shall be documented in the test report.

All relevant components, separate technical units or systems shall be checked before the measurements to exclude unusual conditions, such as incorrect oil fill levels, plugged air filters or on-board diagnostic warnings.

6.1.3 Set up of measurement equipment

All measurement systems shall be calibrated in accordance with the provisions of the equipment maker. If no provisions exist, the recommendations from the equipment maker shall be followed for calibration.

After the run in phase, the vehicle shall be equipped with the measurement systems set out in point 5.

6.1.4 Set up of the test vehicle for the fuel consumption measurement

6.1.4.1 Vehicle configuration

Tractors of the vehicle groups defined in Table 1 and 2 of Annex I shall be tested with any type of semitrailer, providing the payload defined below can be applied.

Rigid lorries of the vehicle groups defined in Table 1 and 2 of Annex I shall be tested with trailer, if a trailer connection is mounted. Any body type or other device to carry the payload set out in point 6.1.4.2 can be applied. The bodies of rigid lorries may differ from the standard bodies set out in Appendix 4, point 2, of Annex VIII.

Vans of the vehicle groups defined in Table 2 of Annex I shall be tested with the final bodies of the complete or completed vehicle.

6.1.4.2 Vehicle payload

For heavy lorries of groups 4 and higher numbers the vehicle payload shall be set at minimum to a mass leading to a total test weight of 90 % of the maximum authorised weight in accordance with 96/53/EC (*) for the specific vehicle or vehicle combination.

For heavy lorries of groups 1s, 1, 2 and 3, and medium lorries the payload shall be in the range of 55 % to 75 % of the maximum authorised weight in accordance with 96/53/EC for the specific vehicle or vehicle combination.

6.1.4.3 Tyre inflation pressure

The tyre inflation pressure shall be set to the recommendation of the manufacturer with a maximum deviation of less than 10 %. The tyres of the semitrailer may differ from the standard tyres set out in Table 2 of Part B of Annex II to Regulation (EC) No 661/2009 for the CO_2 certification of tyres.

6.1.4.4 Settings for auxiliaries

All settings influencing the auxiliary energy demand shall be set to minimum reasonable energy consumption where applicable. The air conditioning shall be switched off and venting of the cabin shall be set lower than medium mass flow. Additional energy consumers not necessary to run the vehicle shall be switched off. External devices to provide energy on board, such as external batteries, are allowed only for running the extra measurement equipment for the verification testing procedure listed in Table 2, but shall not provide energy to vehicle equipment that will be present when placing the vehicle on the market.

6.1.4.5 Particle filter regeneration

A particle filter regeneration shall, if applicable, be initiated before the verification test. Regulation (EU) 582/2011, Annex II, point 4.6.10 shall apply.

6.1.5 Verification test

6.1.5.1 Route selection

The route selected for the verification test shall fulfil the requirements set out in Table 3. The routes may include both public and private tracks.

6.1.5.2 Vehicle pre conditioning

No other pre-conditioning is allowed than the pre-condition in accordance with point 6.1.5.3.

6.1.5.3 Vehicle warm up

Before the fuel consumption measurement starts, the vehicle shall be driven for warm up as set out in Table 3. The warm up phase shall not be considered in the evaluation of the verification test.

Before warm up is started, the PEMS analysers shall be checked and calibrated in accordance with the procedures as set out in Appendix 1 of Annex II to Regulation (EU) 582/2011.

6.1.5.4 Zeroing of the torque measurement equipment

The zeroing of the torque meters shall be performed as follows:

— Bring the vehicle to a standstill;

— Lift the instrumented wheels off the ground, in such a way that the wheels are able to rotate freely and no external torque is applied to the torque sensor;

— Perform the zeroing of the amplifier reading of the torque meters. Zeroing shall be finished within less than 20 minutes.

6.1.5.5 Fuel consumption measurement and recording of pollutant emission signals

The fuel consumption measurement shall start directly after the zeroing of the wheel-torque measurement equipment at vehicle stand still. The vehicle shall be driven during the measurement in a driving style avoiding unnecessary braking of the vehicle, gas pedal pumping and aggressive cornering. The setting for the advanced driver assistance systems which is activated automatically at key-on shall be used, and gear shifts shall be performed by the automated system (in the case of AMT or APT transmissions) and the cruise control shall be used (if applicable). The duration of the fuel consumption measurement shall be within the tolerances set out in Table 3. The fuel consumption measurement shall end also at vehicle stand still directly before the measurement of the drift of the torque measurement equipment.

The recording of signals relevant for the evaluation of pollutant emissions shall start latest once the fuel consumption measurement has started and end together with the fuel consumption measurement.

As input to the simulation tool the entire test sequence, starting with the last 0,5 s time step of the standstill phase after the zeroing of torque meters and ending with the first 0,5 s time step of the final standstill phase, shall be provided.

6.1.5.6 Measurement of the drift of the torque measurement equipment

Directly after the fuel consumption measurement, the drift of the torque measurement equipment shall be recorded by measuring the torque at the same vehicle conditions as during the zeroing process. If the fuel consumption measurement does end before the stop for the drift measurement, the vehicle shall be stopped for the drift measurement within 5 minutes. The drift of each torque meter shall be calculated from the average of a minimum sequence of 10 seconds.

Directly thereafter, the verification of the emission measurements shall be performed in accordance with the procedures as set out in point 2.7 of Appendix 1 to Annex II to Regulation (EU) 582/2011.

6.1.5.7 Boundary conditions for the verification test

The boundary conditions to be met for a valid verification test are set in Tables 3 to 3b.

If the vehicle passes the verification test in accordance with point 7.3, the test shall be set valid even if the following conditions are not met:

— undercut of minimum values for parameter No 1, 2, 6 and 9;

— exceedance of maximum values for parameter No 3, 4, 5, 7, 8, 10 and 12;

— exceedance of maximum values for parameter No 7, if the total testing time which is not in standstill exceeds 80 minutes.

Table 3

Parameters for a valid verification test for all vehicle groups

No.	Parameter	Min.	Max.
1	Warm up [minutes]	60	
2	Average velocity at warm up [km/h]	70 (1)	100
3	Fuel consumption measurement duration [minutes]	80	120
8	Average ambient temperature	5°C	30 C
9	Road condition dry	100 %	
10	Road condition snow or ice		0 %
11	Sea level of the route [m]		800
12	Duration of continuous idling at stand still [minutes]		3

(1) Where the maximum vehicle speed is less than 80 km/h, the average velocity in the warm-up shall exceed maximum vehicle speed minus 10 km/h.

Table 3a

Parameters for a valid verification test for vehicle groups 4, 5, 9, 10

No.	Parameter	Min.	Max.
4	Distance based share urban driving	2 %	8 %
5	Distance based share rural driving	7 %	13 %
6	Distance based share motorway driving	79 %	—
7	Time share of idling at stand still		5 %

Table 3b

Parameters for a valid verification test for other heavy and medium lorries

No.	Parameter	Min.	Max.
4	Distance based share urban driving	10 %	50 %
5	Distance based share rural driving	15 %	25 %
6	Distance based share motorway driving	25 %	—
7	Time share of idling at stand still		10 %

In the event of extraordinary traffic conditions the verification test shall be repeated.

6.1.6 Data reporting

The data recorded during the verification testing procedure shall be reported to the approval authority that granted the licence to operate the simulation tool as follows:

The data recorded shall be reported in a constant 2 Hz signals as set out in Table 4. The data recorded at higher frequencies than 2 Hz shall be converted into 2 Hz by averaging the time intervals around the 2 Hz nodes. In the case of e.g. 10 Hz sampling, the first 2 Hz node is defined by the average from second 0,1 to 0,5, the second node is defined by the average from second 0,6 to 1,0. The time stamp for each node shall be the last time stamp per node, i.e. 0,5, 1,0, 1,5 etc.

Table 4

Data reporting format for measured data for the simulation tool in the verification test

Quantity	Unit	Heading input data	Comment
time node	[s]	<t>	
vehicle speed	[km/h]	<v>	
engine speed	[rpm]	<n_eng>	
engine cooling fan speed	[rpm]	<n_fan>	In the case of non-electrically driven engine cooling fans
engine cooling fan electrical power	[W]	<Pel_fan>	In the case of electrically driven engine cooling fans
torque left wheel	[Nm]	<tq_wh_left>	
torque right wheel	[Nm]	<tq_wh_right>	
wheel speed left	[rpm]	<n_wh_left>	
wheel speed right	[rpm]	<n_wh_right>	

Quantity	Unit	Heading input data	Comment
gear	[-]	<gear>	mandatory for APT transmissions
Torque converter active	[-]	<TC_active>	0 = not active (locked); 1 = active (unlocked); mandatory for AT transmissions, not relevant for other transmission types
fuel flow	[g/h]	<fc_*X*>	Fuel mass flow in accordance with point 5.7 ([1]). In the heading "*X*" shall be the fuel type in accordance with Table 2 of Appendix 7 of Annex V to this Regulation, e.g. "<fc_Diesel CI>". For dual-fuel engines a separate column for each fuel shall be provided.
Engine torque	[Nm]	<tq_eng>	Engine torque in accordance with point 5.10.
CH_4 mass flow	[g/s]	<CH4>	Only if this component needs to be measured in accordance with point 1 of Appendix 1 of Annex II to Regulation (EU) 582/2011
CO mass flow	[g/s]	<CO>	
NMHC mass flow	[g/s]	<NMHC>	Only if this component needs to be measured in accordance with point 1 of Appendix 1 of Annex II to Regulation (EU) 582/2011
NO_x mass flow	[g/s]	<NOx>	
THC mass flow	[g/s]	<THC>	Only if this component needs to be measured in accordance with point 1 of Appendix 1 of Annex II to Regulation (EU) 582/2011
PM number flow	[#/s]	<PN>	
CO_2 mass flow	[g/s]		

([1]) The correction of fuel flow to standard NCV is performed automatically by the simulation tool based on the input of net calorific value (NCV) of the fuel used in the verification test in accordance with Table 4a.

Additionally the data as set out in Table 4a shall be reported. This data shall be entered directly into the graphical user interface of the simulation tool when evaluating the verification test procedure.

Table 4a

Data reporting format for further information for the simulation tool in the verification test

Quantity	Unit	Comment
NCV measured	[MJ/kg]	Net calorific value (NCV) of the fuel used in the verification test determined in accordance with point 3.2 of Annex V. This input shall be provided for all fuel types, i.e. also for Diesel CI engines ([1]). In the case of dual-fuel engines, values for both fuels shall be provided.
Run-in distance	[km]	In accordance with point 6.1.2. Based on this input the simulation tool corrects the measured fuel consumption in accordance with Appendix 1.
Diameter fan	[mm]	Diameter of the engine cooling fan. This input is not relevant for electrically driven engine cooling fans.
Torque meter drift left wheel	[Nm]	Average torque meter readings in accordance with point 6.1.5.6.
Torque meter drift right wheel	[Nm]	

([1]) In the VTP test, the vehicle may be operated with market Diesel fuel. Contrary to the situation for reference Diesel fuel (B7), the variation of the NCV for market fuel is assessed to be greater than the measuring accuracy when determining the NCV.

7. Test evaluation

7.1. Input to the simulation tool

(1) The following inputs to the simulation tool shall be made available: Input data and input information;

(2) Manufacturer's records file;

(3) Customer information file;

(4) Processed measurement data in accordance with Table 4;

(5) Further information in accordance with Table 4a.

7.2. Evaluation steps as performed by the simulation tool

7.2.1. Verification of the data handling process

The simulation tool shall re-simulate the CO_2 emissions and fuel consumption based on the input information and input data defined in 7.1. and verify the corresponding results in the manufacturer's records file and the customer information file as provided by the manufacturer.

In the case of any deviations, the remedial measures referred to in Article 23 shall apply.

7.2.2. Determination of the C_{VTP} ratio

The test evaluation shall compare CO_2 emissions during the measurement with simulated CO_2 emissions. For this comparison the ratio of measured and simulated brake specific CO_2 emissions for the total verification test relevant trip (C_{VTP}) shall be calculated by the simulation tool in accordance with the following equation:

$$C_{VTP} = \frac{\sum_{i=1}^{n} BSFC_{m-c,i} \times CO2_i}{\sum_{i=1}^{n} BSFC_{sim,i} \times CO2_i}$$

Where:

C_{VTP} = ratio of CO_2 emissions measured and simulated in the verification testing procedure ("C_{VTP} ratio")

n = number of fuels (2 for dual-fuel engines, else 1)

CO_{2i} = generic CO_2 emission factor (grams CO_2 per gram fuel) for the specific fuel type as implemented in the simulation tool.

$BSFC_{m-c}$ = brake specific fuel consumption measured and corrected for a run-in phase as calculated in accordance with point 2 of part A in Appendix 1 [g/kWh]

$BSFC_{sim}$ = brake specific fuel consumption determined by the simulation tool in accordance with point 3 of part A in Appendix 1 [g/kWh]

7.3. Pass/Fail check

The vehicle shall pass the verification test if the C_{VTP} ratio determined in accordance with 7.2.2. is equal or smaller than the tolerance set out in Table 5.

For a comparison with the declared CO_2 emissions of the vehicle in accordance with Article 9, the verified CO_2 emissions of the vehicle are determined as follows:

$$CO2_{verified} = C_{VTP} \times CO2_{declared}$$

where:

$CO_{2verified}$ = verified CO_2 emissions of the vehicle in [g/t-km]

$CO_{2declared}$ = declared CO_2 emissions of the vehicle in [g/t-km]

If a first vehicle fails the tolerances for C_{VTP}, two more tests may be performed on the same vehicle or two more similar vehicles may be tested on request of the vehicle manufacturer. For the evaluation of the pass criterion set out in Table 5, the averages of the individual C_{VTP} ratios from the up to three tests shall be used. If the pass criterion is not reached, the vehicle fails the verification testing procedure.

Table 5

Pass fail criterion for the verification test

Pass criterion for the verification testing procedure	C_{VTP} ratio ≤ 1,075

Where C_{VTP} is lower than 0,925, the results need to be reported to the Commission for further analysis to determine the cause.

8 Reporting procedures

The test report shall be established by the vehicle manufacturer for each vehicle tested and shall include at least the following results of the verification test:

8.1. General

8.1.1. Name and address of the vehicle manufacturer

8.1.2. Address(es) of assembly plant(s)

8.1.3. The name, address, telephone and fax numbers and e-mail address of the vehicle manufacturer's representative

8.1.4. Type and commercial description

8.1.5. Selection criteria for vehicle and CO_2 relevant components (text)

8.1.6. Vehicle owner

8.1.7. Odometer reading at test start of the fuel consumption measurement (km)

8.2. Vehicle information

8.2.1. Vehicle model / Commercial Name

8.2.2. Vehicle identification number (VIN)

8.2.2.1. Where the test has been performed following a situation in which the first vehicle test ends in failing the tolerances referred to in point 7.3, the vehicle identification number (VIN) of the vehicle tested first

8.2.3. Vehicle category (N_2, N_3)

8.2.4. Axle configuration

8.2.5. Technically permissible maximum laden mass (t)

8.2.6. Vehicle group

8.2.7. Corrected actual mass of the vehicle (kg)

8.2.8. Cryptographic hash of the manufacturer's records file

8.2.9. Vehicle combination's gross combined weight in the verification test (kg)

8.2.10. Mass in running order

8.3. Main engine specifications

8.3.1. Engine model

8.3.2. Engine certification number

8.3.3. Engine rated power (kW)

8.3.4. Engine capacity (l)

8.3.5. Engine reference fuel type (diesel/LPG/CNG…)

8.3.6. Hash of the fuel map file/document

8.4. Main transmission specifications

8.4.1. Transmission model

8.4.2. Transmission certification number

8.4.3. Main option used for generation of loss maps (Option1/Option2/Option3/Standard values)

8.4.4. Transmission type

8.4.5. Number of gears

8.4.6. Transmission ratio final gear

8.4.7. Retarder type

8.4.8. Power take off (yes/no)

8.4.9. Hash of the efficiency map file/document

8.5. Main retarder specifications

8.5.1. Retarder model

8.5.2. Retarder certification number

8.5.3. Certification option used for generation of a loss map (standard values/measurement)

8.5.4. Hash of the retarder efficiency map file/document

8.6. Torque converter specification

8.6.1. Torque converter model

8.6.2. Torque converter certification number

8.6.3. Certification option used for generation of a loss map (standard values/measurement)

8.6.4. Hash of the efficiency map file/document

8.7. Angle drive specifications

8.7.1. Angle drive model

8.7.2. Axle certification number

8.7.3. Certification option used for generation of a loss map (standard values/measurement)

8.7.4. Angle drive ratio

8.7.5. Hash of the efficiency map file/document

8.8. Axle specifications

8.8.1. Axle model

8.8.2. Axle certification number

8.8.3. Certification option used for generation of a loss map (standard values/measurement)

8.8.4. Axle type (e.g. standard single driven axle)

8.8.5. Axle ratio

8.8.6. Hash of the efficiency map file/document

8.9. Aerodynamics

8.9.1. Model

8.9.2. Certification option used for generation of CdxA (standard values /measurement)

8.9.3. CdxA Certification number (if applicable)

8.9.4. CdxA value

8.9.5. Hash of the efficiency map file/document

8.10. Main tyre specifications

8.10.1. Tyre certification number on all axles

8.10.2. Specific rolling resistance coefficient of all tyres on all axles

8.11. Main auxiliary specifications

8.11.1. Engine cooling fan technology

8.11.1.1 Engine cooling fan diameter

8.11.2. Steering pump technology

8.11.3. Electric system technology

8.11.4. Pneumatic system technology

8.12. Test conditions

8.12.1. Actual mass of the vehicle for VTP (kg)

8.12.2. Actual mass of the vehicle for VTP with payload (kg)

8.12.3. Warm up time (minutes)

8.12.4. Average velocity at warm up (km/h)

8.12.5. Fuel consumption measurement duration (minutes)

8.12.6. Distance based share urban driving (%)

8.12.7. Distance based share rural driving (%)

8.12.8. Distance based share motorway driving (%)

8.12.9. Time share of idling at stand still (%)

8.12.10. Average ambient temperature (°C)

8.12.11. Road condition (dry, wet, snow, ice, others please specify)

8.12.12. Maximum sea level of the route (m)

8.12.13. Maximum duration of continuous idling at stand still (minutes)

8.13. Results of the verification test

8.13.1. Average fan power calculated for the verification test by the simulation tool (kW)

8.13.2. Positive wheel work over the verification test calculated by the simulation tool (kWh)

8.13.3. Positive wheel work over the verification test measured (kWh)

8.13.4. NCV of the fuel(s) used in the verification test (MJ/kg)

8.13.5. Fuel consumption value(s) in the verification test measured (g/kWh)

8.13.5.1 CO_2 emission value(s) in the verification test measured (g/kWh)

8.13.6. Fuel consumption value(s) in the verification test measured, corrected (g/kWh)

8.13.6.1 CO_2 emission value(s) in the verification test measured, corrected (g/kWh)

8.13.7. Fuel consumption value(s) in the verification test simulated (g/kWh)

8.13.7.1 CO_2 emission value(s) in the verification test simulated (g/kWh)

8.13.8. Fuel consumption in the verification test simulated (g/kWh)

8.13.8.1 CO_2 emission in the verification test simulated (g/kWh)

8.13.9. Mission profile (long haul / long haul (EMS) / regional / regional (EMS) / urban / municipal / construction)

8.13.10. Verified CO_2 emissions of the vehicle (g/tkm)

8.13.11. Declared CO_2 emissions of the vehicle (g/tkm)

8.13.12. Ratio of fuel consumption measured and simulated in the verification testing procedure (C_{VPT}) in (-)

8.13.13. Passed the verification test (yes/no)

8.13.14. Pollutant emissions in the verification test

8.13.14.1. CO (mg/kWh)

8.13.14.2. THC (**) (mg/kWh)

8.13.14.3. NMHC (***) (mg/kWh)

8.13.14.4. CH_4 (***) (mg/kWh)

8.13.14.5. NO_x (mg/kWh)

8.13.14.6. PM number (#/kWh)

8.13.14.7. Positive engine work (kWh)

8.14. Software and user information

8.14.1. Simulation tool version (X.X.X)

8.14.2. Date and time of the simulation

8.15. Input to the simulation tool as set out in point 7.1.

8.16. Simulation output data

8.16.1. The aggregated simulation results

The comma separated values file of the same name as the job file and with an extension ".vsum" comprising the aggregated results of the simulated verification test that is generated by the simulation tool in its graphical user interface (GUI) version ("sum exec data file").

8.16.2. The time resolved simulation results

The comma separated values file with the name comprising the VIN and the measurement data file name and with an extension ".vmod" comprising the time resolved results of the simulated verification test that is generated by the simulation tool in its graphical user interface (GUI) version ("mod data file").

Appendix 1

Main evaluation steps and equations as performed by the simulation tool in a verification testing procedure simulation

This Appendix describes the main evaluation steps and underlying basic equations that are applied by the simulation tool in a verification testing procedure simulation.

PART A: Determination of the C_{VTP} factor

For the determination of the C_{VTP} factor as described in point 7.2.2, the calculation procedures as set out below are applied:

1. Calculation of wheel power

The torque data as read from the processed measurement data in accordance with Table 4 is corrected for the torque meter drift as follows:

$$T_{corr-i}(t) = T_i(t) - T_{drift-i} \cdot \frac{t - t_{start}}{t_{end} - t_{start}}$$

where:

i = index standing for left and right wheel of the driven axle

T_{corr} = drift corrected torque signal [Nm]

T = torque signal before drift correction [Nm]

T_{drift} = torque meter drift as recorded during drift check at the end of the verification test [Nm]

t = time node [s]

t_{start} = first time stamp in the processed measurement data in accordance with Table 4 [s]

t_{end} = last time stamp in the processed measurement data in accordance with Table 4 [s]

The wheel power is calculated from the corrected wheel torque and rotational wheel speed as follows:

$$P_{wheel-i(t)} = \frac{2 \cdot \pi \cdot n_{wheel-i(t)} \cdot T_{corr-i(t)}}{60000}$$

where:

i = index standing for left and right wheel of the driven axle

t = time node [s]

P_{wheel} = wheel power [kW]

n_{wheel} = rotational wheel speed [rpm]

T_{corr} = drift corrected torque signal [Nm]

The total wheel power is then calculated as the sum of the wheel power from left and right wheel:

$$P_{wheel(t)} = \sum_{i=1}^{2} P_{wheel-i(t)}$$

2. Determination of the measured brake specific fuel consumption ($FC_{m\text{-}c}$)

The result for "brake specific fuel consumption measured and corrected for a run-in phase" ($BSFC_{m\text{-}c}$) as applied for in 7.2.2 is calculated by the simulation tool as described below.

In a first step the raw value for measured brake specific fuel consumption for the verification test $BSFC_m$ is calculated as follows:

$$BSFC_m = \frac{\sum_{tstart}^{tend} FC_{m(t)} \cdot \Delta t}{W_{wheel,pos,m}}$$

where:

$BSFC_m$ = raw value for measured brake specific fuel consumption in the verification test [g/kWh]

$FC_{m\ (t)}$ = instantaneous fuel mass flow measured during the verification test [g/s]

Δt = time increment duration = 0,5 [s]

$W_{wheel,pos,m}$ = positive wheel work measured in the verification test [kWh]

$$W_{wheel,pos,m} = \sum_{t_{start}}^{t_{end}} \frac{\max\left(P_{wheel(t)}, 0\right) \cdot \Delta t}{3600}$$

In a second step $BSFC_m$ is corrected for the net calorific value (NCV) of the fuel used in the verification test resulting in $BSFC_{m,corr}$:

$$BSFC_{m,corr} = BSFC_m \cdot \frac{NCVmeas}{NCVstd}$$

where:

$BSFC_{m,corr}$ = value for measured brake specific fuel consumption in the verification test corrected and for NCV influence [g/kWh]

NCV_{meas} = NCV of the fuel used in the verification test determined in accordance with point 3.2 of Annex V [MJ/kg]

NCV_{std} = standard NCV in accordance with Table 5 in point 5.4.3.1 of Annex V [MJ/kg]

This correction is applied for all fuel types, i.e. also for Diesel CI engines (see footnote 2 in Table 4a).

In a third step the correction for a run-in phase is applied:

$$BSFC_{m-c} = BSFC_{m,corr} \cdot \min(1, \left(ef + mileage \cdot \frac{1 - ef}{15000}\right)) \text{ [g/kWh]}$$

where:

$BSFC_{m-c}$ = brake specific fuel consumption measured and corrected for a run-in phase

ef = evolution coefficient of 0,98

mileage = run-in distance [km]

For dual-fuel vehicles all three evaluation steps are performed separately for both fuels.

3. Determination of the brake specific fuel consumption simulated by the simulation tool ($BSFC_{sim}$)

In the verification test mode of the simulation tool the measured wheel power is applied as input to the backward simulation algorithm. The gears engaged during the verification test are determined by calculating the engine speeds per gear at the measured vehicle speed and selecting the gear that provides the engine speed closest to the measured engine speed. For APT transmissions during phases with active torque converter, the actual gear signal from the measurement is used.

The loss models for axle gear, angle drive, retarders, transmissions and PTOs are applied in a similar way as in the declaration mode of the simulation tool.

For power demand of auxiliary units concerning steering pump, pneumatic system, electric system and HVAC system the generic values as implemented per technology in the simulation tool are applied. For calculation of the power demand of the engine cooling fan the following formulas are applied:

Case a) non-electrically driven engine cooling fans:

$$P_{fan(t)} = C1 \cdot \left(\left(\frac{n_{fan(t)}}{C2}\right)^3 \cdot \left(\frac{D_{fan}}{C3}\right)^5\right)$$

where:

P_{fan} = power demand engine cooling fan [kW]

t = time node [s]

n_{fan} = measured rotational speed of the fan [rpm]

D_{fan} = diameter of the fan [mm]

C1 = 7,32 kW

C2 = 1 200 rpm

C3 = 810 mm

Case (b) electrically driven engine cooling fans:

$$P_{fan(t)} = P_{el(t)} \cdot 1{,}05$$

P_{fan} = power demand engine cooling fan [kW]

t = time node [s]

P_{el} = electrical power at the terminals of the engine cooling fan(s) as measured in accordance with point 5.6.1.

In the case of vehicles with engine stop-start events during the verification test, similar corrections for auxiliary power demand and energy to re-start the engine as applied in the declaration mode of the simulation tool are applied.

The simulation of the engines instantaneous fuel consumption $FC_{sim(t)}$ is performed for each 0,5 second time interval as follows:

— Interpolation from the engine fuel map using measured engine speed and resulting engine torque from the backward calculation including engines rotational inertia calculated from measured engine speed

— The engine torque demand as determined above is limited to the certified engine full-load capabilities. For those time intervals the wheel power in the backward simulation is reduced accordingly. In the calculation of $BSFC_{sim}$ as set out below this simulated wheel power trace ($P_{wheel,sim(t)}$) is taken into consideration.

— A WHTC correction factor is applied corresponding to the allocation of urban, rural and motorway based on the definitions as given in point 2(8) to 2(10) and the measured vehicle speed.

The brake specific fuel consumption calculated by the simulation tool $BSFC_{m\text{-}c}$ as applied in 7.2.2 for calculation of the C_{VTP} factor is calculated as follows:

$$BSFC_{sim} = \frac{\left(\sum_{tstart}^{tend} FC_{sim(t)} \cdot \Delta t\right) + FC_{ESS,corr}}{W_{wheel,pos,sim}}$$

where:

$BSFC_{sim}$ = brake specific fuel consumption determined by the simulation tool for the verification test [g/kWh]

t = time node [s]

FC_{sim} = engines instantaneous fuel consumption [g/s]

Δt = time increment duration = 0,5 [s]

$FC_{ESS,corr}$ = correction of fuel consumption regarding auxiliary power demand resulting from engine stop start (ESS) as applied in the declaration mode of the simulation tool [g]

$W_{wheel,pos,sim}$ = positive wheel work determined by the simulation tool for the verification test [kWh]

$$W_{wheel,pos,sim} = \sum_{t_{start}}^{t_{end}} \frac{\max\left(P_{wheel,sim(t)}, 0\right)}{3600 \cdot fs}$$

fs = Simulation rate = 2 [Hz]

$P_{wheel,sim}$ = Simulated wheel power for the verification test [kW]

In the case of dual-fuel engines, $BSFC_{sim\ is}$ determined for both fuels separately.

PART B: Determination of the brake specific pollutant emissions

The engine power is calculated from the measured signals for engine speed and engine torque as follows:

$$P_{eng,m(t)} = \frac{2 \cdot \pi \cdot n_{eng(t)} \cdot T_{eng,m(t)}}{60000}$$

where:

$P_{eng,m}$ = measured engine power in the verification test[kW]

t = time node [s]

n_{eng} = measured rotational engine speed [rpm]

T_{eng} = measured engine torque [Nm]

The positive engine work measured in the verification test is calculated as follows:

$$W_{eng,pos,m} = \sum_{t_{start}}^{t_{end}} \frac{\max\left(P_{eng,m(t)}, 0\right)}{3600 \cdot fs}$$

$W_{eng,pos,m}$ = positive engine work measured in the verification test [kWh]

fs = sampling rate = 2 [Hz]

t_{start} = first time stamp in the processed measurement data in accordance with Table 4 [s]

t_{end} = last time stamp in the processed measurement data in accordance with Table 4 [s]

The brake specific pollutant emissions measured in the verification test BSEM are calculated as follows:

$$\mathrm{BSEM} = \frac{\sum_{\mathrm{tstart}}^{\mathrm{tend}} EM(t)}{W_{eng,pos,m \cdot fs}}$$

where:

BSEM = brake specific pollutant emissions measured in the verification test [g/kWh]

EM = instantaneous pollutant emission mass flow measured during the verification test [g/s]

(*) Council Directive 96/53/EC of 25 July 1996 laying down for certain road vehicles circulating within the Community the maximum authorized dimensions in national and international traffic and the maximum authorized weights in international traffic (OJ L 235, 17.9.96, p. 59).

(**) Only if this component needs to be measured in accordance with point 1 of Appendix 1 to Annex II to Regulation (EU) 582/2011.

(***) For positive ignition engines.'.

ANNEX XII

'ANNEX Xb

CERTIFICATION OF ELECTRIC POWERTRAIN COMPONENTS

1. Introduction

The component test procedures described in this Annex shall produce input data relating to electric machine systems, IEPC, IHPC Type 1, battery systems and capacitor systems for the simulation tool.

2. Definitions and abbreviations

For the purposes of this Annex, the following definitions shall apply:

(1) "battery control unit" or "BCU" means an electronic device that controls, manages, detects or calculates electric and thermal functions of the battery system and that provides communication between the battery system or battery pack or part of a battery pack and other vehicle controllers.

(2) "battery pack" means a REESS (rechargeable electric energy storage system) that includes secondary cells or secondary cell assemblies, which are normally connected with cell electronics, power supply circuits and overcurrent shut-off device, including electrical interconnections and interfaces for external systems (examples of external systems are systems intended for thermal conditioning, high voltage and low voltage auxiliary and communication).

(3) "battery system" means a REESS that consists of secondary cell assemblies or battery pack(s) as well as electrical circuits, electronics, interfaces for external systems (e.g. thermal conditioning system), BCUs and contactors.

(4) "representative battery subsystem" means a subsystem of a battery system that consists of either secondary cell assemblies or battery pack(s) in serial and/or parallel configuration with electrical circuits, thermal conditioning system interfaces, control units and cell electronics.

(5) "cell" means a basic functional unit of a battery, consisting of an assembly of electrodes, electrolyte, container, terminals and usually separators, that is a source of electric energy obtained by direct conversion of chemical energy.

(6) "cell electronics" means an electronic device that collects and possibly monitors thermal or electric data of cells or cell assemblies or capacitors or capacitor assemblies and contains electronics for balancing between cells or capacitors, if necessary.

(7) "secondary cell" means a cell which is designed to be electrically recharged by way of a reversible chemical reaction.

(8) "capacitor" means a device for storage of electrical energy achieved by the effects of electrostatic double-layer capacitance and electrochemical pseudo capacitance in an electrochemical cell.

(9) "capacitor cell" means a basic functional unit of a capacitor, consisting of an assembly of electrodes, electrolyte, container, terminals and usually separators.

(10) "capacitor control unit" or "CCU" means an electronic device that controls, manages, detects or calculates electric and thermal functions of the capacitor system and that provides communication between the capacitor system or capacitor pack or part of a capacitor pack and other vehicle controllers.

(11) "capacitor pack" means a REESS that includes capacitor cells or capacitor assemblies normally connected with capacitor cell electronics, power supply circuits and overcurrent shut-off device, including electrical interconnections, interfaces for external systems and CCU. Examples of external systems are thermal conditioning, high voltage and low voltage auxiliary and communication.

(12) "capacitor system" means a REESS that includes capacitor cells or capacitor assemblies or capacitor pack(s) as well as electrical circuits, electronics, interfaces for external systems (e.g. thermal conditioning system), CCU and contactors.

(13) "representative capacitor subsystem" means a subsystem of a capacitor system that consists of either capacitor assemblies or capacitor pack(s) in serial and/or parallel configuration with electrical circuits, thermal conditioning system interfaces, control units and capacitor cell electronics.

(14) "nC" means the current rate equal to n times the one hour discharge capacity expressed in ampere (i.e. current that takes 1/n hours to fully charge or discharge the tested device based on the rated capacity).

(15) "continuously variable transmission" or "CVT" means an automatic transmission that can change seamlessly through a continuous range of gear ratios.

(16) "differential" means a device that splits a torque into two branches, e.g., for left- and right-hand side wheels, while allowing these branches to rotate at unequal speeds. The torque-splitting function can be biased or deactivated by a differential brake- or differential lock device (if applicable).

(17) "differential gear ratio" means the ratio of differential input speed (towards the primary propulsion energy converter) over differential output speed (towards driven wheels) with both differential output shafts running at the same speed.

(18) "drivetrain" means the connected elements of the powertrain for transmission of the mechanical energy between the propulsion energy converter(s) and the wheels.

(19) "electric machine" (EM) means an energy converter transforming between electrical and mechanical energy.

(20) "electric machine system" means a combination of electric powertrain components as installed in the vehicle comprising of an electric machine, inverter and electronic control unit(s), including connections and interfaces for external systems

(21) "electric machine type" is either (a) an asynchronous machine (ASM), (b) an excited synchronous machine (ESM), (c) a permanent magnet synchronous machine (PSM), or (d) a reluctance machine (RM).

(22) "ASM" means an asynchronous electric machine type in which the electric current in the rotor needed to produce torque is obtained by electromagnetic induction from the magnetic field of the stator winding.

(23) "ESM" means an excited synchronous electric machine type which contains multiphase AC electromagnets on the stator that create a magnetic field which rotates in time with the oscillations of the line current. It requires direct current supplied to the rotor for excitation.

(24) "PSM" means a permanent magnet sychronous electric machine type which contains multiphase AC electromagnets on the stator that create a magnetic field which rotates in time with the oscillations of the line current. Permanent magnets embedded in the steel rotor create a constant magnetic field.

(25) "RM" means a reluctance electric machine type which contains multiphase AC electromagnets on the stator that create a magnetic field which rotates in time with the oscillations of the line current. It induces non-permanent magnetic poles on the ferromagnetic rotor which does not have any windings. It generates torque through magnetic reluctance.

(26) "housing" means an integrated and structural part of the component, enclosing the internal units and providing protection against direct contact from any direction of access.

(27) "energy converter" means a system where the form of energy output is different from the form of energy input.

(28) "propulsion energy converter" means an energy converter of the powertrain which is not a peripheral device whose output energy is used directly or indirectly for the purpose of vehicle propulsion.

(29) "category of propulsion energy converter" means (i) an internal combustion engine, (ii) an electric machine, or (iii) a fuel cell.

(30) "energy storage system" means a system which stores energy and releases it in the same form as the input energy.

(31) "propulsion energy storage system" means an energy storage system of the powertrain which is not a peripheral device and whose output energy is used directly or indirectly for the purpose of vehicle propulsion.

(32) "category of propulsion energy storage system" means (i) a fuel storage system, (ii) a rechargeable electric energy storage system (REESS), or (iii) a rechargeable mechanical energy storage system.

(33) "form of energy" means (i) electrical energy, (ii) mechanical energy, or (iii) chemical energy (including fuels).

(34) "fuel storage system" means a propulsion energy storage system that stores chemical energy as liquid or gaseous fuel.

(35) "gearbox" means a device changing torque and speed with defined fixed ratios for each gear which may include the functionality of shiftable gears as well

(36) "gear number" means an identifier for the different shiftable gears for forward direction in a transmission with specific gear ratios; the shiftable gear with the highest gear ratio gets assigned the number 1; the identifying number is increased by the increment of 1 for each gear in descending order of gear ratios.

(37) "gear ratio" means the forward gear ratio of the speed of the input shaft (towards the primary propulsion energy converter) to the speed of the output shaft (towards driven wheels) without slip.

(38) "high-energy battery system" or "HEBS" means a battery system or representative battery subsystem, for which the numerical ratio between maximum discharge current in A, declared by the component manufacturer at a SOC of 50 % in accordance with point 5.4.2.3.2, and the nominal electric charge output in Ah at a 1C discharge rate at RT is lower than 10.

(39) "high-power battery system" or "HPBS" means a battery system or representative battery subsystem, for which the numerical ratio between maximum discharge current in A, declared by the component manufacturer at a SOC of 50 % in accordance with point 5.4.2.3.2, and the nominal electric charge output in Ah at a 1C discharge rate at RT is equal to or higher than 10.

(40) "integrated electric powertrain component" or "IEPC" means a combined system of an electric machine system together with the functionality of either a single- or multi-speed gearbox or a differential or both, characterised by at least one of the following features:

— shared housing of at least two components

— shared lubrication circuit of at least two components

— shared cooling circuit of at least two components

— shared electric connection of at least two components

Additionally, an IEPC shall comply with the following criteria:

— It shall have only output shaft(s) towards the driven wheels of the vehicle and shall have no input shaft(s) for feeding propulsion torque into the system.

— In the case of more than one electric machine system being part of the IEPC, all electric machines shall be connected to a single DC power source for all test runs performed in accordance with this Annex.

— In the case of the functionality of a multi-speed gearbox being included, there shall be only discrete gear steps.

(41) "IEPC design type wheel motor" means an IEPC with either one output shaft or two output shafts connected directly to the wheel hub(s) and where two configurations shall be distinguished for the purpose of this Annex:

— Configuration "L": In the case of one output shaft, the same component is installed twice in symmetrical application (i.e. one on the left and one on the right side of the vehicle at the same wheel position in longitudinal direction).

— Configuration "T": In the case of two output shafts, only a single component is installed with one output shaft connected to the left and the other output shaft connected to the right side of the vehicle at the same wheel position in longitudinal direction.

(42) "integrated hybrid electric vehicle powertrain component type 1" or "IHPC Type 1" means a combined system of multiple electric machine systems together with the functionality of a multi-speed gearbox characterised by a shared housing of all components and at least one of the following features:

— shared lubrication circuit of at least two components

— shared cooling circuit of at least two components

— shared electric connection of at least two components

Additionally, an IHPC Type 1 shall comply with the following criteria:

— It shall have only one input shaft for feeding propulsion torque into the system and only one output shaft towards the driven wheels of the vehicle.

— Only discrete gear steps shall be used for all test runs performed in accordance with this Annex.

— It shall enable operation of the powertrain as parallel hybrid (at least in one specific mode used for all test runs performed in accordance with this Annex).

— It shall be able to be tested in the transmission test in accordance with Annex VI with the electric power supply disconnected in accordance with subpoint (b) of point 4.4.1.2.

— All electric machines shall be connected to a single DC power source for all test runs performed in accordance with this Annex.

— The gearbox part within the IHPC Type 1 shall not be operated as CVT for all test runs performed in accordance with this Annex.

— A hydrodynamic torque converter shall not be part of the IHPC Type 1.

(43) "internal combustion engine" or "ICE" means an energy converter with intermittent or continuous oxidation of combustible fuel transforming between chemical and mechanical energy.

(44) "inverter" means an electric energy converter that changes direct electric current to single-phase or polyphase alternating electric currents

(45) "peripheral device" means any energy consuming, converting, storing or supplying devices, where the energy is not directly or indirectly used for the purpose of vehicle propulsion but which are essential to the operation of the powertrain and are therefore considered to be part of the powertrain.

(46) "powertrain" means the total combination in a vehicle of propulsion energy storage system(s), propulsion energy converter(s) and the drivetrain(s) providing the mechanical energy at the wheels for the purpose of vehicle propulsion, plus peripheral devices.

(47) "rated capacity" means the total number of ampere-hours that can be withdrawn from a fully charged battery determined in accordance with point 5.4.1.3

(48) "rated speed" means the highest rotational speed of the electric machine system where the overall maximum torque occurs

(49) "room temperature" or "RT" means that the ambient air inside the test cell shall have a temperature of (25 ± 10) °C

(50) "state of charge" or "SOC" means the available electrical charge stored in a battery system expressed as a percentage of its rated capacity in accordance with 5.4.1.3 (where 0 % represents empty and 100 % represents full)

(51) "unit under test" or "UUT" means the electric machine system, IEPC or IHPC Type 1 to be actually tested

(52) "battery UUT" means the battery system or representative battery subsystem to be actually tested

(53) "capacitor UUT" means the capacitor system or representative capacitor subsystem to be actually tested.

For the purposes of this Annex, the following abbreviations shall apply:

AC alternating current

DC direct current

DCIR direct current internal resistance

EMS electric machine system

OCV open circuit voltage

SC standard cycle

3. General requirements

The calibration laboratory facilities shall comply with the requirements of either IATF 16949, ISO 9000 series or ISO/IEC 17025. All laboratory reference measurement equipment, used for calibration and/or verification, shall be traceable to national or international standards.

3.1 Measurement equipment specifications

The measurement equipment shall meet the following accuracy requirements:

Table 1

Requirements of measurement systems

Measurement system	Accuracy [1]
Rotational speed	0,5 % of the analyser reading or 0,1 % of max. calibration [2] of rotational speed whichever is larger
Torque	0,6 % of the analyser reading or 0,3 % of max. calibration [2] or 0,5 Nm of torque whichever is larger
Current	0,5 % of the analyser reading or 0,25 % of max. calibration [2] or 0,5 A of current whichever is larger
Voltage	0,5 % of the analyser reading or 0,25 % of max. calibration [2] of voltage whichever is larger
Temperature	1,5 K

[1] "Accuracy" means the absolute value of deviation of the analyser reading from a reference value which is traceable to a national or international standard.
[2] The "maximum calibration" value shall be the maximum predicted value for the respective measurement system expected during a specific test run performed in accordance with this Annex multiplied by a factor of 1.1.

Multi-point calibration shall be allowed which means that a measurement system is allowed to be calibrated up to a nominal value which is less than the capacity of the measurement system.

3.2 Data recording

All measurement data, except temperature, shall be measured with and recorded at a frequency of not less than 100 Hz. For temperature a measurement frequency of not less than 10 Hz is sufficient.

Signal filtering may be applied in agreement with the approval authority. Any aliasing effect shall be avoided.

4. Testing of electric machine systems, IEPCs and IHPCs Type 1

4.1 Test conditions

The UUT shall be installed and the measurands current, voltage, electric inverter power, rotational speed and torque shall be defined in accordance with Figure 1 and point 4.1.1.

Figure 1

Provisions for measurement of electric machine system or IEPC

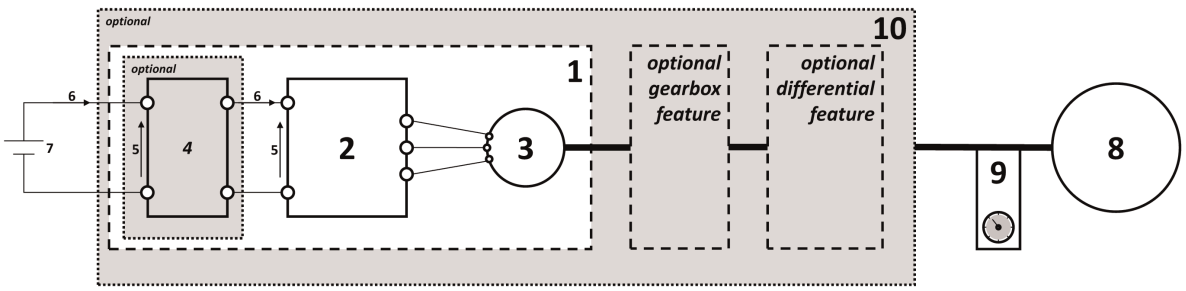

1 … Electric machine system
2 … Inverter
3 … Electric machine
4 … DC/DC converter (optional)
5 … Inverter input voltage
6 … Inverter input current
7 … Power supply to inverter
8 … Dynamometer (load machine)
9 ….. Speed/torque measurement
10 … IEPC *(optional instead of electric machine system)*

4.1.1 Equations for power figures

Power figures shall be calculated in accordance with the following equations:

4.1.1.1 Inverter power

The electric power to or from the inverter (or DC/DC converter if applicable) shall be calculated in accordance with the following equation:

$$P_{INV_in} = V_{INV_in} \times I_{INV_in}$$

where:

P_{INV_in} is the electric inverter power to or from the inverter (or DC/DC converter if applicable) on the DC side of the inverter (or on the side of the DC powersource of the DC/DC converter) [W]

V_{INV_in} is the voltage at the inverter (or DC/DC converter if applicable) input on the DC side of the inverter (or on the side of the DC powersource of the DC/DC converter) [V]

I_{INV_in} is the current at the inverter (or DC/DC converter if applicable) input on the DC side of the inverter (or on the side of the DC powersource of the DC/DC converter) [A]

In the case of multiple connections of inverter(s) (or DC/DC converter(s) if applicable) to the electric DC powersource as defined in accordance with point 4.1.3, the total sum of all different electric inverter powers shall be measured.

4.1.1.2 Mechanical output power

The mechanical output power of the UUT shall be calculated in accordance with the following equation:

$$P_{UUT_out} = \frac{2 \times \pi}{60} \times T_{UUT} \times n$$

where

P_{UUT_out} is the mechanical output power of the UUT [W]

T_{UUT} is the torque of the UUT [Nm]

n is the rotational speed of the UUT [min^{-1}]

For an electric machine system the torque and speed shall be measured at the rotational shaft. For an IEPC the torque and speed shall be measured at the output side of the gearbox or, if a differential is also included, at the output side(s) of the differential.

For an IEPC with integrated differential, the output torque measuring device(s) can either be installed on both output sides, or only one of the output sides. For test setups with only one dynamometer on the output side, the free rotating end of the IEPC with integrated differential shall be rotatably locked to the other end on the output side (e.g., by an activated differential lock or by means of any other mechanical differential lock implemented only for the measurement).

In the case of an IEPC design type wheel motor, either one single component or two such components may be measured. Where two such components are measured, the following provisions shall apply, depending on the configuration:

— For configuration "L" torque and speed shall be measured at the output side of the gearbox. In this case the input parameter "NrOfDesignTypeWheelMotorMeasured" shall be set to 1.

— For configuration "T", the output torque measuring device(s) can either be installed on both output shafts or only on one of the output shafts.

(a) Where the output torque measuring devices are installed on both output shafts, the following provisions shall apply:

— The torque values of both output shafts shall be summed up virtually in the test bench data processing or the data post-processing.

— The speed values of both output shafts shall be averaged virtually in the test bench data processing or post-processing.

— In this case the input parameter "NrOfDesignTypeWheelMotorMeasured" shall be set to 2.

(b) Where an output torque measuring device is installed only on one of the output shafts, the following provisions shall apply:

— Torque and speed are measured at the output side of the gearbox.

— In this case the input parameter "NrOfDesignTypeWheelMotorMeasured" shall be set to 1.

4.1.2 Run-in

On request of the applicant a run-in procedure may be applied to the UUT. The following provisions shall apply for a run-in procedure:

— The total run-time for the optional run-in and the measurement of an UUT (except wheel-ends) shall not exceed 120 hours.

— Only factory fill oil shall be used for the run-in procedure. The oil used for the run-in may also be used for the testing performed in accordance with point 4.2.

— The speed and torque profile for the run-in procedure shall be specified by the component manufacturer.

— The run-in procedure shall be documented by the component manufacturer with regard to run-time, speed, torque and oil temperature and reported to the approval authority.

— The requirements for the oil temperature (point 4.1.8.1), measurement accuracy (point 3.1) and test setup (points 4.1.3 to 4.1.7) shall not apply for the run-in procedure.

4.1.3 Power supply to inverter

The power supply to the inverter (or DC/DC converter if applicable) shall be a direct-current constant-voltage power supply, which is capable of supplying/absorbing adequate electric power to/from the inverter (or DC/DC converter if applicable) at the maximum (mechanical or electrical) power of the UUT for the duration of the test runs specified in this Annex.

The DC input voltage to the inverter (or DC/DC converter if applicable) shall be in a range of ±2 % of the requested target value of DC input voltage to the UUT during all periods where actual measurement data is recorded that is used as a basis for determining input data for the simulation tool.

Table 2 in paragraph 4.2 defines which test runs shall be performed at which voltage level(s). There are 2 different voltage levels defined for the measurements to be performed:

— $V_{min,Test}$ shall be the target value of the DC input voltage to the UUT corresponding to the minimum voltage for unlimited operating capability.

— $V_{max,Test}$ shall be the target value of the DC input voltage to the UUT corresponding to the maximum voltage for unlimited operating capability.

4.1.4 Setup and wiring

All wiring, shielding, brackets, etc. shall be in accordance with conditions specified by the manufacturer(s) of the different components of the UUT.

4.1.5 Cooling system

The temperature of all parts of the electric machine system shall be within the range allowed by the component manufacturer during the whole operating time of all test runs performed in accordance with this Annex. For IEPC and IHPC Type 1 this includes also all other components as gearboxes and axles being part of the IEPC or IHPC Type 1.

4.1.5.1 Cooling power during test runs

4.1.5.1.1 Cooling power for measurement of torque limitations

For all test runs performed in accordance with point 4.2, except for the EPMC in accordance with paragraph 4.2.6, the component manufacturer has to declare the number of used cooling circuits with connection to an external heat exchanger. For each of these circuits with connection to an external heat exchanger the following parameters at the inlet of the respective cooling circuit of the UUT shall be declared:

— the maximum coolant mass flow or maximum inlet pressure as specified by the component manufacturer

— the admitted maximum coolant temperatures as specified by the component manufacturer

— maximum available cooling power on the testbench

These declared values shall be documented in the information document for the respective component.

The following actual values shall remain below the declared maximum values and be recorded for each cooling circuit with connection to an external heat exchanger, together with the test data for all different test runs performed in accordance with point 4.2 except for the EPMC in accordance with point 4.2.6:

— coolant volume flow or mass flow

— coolant temperature at the inlet of the cooling circuit of the UUT

— coolant temperature at the inlet and outlet of the test bed heat exchanger on the side of the UUT

For all test runs performed in accordance with point 4.2, the minimum temperature of the coolant at the inlet of the cooling circuit of the UUT, in the case of liquid cooling shall be 25 °C.

Where fluids other than the regular cooling fluids are used for testing in accordance with this Annex, they must not exceed the temperature limits as defined by the component manufacturer.

In the case of liquid cooling, the maximum available cooling power on the testbench shall be determined based on the coolant massflow, the temperature difference over the test bed heat exchanger on the side of the UUT and the specific heat capacity of the coolant.

No additional fan with the purpose of actively cooling the components of the UUT shall be allowed in the test setup.

4.1.6 Inverter

The inverter shall be operated in the same mode and settings as specified for the actual in-vehicle using conditions by the component manufacturer.

4.1.7 Ambient conditions in test cell

All tests shall be performed at an ambient temperature in the testcell of 25 ± 10 °C. The ambient temperature shall be measured within a distance of 1 m to the UUT.

4.1.8 Lubricating oil for IEPCs or IHPC Type 1

Lubricating oil shall fulfill the provisions defined in points 4.1.8.1 to 4.1.8.4 below. These provisions shall not apply to EM systems.

4.1.8.1 Oil temperatures

The oil temperatures shall be measured at the centre of the oil sump or at any other suitable point in accordance with good engineering practice.

An auxiliary regulating system in accordance with paragraph 4.1.8.4 may be used, if necessary, to maintain the temperatures within the specified limits by the component manufacturer.

In the case of external oil conditioning which is added for testing purposes only, the oil temperature may be measured in the outlet line from the housing of the UUT to the conditioning system within 5 cm downstream of the outlet. In both cases the oil temperature shall not exceed the temperature limit as specified by the component manufacturer. Solid engineering rationale shall be provided to the type approval authority to explain that the external oil conditioning system is not used to improve the efficiency of the UUT. For oil circuits which are neither part of, nor connected to the cooling circuit of any components of the electric machine system, the temperature shall not exceed 70 °C.

4.1.8.2 Oil quality

Only recommended factory fill oils as specified by the component manufacturer of the UUT shall be used for the measurement.

4.1.8.3 Oil viscosity

If different oils are specified for the factory fill, the component manufacturer shall choose an oil for which the kinematic viscosity (KV) at the same temperature is within a range of ±10 % of the kinematic viscosity of the oil with the highest viscosity (within the specified tolerance band for KV100) for performing the measurements of the UUT related to certification.

4.1.8.4 Oil level and conditioning

The oil level or filling volume shall be within the maximum and minimum levels as defined in the component manufacturer's maintenance specifications.

An external oil conditioning and filtering system is permitted. The housing of the UUT may be modified for the inclusion of the oil conditioning system.

The oil conditioning system shall not be installed in a way which would enable changing oil levels of the UUT in order to raise efficiency or to generate propulsion torques in accordance with good engineering practice.

4.1.9 Sign conventions

4.1.9.1 Torque and power

Measured values of torque and power shall have a positive sign for the UUT driving the dyno and a negative sign for the UUT braking the dyno (i.e. dyno driving the UUT).

4.1.9.2 Current

Measured values of current shall have a positive sign for the UUT drawing electric power from the power supply to the inverter (or DC/DC converter if applicable) and a negative sign for the UUT delivering electric power to the inverter (or DC/DC converter if applicable) and to the power supply.

4.2 Test runs to be performed

Table 2 defines all test runs to be performed for the purpose of certification of one specific electric machine system family or IEPC family defined in accordance with Appendix 13.

The electric power mapping cycle (EPMC) in accordance with point 4.2.6 and the drag curve in accordance with point 4.2.3 shall be omitted for all other members within a family except the parent of the family.

Where, upon request of the component manufacturer, Article 15(5) of this Regulation is applied, the EPMC in accordance with point 4.2.6 and the drag curve in accordance with point 4.2.3 shall be performed additionally for that specific EM or IEPC.

Table 2

Overview of test runs to be performed for electric machine systems or IEPCs

Test run	Reference to point	Required voltage level(s) to be performed (in accordance with 4.1.3)	Required to be run for parent	Required to be run for other members within a family
Maximum and minimum torque limits	4.2.2	$V_{min,Test}$ and $V_{max,Test}$	yes	yes
Drag curve	4.2.3	Either $V_{min,Test}$ or $V_{max,Test}$	yes	no
Maximum 30 minutes continuous torque	4.2.4	$V_{min,Test}$ and $V_{max,Test}$	yes	yes
Overload characteristics	4.2.5	$V_{min,Test}$ and $V_{max,Test}$	yes	yes
EPMC	4.2.6	$V_{min,Test}$ and $V_{max,Test}$	yes	no

4.2.1 General provisions

The measurement shall be performed with all temperatures of the UUT during the test kept within the component manufacturer defined limit values.

All tests need to be performed with de-rating functionality depending on temperature limits of the electric machine system fully active. Where additional parameters of other systems located outside of the electric machine system's boundaries do influence the de-rating behaviour in in-vehicle applications, these additional parameters shall not be taken into account for all test runs performed in accordance with this Annex.

For an electric machine system all torque and speed values indicated shall refer to the rotational shaft of the electric machine unless stated otherwise.

For an IEPC all torque and speed values indicated shall refer to the output side of the gearbox or, if a differential is also included, to the output side of the differential unless stated otherwise.

4.2.2 Test of maximum and minimum torque limits

The test measures the maximum and minimum torque characteristics of the UUT in order to verify the declared limitations of the system.

For IEPC with multispeed gearbox the test shall be performed only for the gear with the gear ratio closest to 1. Where the gear ratios of two gears have the same distance to a gear ratio of 1, the test shall be performed only for the gear with the higher of the two gear ratios.

4.2.2.1 Declaration of values by the component manufacturer

The component manufacturer shall declare the values for the maximum and minimum torque of the UUT as a function of the rotational speed of the UUT between 0 rpm and the maximum operating speed of the UUT prior to the test. This declaration shall be separately made for each of the two voltage levels $V_{min,Test}$ and $V_{max,Test}$.

4.2.2.2 Verification of maximum torque limits

The UUT shall be conditioned (i.e. without operating the system) at an ambient temperature of 25 ± 10 °C for a minimum of two hours until the start of the test run. If this test is performed directly consecutive to any other test run performed in accordance with this Annex the conditioning for a minimum of two hours may be omitted or shortened as long as the UUT stays within the testcell with the ambient temperature in the testcell kept within 25 ± 10 °C.

Just before beginning the test, the UUT shall be run on the bench for three minutes delivering a power equal to 80 % of the maximum power at the speed recommended by the component manufacturer.

The output torque and rotational speed of the UUT shall be measured at at least 10 different rotational speeds to define correctly the maximum torque curve between lowest and the highest speed.

The lowest speed setpoint shall be specified by the component manufacturer at a speed equal or smaller than 2 % of the maximum operating speed of the UUT as declared by the component manufacturer in accordance with point 4.2.2.1. Where the test setup does not allow operating the system at such a low speed setpoint, the lowest speed setpoint shall be specified by the component manufacturer as the lowest speed which can be realised by the specific test setup.

The highest speed setpoint shall be defined by the maximum operating speed of the UUT as declared by the component manufacturer in accordance with point 4.2.2.1.

The remaining 8 or more different rotational speed setpoints shall be located between the lowest and highest speed setpoint and shall be specified by the component manufacturer. The interval between two adjacent speed setpoints shall not be larger than 15 % of the maximum operating speed of the UUT as declared by the component manufacturer.

All operating points shall be held for an operating time of at least 3 seconds. Output torque and rotational speed of the UUT shall be recorded as average value of the last second of the measurement. The whole test shall be completed within 5 minutes.

4.2.2.3 Verification of minimum torque limits

The UUT shall be conditioned (i.e. without operating the system) at an ambient temperature of 25 ±10 °C for a minimum of two hours until the start of the test run. If this test is performed directly consecutive to any other test run performed in accordance with this Annex the conditioning for a minimum of two hours may be omitted or shortened as long as the UUT stays within the testcell with the ambient temperature in the testcell kept within 25 ±10 °C.

Just before beginning the test, the UUT shall be run on the bench for three minutes delivering a power equal to 80 % of the maximum power at the speed recommended by the component manufacturer.

The output torque and rotational speed of the UUT shall be measured at the same rotational speeds as selected in point 4.2.2.2.

All operating points shall be held for an operating time of at least 3 seconds. Output torque and rotational speed of the UUT shall be recorded as average value of the last second of the measurement. The whole test shall be completed within 5 minutes.

4.2.2.4 Interpretation of results

The maximum torque of the UUT as declared by the component manufacturer in accordance with point 4.2.2.1 shall be accepted as final values if they are not higher than + 2 % for overall maximum torque and than +4 % at the other measurement points with a tolerance of ± 2 % for rotational speeds from the values measured in accordance with point 4.2.2.2.

Where the values for maximum torque declared by the component manufacturer exceed the limits defined above, the actual measured values shall be used as final values.

Where the values for maximum torque of the UUT as declared by the component manufacturer in accordance with point 4.2.2.1 are lower than the values measured in accordance with point 4.2.2.2, the values declared by the component manufacturer shall be used as final values.

The minimum torque of the UUT as declared by the component manufacturer in accordance with point 4.2.2.1 shall be accepted as final values if they are not lower than -2 % for overall minimum torque and than – 4% at the other measurement points with a tolerance of ±2 % for rotational speeds from the values measured in accordance with point 4.2.2.3.

Where the values for minimum torque declared by the component manufacturer exceed the limits defined above, the actual measured values shall be used as final values.

Where the values for minimum torque of the UUT as declared by the component manufacturer in accordance with point 4.2.2.1 are higher than the values measured in accordance with point 4.2.2.3, the values declared by the component manufacturer shall be used as final values.

4.2.3 Test of drag curve

The test measures the drag losses in the UUT, i.e. the mechanical and/or electrical power necessary to spin the system at a certain speed by external power sources.

The UUT shall be conditioned (i.e. without operating the system) at an ambient temperature of 25 ±10 °C for a minimum of two hours. If this test is performed directly consecutive to any other test run performed in accordance with this Annex the conditioning for a minimum of two hours may be omitted or shortened as long as the UUT stays within the testcell with the ambient temperature in the testcell kept within 25 ±10 °C.

Just before beginning of the actual test, the UUT may optionally be run on the bench for three minutes delivering a power equal to 80 % of the maximum power at the speed recommended by the component manufacturer.

The actual test shall be performed in accordance with one of the following options:

— Option A: The output shaft of the UUT shall be connected to a load machine (i.e. dynamometer) and the load machine (i.e. dynamometer) shall be driving the UUT at the target rotational speed. Either the electric power supply to the inverter (or DC/DC converter if applicable) or the AC phase cables between the electric machine and inverter may be set inactive or disconnected.

— Option B: The output shaft of the UUT shall not be connected to a load machine (i.e. dynamometer) and the UUT shall be operated at the target rotational speed by electric power supplied to the inverter (or DC/DC converter if applicable).

— Option C: The output shaft of the UUT shall be connected to a load machine (i.e. dynamometer) and the UUT shall be operated at the target rotational speed either by the load machine (i.e. dynamometer) or the electric power supplied to the inverter (or DC/DC converter if applicable) or a combination of both

The test shall be performed at least at the same rotational speeds as selected in point 4.2.2.2, more operating points at other rotational speeds may be added. All operating points shall be held for an operating time of at least 10 seconds, during which the actual rotational speed of the UUT shall be within ± 2 % of the setpoint for rotational speed.

The following values shall be recorded as average value over the last 5 seconds of the measurement, depending on the chosen testing option:

— For option B and C above: electric power to the inverter (or DC/DC converter if applicable)

— For option A and C above: the torque of the load machine (i.e. dynamometer) applied to the output shaft(s) of the UUT

— For all options: the rotational speed of the UUT

Where the UUT is an IEPC with multispeed gearbox, the test shall be performed for the gear with the gear ratio closest to 1. Where the gear ratios of two gears have the same distance to a gear ratio of 1, the test shall be performed only for the gear with the higher of the two gear ratios.

Additionally, the test may be performed also for all other forward gears of the IEPC so that a dedicated dataset for each forward gear of the IEPC is determined.

4.2.4 Test of maximum 30 minutes continuous torque

The test measures the maximum 30 minutes continuous torque which can be achieved by the UUT on average over a duration of 1 800 seconds.

For IEPC with multispeed gearbox the test shall be performed only for the gear with the gear ratio closest to 1. Where the gear ratios of two gears have the same distance to a gear ratio of 1, the test shall be performed only for the gear with the higher of the two gear ratios.

4.2.4.1 Declaration of values by the component manufacturer

The component manufacturer shall declare the values for the maximum 30 minutes continuous torque of the UUT as well as the corresponding rotational speed prior to the test. The rotational speed shall be in a range, in which the mechanical power is greater than 90 % of the overall maximum power determined from the maximum torque limit data recorded in accordance with point 4.2.2 for the respective voltage level. This declaration shall be separately made for each of the two voltage levels $V_{min,Test}$ and $V_{max,Test}$.

4.2.4.2 Verification of maximum 30 minutes continuous torque

The UUT shall be conditioned (i.e. without operating the system) at an ambient temperature of 25 ±10 °C for a minimum of four hours. If this test is performed directly consecutive to any other test run performed in accordance with this Annex the conditioning for a minimum of four hours may be omitted or shortened as long as the UUT stays within the testcell with the ambient temperature in the testcell kept within 25 ±10 °C.

The UUT shall be run at the torque and speed setpoint which corresponds to the maximum 30 minutes continuous torque declared by the component manufacturer in accordance with point 4.2.4.1 for a total period of 1 800 seconds.

The output torque and rotational speed of the UUT as well as the electric power to or from the inverter (or DC/DC converter if applicable) shall be measured over this period of 1 800 seconds. The mechanical power value measured over time shall be in a range of ±5 % of the mechanical power value declared by the component manufacturer in accordance with paragraph 4.2.4.1, the rotational speed shall be within ±2 % of the value declared by the component manufacturer in accordance with point 4.2.4.1. The maximum 30 minutes continuous torque is the average of the output torque within the 1 800-second measurement period. The corresponding rotational speed is the average of the rotational speed within the 1 800-second measurement period.

4.2.4.3 Interpretation of results

The values declared by the component manufacturer in accordance with point 4.2.4.1 shall be accepted as final values if they do not differ by more than +4 % for torque with a tolerance of ±2 % for rotational speed from the average values determined in accordance with point 4.2.4.2.

Where the values declared by the component manufacturer exceed the limits defined above, the requirements referred to in points 4.2.4.1 to 4.2.4.3 shall be repeated with different values for the maximum 30 minutes continuous torque and/or the corresponding rotational speed.

Where the value for torque declared by the component manufacturer in accordance with point 4.2.4.1 is lower than the average value for torque determined in accordance with point 4.2.4.2 with a tolerance of ±2 % for rotational speed, the values declared by the component manufacturer shall be used as final values.

Additionally, the average of the actual measured electric power to or from the inverter (or DC/DC converter if applicable) over the 1 800-second measurement period shall be calculated. Also the average 30 minutes continuous power shall be calculated from the final values of maximum 30 minutes continuous torque and the corresponding average rotational speed.

4.2.5 Test of overload characteristics

The test measures the duration of the capability of the UUT to provide the maximum output torque in order to derive the overload characteristics of the system.

For IEPC with multispeed gearbox the test shall be performed only for the gear with the gear ratio closest to 1. Where the gear ratios of two gears have the same distance to a gear ratio of 1, the test shall be performed only for the gear with the higher of the two gear ratios.

4.2.5.1 Declaration of values by the component manufacturer

The component manufacturer shall declare the value for the maximum output torque of the UUT at the specific rotational speed chosen for the test as well as the corresponding rotational speed prior to the test. The corresponding rotational speed shall be the same speed setpoint as used for the measurement performed in accordance with point 4.2.4.2 for the respective voltage level. The declared value for the maximum output torque of the UUT shall be equal or greater than the value of the maximum 30 minutes continuous torque determined in accordance with point 4.2.4.3 for the respective voltage level.

In addition the component manufacturer shall declare a duration t_{0_maxP} for which the maximum output torque of the UUT can be constantly achieved starting from the conditions as set out in point 4.2.5.2. This declaration shall be separately made for each of the two voltage levels $V_{min,Test}$ and $V_{max,Test}$.

4.2.5.2 Verification of maximum output torque

The UUT shall be conditioned (i.e. without operating the system) at an ambient temperature of 25 °C ± 10 °C for a minimum of two hours. If this test is performed directly consecutive to any other test run performed in accordance with this Annex the conditioning for a minimum of two hours may be omitted or shortened as long as the UUT stays within the testcell with the ambient temperature in the testcell kept within 25 ±10 °C.

Just before beginning the test, the UUT shall be run on the bench for 30 minutes delivering 50 % of the maximum 30 minutes continuous torque at the respective speed setpoint as determined in accordance with point 4.2.4.3.

Then the UUT shall be run at the torque and speed setpoint which corresponds to the maximum output torque declared by the component manufacturer in accordance with point 4.2.5.1.

The output torque and rotational speed of the UUT as well as the DC input voltage to the inverter (or DC/DC converter if applicable) and the electric power to or from the inverter (or DC/DC converter if applicable) shall be measured over a period of t_{0_maxP} declared by the component manufacturer in accordance with point 4.2.5.1.

4.2.5.3 Interpretation of results

The recorded values for torque and speed over time measured in accordance with point 4.2.5.2 shall be accepted if they do not differ by more than ±2 % for torque and ±2 % for rotational speed from the values declared by the component manufacturer in accordance with point 4.2.5.1 over the whole period of t_{0_maxP}.

Where the values declared by the component manufacturer are outside the tolerances defined in the first paragraph of this point, the procedures laid down in points 4.2.5.1, 4.2.5.2 and in this point shall be repeated with different values for the maximum output torque of the UUT and/or the duration t_{0_maxP}.

The average of the actual measured values over the period of t_{0_maxP} calculated for the different signals of rotational speed, torque and DC input voltage to the inverter (or DC/DC converter if applicable) shall be used as final values for characterisation of the overload point. Additionally, the average of the actual measured electric power to or from the inverter (or DC/DC converter if applicable) over the period of t_{0_maxP} shall be calculated.

4.2.6 EPMC test

The EPMC test measures the electric power to or from the inverter (or DC/DC converter if applicable) for different operating points of the UUT.

4.2.6.1 Preconditioning

The UUT shall be conditioned (i.e. without operating the system) at an ambient temperature of 25 ±10 °C for a minimum of two hours. If this test is performed directly consecutive to any other test run performed in accordance with this Annex the conditioning for a minimum of two hours may be omitted or shortened as long as the UUT stays within the testcell with the ambient temperature in the testcell kept within 25 ±10 °C.

4.2.6.2 Operating points to be measured

For IEPC with multispeed gearbox the setpoints for rotational speed in accordance with point 4.2.6.2.1 and for torque accordance with point 4.2.6.2.2 are determined for each single forward gear.

4.2.6.2.1 Setpoints for rotational speed

The setpoints for either a standalone electric machine system or an IEPC with no shiftable gears shall be defined in accordance with the following provisions:

(a) As setpoints for rotational speed of the UUT the same setpoints used for the measurement performed in accordance with point 4.2.2.2 for the respective voltage level shall be used.

(b) The speed setpoint for the maximum 30 minutes continuous torque verification performed in accordance with point 4.2.4.2 for the respective voltage level shall be used in addition to the setpoints defined in subpoint (a) above.

(c) Further speed setpoints may be defined in addition to the setpoints defined in subpoints (a) and (b) above.

In the case of an IEPC with multispeed gearbox, a separate dataset of setpoints for rotational speed of the UUT shall be defined for each single forward gear based on the following provisions:

(d) The rotational speed setpoints for the gear with the gear ratio closest to 1 (where the gear ratios of two gears have the same distance to a gear ratio of 1, the test shall be performed only for the gear with the higher of the two gear ratios) determined in accordance with subpoints (a) to (c), $n_{k,gear_iCT1}$, shall be used as basis for the further step in subpoint (e).

(e) These rotational speed setpoints shall be converted to the respective setpoints for all other gears by the following equation:

$$n_{k,gear} = n_{k,gear_iCT1} \times i_{gear_iCT1} / i_{gear}$$

where:

$n_{k,gear}$ = rotational speed setpoint k for a specific gear

(where k = 1, 2, 3, …, maximum number of rotational speed setpoints)

(where gear = 1, …, highest gear number)

$n_{k,gear_iCT1}$ = rotational speed setpoint k for the gear with the gear ratio closest to 1 in accordance with subpoint (d)

(where k = 1, 2, 3, …, maximum number of rotational speed setpoints)

i_{gear} = gear ratio of a specific gear [-]

(where gear = 1, …, highest gear number)

i_{gear_iCT1} = gear ratio of the gear with the gear ratio closest to 1

in accordance with subpoint (d) [-]

4.2.6.2.2 Setpoints for torque

The setpoints for either a standalone electric machine system or an IEPC with no shiftable gears shall be defined in accordance with the following provisions:

(a) At least 10 setpoints for torque of the UUT shall be defined for the measurement, located both on the positive (i.e. driving) and negative (i.e. braking) torque side. The lowest and highest torque setpoint shall be defined based on the minimum and maximum torque limits determined in accordance with point 4.2.2.4 for the respective voltage level, where the lowest torque setpoint shall be the overall minimum torque, $T_{min_overall}$, and the highest torque setpoint shall be the overall maximum torque, $T_{max_overall}$, determined from these values.

(b) The remaining 8 or more different torque setpoints shall be located between the lowest and highest torque setpoint. The interval between two adjacent torque setpoints shall not be larger than 22.5 % of the overall maximum torque of the UUT determined in accordance with point 4.2.2.4 for the respective voltage level.

(c) The limit value for positive torque at a particular rotational speed shall be the maximum torque limit at this particular rotational speed setpoint determined in accordance with point 4.2.2.4 for the respective voltage level, minus 5 % of $T_{max_overall}$. All torque setpoints at a particular rotational speed setpoint that are located higher than the limit value for positive torque at this particular rotational speed shall be replaced by one single target torque setpoint located at the maximum torque limit at this particular rotational speed setpoint.

(d) The limit value for negative torque at a particular rotational speed shall be the minimum torque limit at this particular rotational speed setpoint determined in accordance with point 4.2.2.4 for the respective voltage level, minus 5 % of $T_{min_overall}$. All torque setpoints at a particular rotational speed setpoint that are located lower than the limit value for negative torque at this particular rotational speed shall be replaced by one single target torque setpoint located at the minimum torque limit at this particular rotational speed setpoint.

(e) Minimum and maximum torque limitations for a particular rotational speed setpoint shall be determined based on the data generated in accordance with point 4.2.2.4 for the respective voltage level, by using linear interpolation.

In the case of an IEPC with multispeed gearbox, a separate dataset of setpoints for torque of the UUT shall be defined for each single gear based on the following provisions:

(f) The torque setpoints for the gear with the gear ratio closest to 1 (where the gear ratios of two gears have the same distance to a gear ratio of 1, the test shall be performed only for the gear with the higher of the two gear ratios) determined in accordance with subpoints (a) to (e), $T_{j,gear_iCT1}$, shall be used as basis for the further step in subpoints (g) and (h).

(g) These torque setpoints shall be converted to the respective setpoints for all other gears by the following equation:

$$T_{j,gear} = T_{j,gear_iCT1} / i_{gear_iCT1} \times i_{gear}$$

where:

$T_{j,gear}$ = torque setpoint j for a specific gear

(where j = 1, 2, 3, …, maximum number of torque setpoints)

(where gear = 1, …, highest gear number)

$Tj_{,gear_iCT1}$ = torque setpoint j for the gear with the gear ratio closest to 1

in accordance with subpoint (f)

(where j = 1, 2, 3, …, maximum number of torque setpoints)

i_{gear} = gear ratio of a specific gear [-]

(where gear = 1, …, highest gear number)

i_{gear_iCT1} = gear ratio of the gear with the gear ratio closest to 1

in accordance with subpoint (f) [-]

(h) All torque setpoints $T_{j,gear}$ that have an absolute value higher than 10 kNm shall not be required to be measured during the actual test run performed in accordance with point 4.2.6.4.

4.2.6.3 Signals to be measured

Under the operating points specified in accordance with point 4.2.6.2 the electric power to or from the inverter (or DC/DC converter if applicable) and the output torque and speed of the UUT shall be measured.

4.2.6.4 Test sequence

The test sequence consists of steady state setpoints with defined rotational speed and torque at each setpoint in accordance with point 4.2.6.2.

In case an unforeseen interruption occurs, the test sequence may be continued under the following provisions:

— The UUT stays within the testcell, with the ambient temperature in the testcell kept within 25 ±10 °C;

— Before continuing the test the UUT shall be run on the bench for warm-up according to the recommendations of the component manufacturer.

— After the warm-up the test sequence shall be continued at the next lower rotational speed setpoint to the rotational speed setpoint where the interruption occurred.

— At the next lower rotational speed setpoint the test sequence described by subpoint (a) to (m) further below shall be followed, but only for preconditioning purposes without recording any measurement data.

— Recording of measurement data shall be done, starting from the first operating point at the rotational speed setpoint where the interruption occurred.

In the case of an IEPC, the following provisions shall apply:

— The test sequence shall be performed for each single gear sequentially starting from the gear with the highest gear ratio to be continued with the gears in descending order of gear ratio.

— All setpoints within a dataset for a specific gear determined in accordance with point 4.2.6.2 shall be completed before the measurement is continued in a different gear.

— It is allowed to interrupt the test after completion of measurement for each specific gear.

— The use of different torque meters is allowed.

Just before beginning the test at the first setpoint, the UUT shall be run on the bench for warm-up in accordance with the recommendations of the component manufacturer. The first rotational speed setpoint for the actual measured gear for starting the EPMC test is defined at the lowest rotational speed setpoint.

The remaining setpoints for the actual measured gear shall be applied in the following order:

(a) The first operating point at a particular rotational speed setpoint is defined at the highest torque at this specific speed.

(b) The next operating point shall be set at the same speed and the lowest positive (i.e. driving) torque setpoint.

(c) The next operating point shall be set at the same speed and the second highest positive (i.e. driving) torque setpoint.

(d) The next operating point shall be set at the same speed and the second lowest positive (i.e. driving) torque setpoint.

(e) This order of switching from the remaining highest to the remaining lowest torque setpoint shall be continued until all positive (i.e. driving) torque setpoints at a particular rotational speed setpoint are measured.

(f) Before continuing with step (g) the UUT may be cooled down in accordance with the component manufacturer's recommendations by running at a particular setpoint defined by the component manufacturer.

(g) Then measurement of the negative (i.e. braking) torque setpoints at the same rotational speed setpoint shall be performed starting at the lowest torque at this specific speed.

(h) The next operating point shall be set at the same speed and the highest negative (i.e. braking) torque setpoint.

(i) The next operating point shall be set at the same speed and the second lowest negative (i.e. braking) torque setpoint.

(j) The next operating point shall be set at the same speed and the second highest negative (i.e. braking) torque setpoint.

(k) This order of switching from the remaining lowest to the remaining highest torque setpoint shall be continued until all negative (i.e. braking) torque setpoints at a particular rotational speed setpoint are measured.

(l) Before continuing with step (m) the UUT may be cooled down in accordance with the component manufacturer's recommendations by running at a particular setpoint defined by the component manufacturer.

(m) The test shall continue at the next higher rotational speed setpoint by repeating steps (a) to (m) of the defined test sequence above until all rotational speed setpoints for the actual measured gear were completed.

All operating points shall be held for an operating time of at least 5 seconds. During this operating time the rotational speed of the UUT shall be held at the rotational speed setpoint within a tolerance of ±1 % or 20 rpm whatever is larger. Additionally, during this operating time, except for the highest and lowest torque setpoint at each rotational speed setpoint, the torque shall be held at the torque setpoint within a tolerance of ±1 % or ±5 Nm whatever is larger of the value of the torque setpoint.

The electric power to or from the inverter (or DC/DC converter if applicable), the output torque and rotational speed of the UUT shall be recorded as average value over the last two seconds of the operating time.

4.3. Post-processing of measurement data of the UUT

4.3.1 General provisions for post-processing

All post-processing steps defined in points 4.3.2 to 4.3.6 shall be performed for the datasets measured for the two different voltage levels in accordance with point 4.1.3 separately.

4.3.2 Maximum and minimum torque limits

The data for maximum and minimum torque limits determined in accordance with point 4.2.2.4 shall be extended by means of linear extrapolation (using the two closest points) to zero rotational speed and to the maximum operating speed of the UUT as declared by the component manufacturer in the event that the recorded measurement data does not cover these ranges.

4.3.3 Drag curve

The data for the drag curve determined in accordance with point 4.2.3 shall be modified in accordance with the following provisions:

(1) Where the electric power supply to the inverter (or DC/DC converter if applicable) was set inactive or disconnected, the respective values for electric power to the inverter (or DC/DC converter if applicable) shall be set to 0.

(2) Where the output shaft of the UUT was not connected to the load machine (i.e. dynamometer), the respective torque values shall be set to 0.

(3) The data modified in accordance with points (1) and (2) above shall be extended by means of linear extrapolation to the maximum operating speed of the UUT as declared by the component manufacturer where the recorded measurement data does not cover these ranges.

(4) The values of electric power to the inverter (or DC/DC converter if applicable) modified in accordance with points (1) to (3) above shall be seen as virtual mechanical loss power. These values of virtual mechanical loss power shall be converted to virtual drag torque with the respective rotational speed of the output shaft of the UUT.

(5) At each setpoint of rotational speed of the output shaft of the UUT in the data modified in accordance with points (1) to (3) above, the value of virtual drag torque determined in accordance with point (4) above shall be added to the actual torque of the load machine (i.e. dynamometer) to define the total drag torque of the UUT as function of rotational speed.

(6) The values of the total drag torque of the UUT at the lowest rotational speed setpoint, determined from the data modified in accordance with point (5) above, shall be copied to a new entry at 0 rpm rotational speed and added to the data modified in accordance with point (5) above.

4.3.4 EPMC

The data for the EPMC determined in accordance with point 4.2.6.4 shall be extended in accordance with the following provisions for each forward gear measured separately:

(1) The values of all data pairs for output torque and eletric inverter power determined at the lowest rotational speed setpoint shall be copied to a new entry at zero rotational speed.

(2) The values of all data pairs for output torque and eletric inverter power determined at the highest rotational speed setpoint shall be copied to a new entry at the highest rotational speed setpoint times 1.05.

(3) If at a specific rotational speed setpoint (including the newly introduced data in points 1 and 2 above) a torque setpoint determined in accordance with the provisions of point 4.2.6.2.2 in subpoints (a) to (g) was ommited for the actual measurement in accordance with subpoint (h) of point 4.2.6.2.2 a new data point shall be calculated based on the following provisions:

(a) Rotational speed: using the value of the omitted setpoint for the rotational speed

(b) Torque: using the value of the omitted setpoint for torque

(c) Inverter power: calculating a new value by means of linear extrapolation where the slope of the least squares linear regression line determined based on the three actually measured torque points located closest to the torque value from subpoint (b) above for the corresponding rotational speed setpoint shall be applied.

(d) For positive torque values, extrapolated values of inverter power resulting in values lower than the measured one at the actually measured torque point located closest to the torque value from subpoint (b) above shall be set to the inverter power actually measured at the torque point located closest to the torque value from subpoint (b) above.

(e) For negative torque values, extrapolated values of inverter power resulting in values higher than the measured one at the actually measured torque point located closest to the torque value from subpoint (b) above shall be set to the inverter power actually measured at the torque point located closest to the torque value from subpoint (b) above.

(4) At each rotational speed setpoint (including the newly introduced data in points 1 to 3 above) a new data point shall be calculated based on the data at the highest torque setpoint in accordance with the following rules:

(a) Rotational speed: using the same value for the rotational speed

(b) Torque: using the value for torque multiplied by a factor of 1,05

(c) Inverter power: calculating a new value in such a way that the efficiency defined as the ratio of mechanical power to inverter power stays constant

(5) At each rotational speed setpoint (including the newly introduced data in points 1 to 3 above) a new data point shall be calculated based on the data at the lowest torque setpoint in accordance with the following rules:

(a) Rotational speed: using the same value for the rotational speed

(b) Torque: using the value for torque multiplied by a factor of 1.05

(c) Inverter power: calculating a new value in such a way that the efficiency defined as the ratio of inverter power to mechanical power stays constant

4.3.5 Overload characteristics

From the data for the overload characteristics determined in accordance with point 4.2.5.3 an efficiency figure shall be determined by dividing the average mechanical output power over the period of t_{0_maxP} by the average electric power to or from the inverter (or DC/DC converter if applicable) over the period of t_{0_maxP}.

4.3.6 Maximum 30 minutes continuous torque

From the data determined in accordance with point 4.2.4.3 an efficiency figure shall be determined by dividing the average 30 minutes continuous power by the average electric power to or from the inverter (or DC/DC converter if applicable).

From the measurement data for the maximum 30 minutes continuous torque determined in accordance with point 4.2.4.2 the following average values shall be determined from the time-resolved values over the 1 800-second measurement period for each cooling circuit with connection to an external heat exchanger separately:

— cooling power

— coolant temperature at the inlet of the cooling circuit of the UUT

The cooling power shall be determined based on the specific heat capacity of the coolant, the coolant massflow and the temperature difference over the test bed heat exchanger on the side of the UUT.

4.4 Special provisions for testing of IHPCs Type 1

IHPCs Type 1 are virtually split into two separate components for handling in the simulation tool, i.e. an electric machine system and a transmission. Therefore, two separate component data sets shall be determined by following the provisions described in this point.

For component testing of IHPCs Type 1, points 4.1 to 4.2 of this Annex shall apply.

For an IHPC Type 1 the torque and speed shall be measured at the output shaft of the system (i.e. the output side of the gearbox towards the wheels of the vehicle).

The definition of families in accordance with Appendix 13 shall not be allowed for IHPCs Type 1. Therefore, omission of test runs is not allowed and all test runs described in point 4.2 shall be performed for one specific IHPC Type 1. Notwithstanding these provisions, the test of the drag curve in accordance with point 4.2.3 shall be omitted for IHPCs Type 1.

Generating input data for IHPCs Type 1 based on standard values shall not be allowed.

4.4.1 Test runs to be performed for IHPCs Type 1

4.4.1.1 Test runs to determine the total system characteristics

This subpoint describes the details for determining the characteristics of the complete IHPC Type 1 including the losses of the gearbox part within the system.

The following test runs shall be performed in accordance with the provisions defined for IEPC with multispeed gearbox in the respective points. For all of these test runs, the input shaft for feeding propulsion torque into the system shall be either disconnected and rotating freely or shall be fixed without rotating.

Table 2a

Overview of test runs to be performed for IHPC Type 1

Test run	Reference to point
Maximum and minimum torque limits	4.2.2
Maximum 30 minutes continuous torque	4.2.4
Overload characteristics	4.2.5
EPMC	4.2.6

Due to the applicability of the provisions defined for IEPC with multispeed gearbox to IHPCs Type 1, the EPMC shall be measured for each single forward gear in accordance with point 4.2.6.2.

4.4.1.2 Test runs to determine the losses of the gearbox part within the system

This subpoint describes the details for determining the losses of the gearbox part within the system.

Therefore, the system shall be tested in accordance with the provisions in point 3.3 of Annex VI. Notwithstanding these provisions, the following provisions shall be applied:

— The input shaft for feeding propulsion torque into the system shall be connected to and driven by a dynamometer in accordance with the provisions in point 3.3 of Annex VI.

— The power supply from the electric DC powersource to the inverter(s) (or DC/DC converter(s) if applicable) shall be disconnected. In order to allow this disconnection without any parts of the system being damaged, the system may be modified in a way that dummy magnets or dummy rotors are used in the electric machine(s) part for the measurement.

— The torque range as defined in point 3.3.6.3 of Annex VI shall be extended to cover also negative torque values in such a way that the same torque setpoints from the positive side are measured also with a negative algebraic sign.

4.4.2 Post-processing of measurement data of IHPCs Type 1

For post-processing of measurement data of IHPCs Type 1, all provisions as laid down in point 4.3 shall apply unless stated otherwise.

4.4.2.1 Post-processing of data regarding total system characteristics

All measurement data determined in accordance with point 4.4.1.1 shall be handled in accordance with the provisions as laid down in points 4.3.1 to 4.3.6. The provisions of point 4.3.3 shall be omitted since measurement of the drag curve in accordance with point 4.2.3 is not performed for IHPCs Type 1. Where there are specific provisions defined for IEPC with multispeed gearbox in the respective points, such specific provisions shall be applied.

4.4.2.2 Post-processing of data regarding losses of the gearbox part within the system

All measurement data determined in accordance with point 4.4.1.2 shall be handled in accordance with the provisions as laid down in point 3.4 of Annex VI. Notwithstanding these provisions, the following provisions shall be applied:

— The provisions as laid down in points 3.4.2 to 3.4.5 of Annex VI shall be applied analogously also for negative torque values.

— The provisions as laid down in point 3.4.6 of Annex VI shall not be applied.

4.4.2.3 Post-processing of data to derive the specific data of the virtual electric machine system

In order to determine the component data of the virtual electric machine system the following steps shall be applied. The following post-processing steps shall be omitted for the two efficiency figures determined in accordance with points 4.3.5 and 4.3.6 since these efficiency figures only serve for assessment of conformity of the certified CO_2 emissions and fuel consumption related properties.

(a) All speed and torque values of the measurement data handled in accordance with point 4.4.2.1 shall be converted from the output shaft to the input shaft of the IHPC Type 1 in accordance with the following equations. Where the same test run was performed for several gears, the conversion shall be performed for each gear separately.

$$n_{EM,virt} = n_{output} \times i_{gbx}$$

$$T_{EM,virt} = T_{Output} \times \frac{1}{i_{gbx}} + T_{loss,gbx}(n_{EM,virt}, T_{Output} \times \frac{1}{i_{gbx}}, gear)$$

where:

$n_{EM,virt}$ = rotational speed of the virtual electric machine system referring to the input shaft of the IHPC Type 1 [1/min]

n_{output} = measured rotational speed at the output shaft of the IHPC Type 1 [1/min]

i_{gbx} = ratio of rotational speed at the input shaft over the rotational speed at the output shaft of the IHPC Type 1 for a specific gear engaged during the measurement [-]

$T_{EM,virt}$ = torque of the virtual electric machine system referring to the input shaft of the IHPC Type 1 [Nm]

T_{output} = measured torque at the output shaft of the IHPC Type 1 [Nm]

$T_{loss,gbx}$ = torque loss depending on rotational speed and torque at the input shaft of the IHPC Type 1 [Nm]. It shall be calculated by means of two-dimensional linear interpolation from the loss maps of the gearbox determined in accordance with point 4.4.2.2 for the respective gear.

gear = specific gear engaged during the measurement [-]

(b) The electric power maps determined for each forward gear in accordance with point 4.4.2.1 and converted to the input shaft in accordance with subpoint (a) of point 4.4.2.3 shall be used as basis for the following calculations. All values of electric inverter power of these electric power maps shall be converted to the respective maps for the virtual electric machine system by deducting the losses of the gearbox part in accordance with the following equation:

$$P_{el,virt}(n_{EM,virt}, T_{EM,virt}) = P_{el,meas}(n_{EM,virt}, T_{EM,virt}) - T_{loss,gbx}(n_{EM,virt}, T_{EM,virt}, \text{gear}) \times n_{EM,virt}$$

where:

$P_{el,virt}$ electric inverter power of the virtual electric machine system [W]

$n_{EM,virt}$ rotational speed of the virtual electric machine system referring to the input shaft of the IHPC Type 1 determined in accordance with subpoint (a) of point 4.4.2.3 [1/min]

$T_{EM,virt}$ torque of the virtual electric machine system referring to the input shaft of the IHPC Type 1 determined in accordance with subpoint (a) of point 4.4.2.3 [Nm]

$P_{el,meas}$ measured electric inverter power [W]

$T_{loss,gbx}$ torque loss depending on rotational speed and torque at the input shaft of the IHPC Type 1 [Nm]. It shall be calculated by means of two-dimensional linear interpolation from the loss maps of the gearbox determined in accordance with point 4.4.2.2 for the respective gear.

gear specific gear engaged during the measurement [-]

(c) The drag torque values of the virtual electric machine system shall be specified at the same rotational speed setpoints, $n_{EM,virt}$, referring to the input shaft of the IHPC Type 1 as used for the definition of the maximum and minimum torque curve of the virtual electric machine system. Each single value of drag torque in Nm indicated at the different rotational speed setpoints shall be set to zero.

(d) The rotational inertia of the virtual electric machine system shall be calculated by converting the inertia value(s) of the actual electric machine(s) determined in accordance with point 8 of Appendix 8 of this Annex to the corresponding value of rotational inertia referring to the input shaft of the IHPC Type 1.

4.4.3 Generation of input data for the simulation tool

Since IHPCs Type 1 are virtually split into two separate components for handling in the simulation tool, separate component input data shall be determined for an electric machine system and a transmission. The certification number indicated in the input data shall be the same for both components, electric machine system and transmission.

4.4.3.1 Input data of the virtual electric machine system

The input data for the virtual electric machine system shall be generated in accordance with the definitions for the electric machine system in Appendix 15 based on the final data resulting from following the provisions in point 4.4.2.3.

4.4.3.2 Input data of the virtual transmission

The input data for the virtual transmission shall be generated in accordance with the definitions for the transmission in Table 1 to Table 3 of Appendix 12 of Annex VI based on the final data resulting from following the provisions in point 4.4.2.2. The value of the parameter “TransmissionType” in Table 1 shall be set to “IHPC Type 1”.

5. Testing of battery systems or representative battery subsystems

The battery UUT thermal conditioning device and the corresponding thermal conditioning loop at the test bench equipment shall be operational to satisfy the battery UUT thermal conditioning performances, according to the vehicle application and shall enable the test bench equipment to perform the requested test procedure within the battery UUT operational limits

5.1 General provisions

Battery UUT components may be distributed in different devices within the vehicle.

The battery UUT shall be controlled by the BCU, the test bench equipment shall follow the operational limits provided by the BCU via bus communication. The battery UUT thermal conditioning device and the corresponding thermal conditioning loop at the test bench equipment shall be operational in accordance with the controls by the BCU, unless otherwise specified in the given test procedure. The BCU shall enable the test bench equipment to perform the requested test procedure within the battery UUT operational limits. If necessary, the BCU program shall be adapted by the component manufacturer for the requested test procedure but within the operational and safety limits of the battery UUT.

5.1.1 Conditions for thermal equilibration

Thermal equilibration is reached if during a period of 1 hour the deviations between cell temperature as specified by the component manufacturer and temperature of all cell temperature measuring points are lower than ±7 K.

5.1.2 Sign conventions

5.1.2.1 Current

Measured values of current shall have a positive sign for discharging and a negative sign for charging.

5.1.3 Reference location for ambient temperature

The ambient temperature shall be measured within a distance of 1 m to the battery UUT at a point indicated by the component manufacturer.

5.1.4 Thermal conditions

Battery testing temperature, i.e. the target operating temperature of the battery UUT, shall be specified by the component manufacturer. The temperature of all cell temperature measuring points shall be within the limits specified by the component manufacturer during all test runs performed.

For battery UUT with liquid conditioning (i.e. heating or cooling), the temperature of the conditioning fluid shall be recorded at the battery UUT inlet and must be maintained within ±2 K of a value specified by the component manufacturer.

For air cooled battery UUT, the temperature of the battery UUT at a point indicated by the component manufacturer shall be kept within +0/-20 K of the maximum value specified by the component manufacturer.

For all test runs performed the available cooling and/or heating power on the testbench shall be limited to a value declared by the component manufacturer. This value shall be recorded together with the test data.

The available cooling and/or heating power on the testbench shall be determined based on the following procedures and recorded together with the actual component test data:

(1) For liquid conditioning from the massflow of the conditioning fluid and the temperature difference over the heat exchanger on the side of the battery UUT.

(2) For electric conditioning from the voltage and current. The component manufacturer may modify the electric connection of this conditioning unit for the certification of the battery UUT to enable a measurement of the battery UUT characteristics without considering the electric power required for conditioning (e.g. if the conditioning is directly implemented and connected within the battery UUT). Notwithstanding these provisions, the required electric cooling and/or heating power externally provided to the battery UUT by a conditioning unit shall be recorded.

(3) For other types of conditioning based on good engineering judgement and discussion with the type approval authority.

5.2 Preparation cycles

The battery UUT shall be conditioned by performing maximum five cycles of full discharging followed by full charging in order to ensure stabilisation of the system's performance before the actual testing starts.

Consecutive cycles of full discharging followed by full charging shall be performed at the component manufacturer defined operational set temperature until the "preconditioned" status is reached. The criterion for a "preconditioned" battery UUT is that the discharged capacity during two consecutive discharges does not change by a value greater than 3 % of the rated capacity or that five repetitions were performed.

The voltage of the battery UUT shall not fall below the minimum voltage recommended by the component manufacturer at the end of the discharge (the minimum voltage is the lowest voltage under discharge without irreversible damage done to the battery UUT). The termination criteria for the full discharging and the full charging cycles shall be defined by the component manufacturer.

5.2.1 Current levels in preparation cycles for HPBS

Discharging shall be performed at a current of 2C, charging shall be performed in accordance with the recommendations of the component manufacturer.

5.2.2 Current levels in preparation cycles Preconditioning for HEBS

Discharging shall be performed at a current of 1/3C, charging shall be performed in accordance with the recommendations of the component manufacturer.

5.3 Standard cycle

The purpose of a standard cycle (SC) is to ensure the same initial condition for each dedicated test of a battery UUT, as well as the charged energy for COP purposes in accordance with Appendix 12. It shall be performed at the component manufacturer defined operational set temperature.

5.3.1 Standard cycle for HPBS

The SC for HPBS shall consist of the following events in consecutive order: a standard discharge, a rest period, a standard charge and a second rest period.

The standard discharge procedure shall be performed at a current of 1C down to the minimum SOC in accordance with the specifications of the component manufacturer.

The rest period shall start directly after the end of discharge and shall last for 30 minutes.

The standard charge procedure shall be performed in accordance with the specifications of the component manufacturer regarding criteria for end of charge as well as applicable time limits for the overall charging procedure.

The second rest period shall start directly after the end of charge and shall last for 30 minutes.

5.3.2 Standard cycle for HEBS

The SC for HEBS shall consist of the following events in consecutive order: a standard discharge, a rest period, a standard charge and a second rest period.

The standard discharge procedure shall be performed at a current of 1/3C down to the minimum SOC in accordance with the specifications of the component manufacturer.

The rest period shall start directly after the end of discharge and shall last for 30 minutes.

The standard charge procedure shall be performed in accordance with the specifications of the component manufacturer regarding criteria for end of charge as well as applicable time limits for the overall charging procedure.

The second rest period shall start directly after the end of charge and shall last for 30 minutes.

5.4 Test runs to be performed

Before any test runs in accordance with this point are performed the battery UUT shall be subjected to the provisions in accordance with point 5.2.

5.4.1 Test procedure for rated capacity

This test measures the rated capacity of the battery UUT in Ah at constant current discharge rates.

5.4.1.1 Signals to be measured

The following signals shall be recorded during preconditioning, standard cycles performed and the actual test run:

— Charge/Discharge current at the terminals of the battery UUT

— Voltage across the terminals of the battery UUT

— Temperatures of all measuring points of the battery UUT

— Ambient temperature in the testbench

— Heating or cooling power for battery UUT

5.4.1.2 Test run

After the battery UUT was fully charged in accordance with the specifications of the component manufacturer and thermal equilibration in accordance with point 5.1.1 was reached, a standard cycle in accordance with point 5.3 shall be performed.

The actual test run shall start within a period of 3 hours after the end of the standard cycle, otherwise the standard cycle shall be repeated.

The actual test run shall be performed at RT and consist of a constant current discharge at the following discharge rates:

— For HPBS to the component manufacturer's rated 1 C capacity in Ah

— For HEBS to the component manufacturer's rated 1/3C capacity in Ah

All discharge tests shall be terminated at the minimum conditions in accordance with the specifications of the component manufacturer.

5.4.1.3 Interpretation of results

The capacity in Ah obtained from the integrated battery current over time during the actual test run in accordance with point 5.4.1.2 shall be used as value for the rated capacity.

5.4.1.4 Data to be reported

The following data shall be reported:

— Rated capacity determined in accordance with point 5.4.1.3

— Average values over the actual test run of all signals recorded in accordance with point 5.4.1.1

For the purpose of conformity of production testing, also the following values shall be calculated:

— The total charged energy, E_{cha}, from 20 to 80 % SOC during the standard cycle performed prior to the actual test run.

— The total discharged energy, E_{dis}, from 80 to 20 % SOC during the actual test run.

All SOC values used shall be calculated based on the actual measured rated capacity determined in accordance with point 5.4.1.3.

The round trip efficiency η_{BAT} shall be calculated by dividing the total discharged energy, E_{dis}, by the total charged energy, E_{cha} and reported in the information document in accordance with Appendix 5.

5.4.2 Test procedure for open circuit voltage, internal resistance and current limits

This test determines the ohmic resistance for discharge and charge conditions as well as the OCV of the battery UUT as a function of SOC. In addition, the maximum current for discharging and charging as declared by the component manufacturer shall be verified.

5.4.2.1 General provisions for testing

All SOC values used shall be calculated based on the actual measured rated capacity determined in accordance with point 5.4.1.3.

Only where the battery UUT reaches the discharge voltage limit during discharge, shall the current be reduced such that the battery UUT terminal voltage is maintained at the discharge voltage limit throughout the whole discharge pulse.

Only where the battery UUT reaches during charging the charge voltage limit, shall the current be reduced such that the battery UUT terminal voltage is maintained at the charge voltage limit throughout the whole regenerative charge pulse.

If the test equipment cannot provide the current value with the requested accuracy of ±1 % of the target value within 100 ms after a change in the current profile, the respective recorded data shall be discarded and no related values for open circuit voltage and internal resistance shall be calculated from this data.

If the operational limits provided by the BCU via bus communication demand the current to be reduced in order to stay within the operational limits of the battery UUT the test bench equipment shall reduce the respective target current in accordance with the demands of the BCU.

5.4.2.2 Signals to be measured

The following signals shall be recorded during preconditioning and the actual test run:

— Discharge current at the terminals of the battery UUT

— Voltage across the terminals of the battery UUT

— Temperatures of all measuring points of the battery UUT

— Ambient temperature in the testbench

— Heating or cooling power for battery UUT

5.4.2.3 Test run

5.4.2.3.1 Preconditioning

After the battery UUT was fully charged in accordance with the specifications of the component manufacturer and thermal equilibration in accordance with point 5.1.1 was reached, a standard cycle in accordance with point 5.3 shall be performed.

Within a period of 1 to 3 hours after the end of the standard cycle, the actual test run shall be started. Otherwise, the procedure in the preceding paragraph shall be repeated.

5.4.2.3.2 Test procedure

For HPBS, the test shall be performed at five different SOC levels: 80, 65, 50, 35 and 20 %.

For HEBS, the test shall be performed at five different SOC levels: 90, 70, 50, 35 and 20 %.

At the last step at 20 % SOC the component manufacturer may reduce the maximum discharge current of the battery UUT in order for the SOC to stay above the minimum SOC, in accordance with the specifications of the component manufacturer and avoid a deep discharge.

Before the beginning of the actual test runs at each SOC level, the battery UUT shall be preconditioned in accordance with point 5.4.2.3.1.

In order to reach the required SOC levels for testing from the initial condition of the battery UUT, it shall be discharged at a constant current rate of 1C for HPBS and of 1/3C for HEBS followed by a rest period of 30 minutes before the next measurement starts.

The component manufacturer shall prior to the test declare the maximum charge and discharge current at each different SOC level that can be applied throughout the length of the respective time increment of the current pulse defined in accordance with Table 3 for HPBS and Table 4 for HEBS.

The actual test run shall be performed at RT and shall consist of the current profile in accordance with Table 3 for HPBS and in accordance with Table 4 for HEBS.

Table 3

Current profile for HPBS

Time increment [s]	Time cumulative [s]	Target current
0	0	0
20	20	$I_{dischg_max}/3^3$
40	60	0
20	80	$I_{chg_max}/3^3$
40	120	0
20	140	$I_{dischg_max}/3^2$
40	180	0
20	200	$I_{chg_max}/3^2$
40	240	0
20	260	$I_{dischg_max}/3$
40	300	0
20	320	$I_{chg_max}/3$
40	360	0
20	380	I_{dischg_max}
40	420	0
20	440	I_{chg_max}
40	480	0

Table 4

Current profile for HEBS

Time increment [s]	Time cumulative [s]	Target current
0	0	0
120	120	$I_{dischg_max}/3^3$
40	160	0
120	280	$I_{chg_max}/3^3$
40	320	0
120	440	$I_{dischg_max}/3^2$
40	480	0
120	600	$I_{chg_max}/3^2$
40	640	0
120	760	$I_{dischg_max}/3$
40	800	0
120	920	$I_{chg_max}/3$
40	960	0
120	1080	I_{dischg_max}
40	1120	0
120	1240	I_{chg_max}
40	1280	0

Where

I_{dischg_max} is the absolute value of the maximum discharge current specified by the component manufacturer at the specific SOC level that can be applied throughout the length of the respective time increment of the current pulse

I_{chg_max} is the absolute value of the maximum charge current specified by the component manufacturer at the specific SOC level that can be applied throughout the length of the respective time increment of the current pulse

The voltage at time zero of the test run before the first change in target current occurs, i.e. V_0, shall be measured as average value over 100 ms.

For HPBS the following voltages and currents shall be measured:

(1) For each different discharging and charging current pulse level specified in Table 3, the voltage under zero current as average value over the last second before the change in target current occurs, i.e. Vd_{start} for discharging and Vc_{start} for charging, shall be measured.

(2) For each different discharging current pulse level specified in Table 3, the voltage at 2, 10 and 20 seconds after the change in target current occurs (Vd_2, Vd_{10}, Vd_{20}) and the corresponding current (Id_2, Id_{10}, and Id_{20}) shall be measured as average value over 100ms.

(3) For each different charging current pulse level specified in Table 3, the voltage at 2, 10 and 20 seconds after the change in target current occurs (Vc_2, Vc_{10}, Vc_{20}) and the corresponding current (Ic_2, Ic_{10}, and Ic_{20}) shall be measured as average value over 100 ms.

Table 5 gives an overview of voltage and current values to be measured over time after the change in target current occurs for HPBS.

Table 5

Voltage measurement points for each different level of a current pulse (discharging and charging) for HPBS

Time after the change in target current occurs [s]	Discharging (D) or charging (C)	Voltage	Current
2	D	Vd_2	Id_2
10	D	Vd_{10}	Id_{10}
20	D	Vd_{20}	Id_{20}
2	C	Vc_2	Ic_2
10	C	Vc_{10}	Ic_{10}
20	C	Vc_{20}	Ic_{20}

For HEBS the following voltages and currents shall be measured:

(1) For each different discharging and charging current pulse level specified in table 4 the voltage under zero current as average value over the last second before the change in target current occurs, i.e. Vd_{start} for discharging and Vc_{start} for charging, shall be measured.

(2) For each different discharging current pulse level specified in table 4, the voltage at 2, 10 20 and 120 seconds after the change in target current occurs (Vd_2, Vd_{10}, Vd_{20} and Vd_{120}) and the corresponding current (Id_2, Id_{10}, Id_{20} and Id_{120}) shall be measured as average value over 100ms.

(3) For each different charging current pulse level specified in table 4, the voltage at 2, 10, 20 and 120 seconds after the change in target current occurs (Vc_2, Vc_{10}, Vc_{20} and Vc_{120}) and the corresponding current (Ic_2, Ic_{10}, Ic_{20} and Ic_{120}) shall be measured as average value over 100 ms.

Table 6 gives an overview of voltage and current values to be measured over the time after the change in target current occurs for HEBS.

Table 6

Voltage measurement points for each different level of a current pulse (discharging and charging) for HEBS

Time after the change in target current occurs [s]	Discharging (D) or charging (C)	Voltage	Current
2	D	Vd_2	Id_2
10	D	Vd_{10}	Id_{10}
20	D	Vd_{20}	Id_{20}

Time after the change in target current occurs [s]	Discharging (D) or charging (C)	Voltage	Current
120	D	Vd_{120}	Id_{120}
2	C	Vc_2	Ic_2
10	C	Vc_{10}	Ic_{10}
20	C	Vc_{20}	Ic_{20}
120	C	Vc_{120}	Ic_{120}

5.4.2.4 Interpretation of results

The following calculations shall be performed separately for each level of SOC measured in accordance with point 5.4.2.3.

5.4.2.4.1 Calculations for HPBS

(1) For each different discharging current pulse level specified in Table 3, the values for internal resistance shall be calculated from the values of voltage and current measured in accordance with point 5.4.2.3 in accordance with the following equations:

— $R_Id_2 = (Vd_{start} - Vd_2) / Id_2$

— $R_Id_{10} = (Vd_{start} - Vd_{10}) / Id_{10}$

— $R_Id_{20} = (Vd_{start} - Vd_{20}) / Id_{20}$

(2) The internal resistances for discharging R_Id_2_avg, R_Id_{10}_avg, R_Id_{20}_avg shall be calculated as average over all different current pulse levels specified in Table 3 from the individual values calculated under point 1.

(3) For each different charging current pulse level specified in Table 3, the values for internal resistance shall be calculated from the values of voltage and current measured in accordance with point 5.4.2.3 in accordance with the following equations:

— $R_Ic_2 = (Vc_{start} - Vc_2) / Ic_2$

— $R_Ic_{10} = (Vc_{start} - Vc_{10}) / Ic_{10}$

— $R_Ic_{20} = (Vc_{start} - Vc_{20}) / Ic_{20}$

(4) The internal resistances for charging R_Ic_2_avg, R_Ic_{10}_avg, R_Ic_{20}_avg shall be calculated as average over all different current pulse levels specified in Table 3 from the individual values calculated under point 3.

(5) The overall internal resistances R_{I2}, R_{I10} and R_{I20} shall be calculated as average over the respective values for discharging and charging calculated under points 2 and 4.

(6) The open circuit voltage shall be the value of V_0 measured in accordance with point 5.4.2.3 for the respective SOC level.

(7) The limits for maximum discharging current shall be calculated as average value over 20 seconds at the target current I_{dischg_max} for each level of SOC measured in accordance with point 5.4.2.3.

(8) The limits for maximum charging current shall be calculated as average value over 20 seconds at the target current I_{chg_max} for each level of SOC measured in accordance with point 5.4.2.3. Absolute values of the results shall be reported as final values.

5.4.2.4.2 Calculations for HEBS

(1) For each different discharging current pulse level specified in Table 4, the values for internal resistance shall be calculated from the values of voltage and current measured in accordance with point 5.4.2.3 in accordance with the following equations:

— $R_Id_2 = (Vd_{start} - Vd_2) / Id_2$

— $R_Id_{10} = (Vd_{start} - Vd_{10}) / Id_{10}$

— $R_Id_{20} = (Vd_{start} - Vd_{20}) / Id_{20}$

— $R_Id_{120} = (Vd_{start} - Vd_{120}) / Id_{120}$

(2) The internal resistances for discharging R_Id_2_avg, R_Id_{10}_avg, R_Id_{20}_avg and R_Id_{120}_avg shall be calculated as average over all different current pulse levels specified in Table 4 from the individual values calculated under point 1.

(3) For each different charging current pulse level specified in Table 4, the values for internal resistance shall be calculated from the values of voltage and current measured in accordance with point 5.4.2.3 in accordance with the following equations:

— $R_Ic_2 = (Vc_{start} - Vc_2) / Ic_2$

— $R_Ic_{10} = (Vc_{start} - Vc_{10}) / Ic_{10}$

— $R_Ic_{20} = (Vc_{start} - Vc_{20}) / Ic_{20}$

— $R_Ic_{120} = (Vc_{start} - Vc_{120}) / Ic_{120}$

(4) The internal resistances for charging R_Ic_2_avg, R_Ic_{10}_avg, R_Ic_{20}_avg and R_Ic_{120}_avg shall be calculated as average over all different current pulse levels specified in Table 4 from the individual values calculated under point 3.

(5) The overall internal resistances R_{I2}, R_{I10}, R_{I20} and R_{I120} shall be calculated as average over the respective values for discharging and charging calculated under points 2 and 4.

(6) The open circuit voltage shall be the value of V_0 measured in accordance with point 5.4.2.3 for the respective SOC level.

(7) The limits for maximum discharging current shall be calculated as average value over 120 seconds at the target current I_{dischg_max} for each level of SOC measured in accordance with point 5.4.2.3.

(8) The limits for maximum charging current shall be calculated as average value over 120 seconds at the target current I_{chg_max} for each level of SOC measured in accordance with point 5.4.2.3. Absolute values of the results shall be reported as final values.

5.5. Post-processing of measurement data of the battery UUT

The values of OCV dependent on SOC shall be defined based on the values determined for the different SOC levels in accordance with point 6 of point 5.4.2.4.1 for HPBS and 5.4.2.4.2 for HEBS.

The different values of internal resistances dependent on SOC shall be defined based on the values determined for the different SOC levels in accordance with point 5.4.2.4.1(5) for HPBS and 5.4.2.4.2 for HEBS.

The limits for maximum discharging current and maximum charging current shall be defined based on the values as declared by the component manufacturer prior to the test. If a specific value for the maximum discharging current or maximum charging current determined in accordance with point 5.4.2.4.1(7) and (8) for HPBS and 5.4.2.4.2 for HEBS deviates by more than ±2 % from the value declared by the component manufacturer prior to the test, the respective value determined in accordance with points 5.4.2.4.1(7) and (8) for HPBS and 5.4.2.4.2 for HEBS shall be reported.

6. Testing of capacitor systems or representative capacitor subsystems

6.1 General provisions

Capacitor system components of the capacitor UUT may also be distributed in different devices within the vehicle.

The characteristics for a capacitor are hardly dependent on its state of charge or current, respectively. Therefore, only a single test run is prescribed for the calculation of the model input parameters.

6.1.1 Sign convention for current

Measured values of current shall have a positive sign for discharging and a negative sign for charging.

6.1.2 Reference location for ambient temperature

The ambient temperature shall be measured within a distance of 1 m to the capacitor UUT at a point indicated by the component manufacturer of the capacitor UUT.

6.1.3 Thermal conditions

Capacitor testing temperature, i.e. the target operating temperature of the capacitor UUT, shall be specified by the component manufacturer. The temperature of all capacitor cell temperature measuring points shall be within the limits specified by the component manufacturer during all test runs performed.

For capacitor UUT with liquid conditioning (i.e. heating or cooling), the temperature of the conditioning fluid shall be recorded at the capacitor UUT inlet and must be maintained within ±2 K of a value specified by the component manufacturer.

For air cooled capacitor UUT, the temperature at a point indicated by the component manufacturer shall be kept within +0/−20 K of the maximum value specified by the component manufacturer.

For all test runs performed the available cooling and/or heating power on the testbench shall be limited to a value declared by the component manufacturer. This value shall be recorded together with the test data.

The available cooling and/or heating power on the testbench shall be determined based on the following procedures and recorded together with the actual component test data:

(1) For liquid conditioning from the massflow of the conditioning fluid and the temperature difference over the heat exchanger on the side of the capacitor UUT.

(2) For electric conditioning from the voltage and current. The component manufacturer may modify the electric connection of this conditioning unit for the certification of the capacitor UUT to enable a measurement of the capacitor UUT characteristics without considering the electric power required for conditioning (e.g. if the conditioning is directly implemented and connected within the capacitor UUT). Notwithstanding these provisions, the required electric cooling and/or heating power externally provided to the capacitor UUT by a conditioning unit shall be recorded.

(3) For other types of conditioning based on good engineering judgement and discussion with the type approval authority.

6.2 Test conditions

(a) The capacitor UUT shall be placed in a temperature controlled test cell. The ambient temperature shall be conditioned at 25 ±10 °C;

(b) The voltage shall be measured at the terminals of the capacitor UUT.

(c) The thermal conditioning system of the capacitor UUT and the corresponding thermal conditioning loop at the test bench equipment shall be fully operational in accordance with the respective controls.

(d) The control unit shall enable the test bench equipment to perform the requested test procedure within the capacitor UUT operational limits. If necessary, the control unit program shall be adapted by the capacitor UUT component manufacturer for the requested test procedure.

6.3 Capacitor UUT characteristics test

(a) After fully charging and then fully discharging the capacitor UUT to its lowest operating voltage in accordance with the charging method specified by the component manufacturer, it shall be soaked for at least 2 hours, but no more than 6 hours.

(b) The capacitor UUT temperature at the start of the test shall be 25 ± 2 °C. However, 45 ± 2 °C may be selected by reporting to the type approval or certification authority that this temperature level is more representative for the conditions of the typical application.

(c) After the soak time, a complete charge and discharge cycle in accordance with Figure 2 with a constant current I_{test} shall be performed. I_{test} shall be the maximum allowed continuous current for the capacitor UUT as specified by the component manufacturer.

(d) After a waiting period of at least 30 seconds (t_0 to t_1), the capacitor UUT shall be charged with a constant current I_{test} until the maximum operating voltage V_{max} is reached. Then, the charging shall be stopped and the capacitor UUT shall be soaked for 30 seconds (t_2 to t_3) so that the voltage can settle to its final value V_b before the discharging is started. After that the capacitor UUT shall be discharged with a constant current I_{test} until the lowest operating voltage V_{min} is reached. Afterwards (from t_4 onwards) there shall be another waiting period of at least 30 seconds for the voltage to settle to its final value V_c.

(e) The current and voltage over time, respectively I_{meas} and V_{meas}, shall be recorded at a sampling frequency of at least 10 Hz.

(f) The following characteristic values shall be determined from the measurement (illustrated in Figure 2):

V_a is the no-load voltage right before start of the charge pulse

V_b is the no-load voltage right before start of the discharge pulse

V_c is the no-load voltage after the end of the discharge pulse

$\Delta V(t_1)$, $\Delta V(t_3)$ are the voltage changes directly after applying the constant charging or discharging current I_{test} at the time of t_1 and t_3, respectively. These voltage changes shall be determined by applying a linear approximation to the voltage characteristics as defined in detail A of Figure 2 by usage of the least squares method. Data sampling for the straight line approximation shall start once the change in the gradient calculated from two adjacent data points is smaller than 0.5 % when running in the direction of increasing time signal.

Figure 2

Example of voltage curve for the capacitor UUT measurement

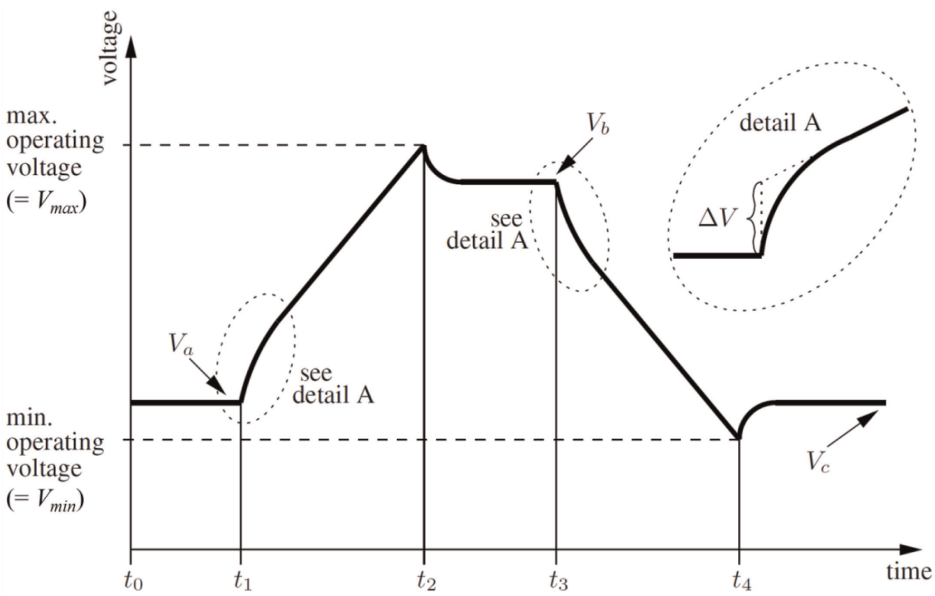

$\Delta V(t_1)$ is the absolute difference of voltages between V_a and the intercept value of the straight-line approximation at the time of t_1.

$\Delta V(t_3)$ is the absolute difference of voltages between V_b and the intercept value of the straight-line approximation at the time of t_3.

$\Delta V(t_2)$ is the absolute difference of voltages between V_{max} and V_b.

$\Delta V(t_4)$ is the absolute difference of voltages between V_{min} and V_c.

6.4. Post-processing of measurement data of the capacitor UUT

6.4.1 Calculation of internal resistance and capacitance

The measurement data obtained in accordance with point 6.3 shall be used to calculate the internal resistance (R) and capacitance (C) values in accordance with the following equations:

(a) The capacitance for charging and discharging shall be calculated as follows:

For charging:

$$C_{charge} = \frac{\sum_{t_1}^{t_2} I_{meas}\Delta t}{V_b - V_a}$$

For discharging:

$$C_{discharge} = \frac{\sum_{t_3}^{t_4} I_{meas}\Delta t}{V_c - V_b}$$

(b) The maximum current for charging and discharging shall be calculated as follows:

For charging:

$$I_{max,charging} = \frac{\sum_{t_1}^{t_2} I_{meas}\Delta t}{t_2 - t_1}$$

For discharging:

$$I_{max,discharging} = \frac{\sum_{t_3}^{t_4} I_{meas}\Delta t}{t_4 - t_3}$$

(c) The internal resistance for charging and discharging shall be calculated as follows:

For charging:

$$R_{charge} = \frac{\Delta V(t_1) - \Delta V(t_2)}{2I_{max,\ charging}}$$

For discharging:

$$R_{discharge} = \frac{\Delta V(t_3) - \Delta V(t_4)}{2I_{max,\ discharging}}$$

(d) For the model, only a single capacitance and resistance are needed and these shall be calculated as follows:

Capacitance C:

$$C = \frac{C_{charge} - C_{discharge}}{2}$$

Resistance R:

$$R = \frac{R_{charge} - R_{discharge}}{2}$$

(e) The maximum voltage shall be defined as the recorded value of V_b and the minimum voltage shall be defined as the recorded value of V_c as defined in accordance with subpoint (f) of point 6.3.

Appendix 1

MODEL OF A CERTIFICATE OF A COMPONENT, SEPARATE TECHNICAL UNIT OR SYSTEM

Maximum format: A4 (210 × 297 mm)

CERTIFICATE ON CO_2 EMISSIONS AND FUEL CONSUMPTION RELATED PROPERTIES OF AN ELECTRIC MACHINE SYSTEM / IEPC / IHPC Type 1 / BATTERY SYSTEM/ CAPACITOR SYSTEM

Administration stamp

Communication concerning:

— granting [1]

— extension[1]

— refusal[1]

— withdrawal[1]

of a certificate on CO_2 emission and fuel consumption related properties of an electric machine system / IEPC / IHPC Type 1 / battery system / capacitor system in accordance with Commission Regulation (EU) 2017/2400.

Commission Regulation (EU) 2017/2400 as last amended by …….

Certification number:

Hash:

Reason for extension:

SECTION I

0.1. Make (trade name of manufacturer):

0.2. Type:

0.3. Means of identification of type

0.3.1. Location of the certification marking:

0.3.2. Method of affixing certification marking:

0.5. Name and address of manufacturer:

0.6. Name(s) and address(es) of assembly plant(s):

0.7. Name and address of the manufacturer's representative (if any)

SECTION II

1. Additional information (where applicable): see Addendum

2. Approval authority responsible for carrying out the tests:

3. Date of test report:

4. Number of test report:

5. Remarks (if any): see Addendum

6. Place:

7. Date:

8. Signature:

Attachments:

Information package. Test report.

Appendix 2

Information Document for an electric machine system

Information document no.:	Issue:
	Date of issue:
	Date of Amendment:

pursuant to …

Electric machine system type / family (if applicable):

…

0. GENERAL

0.1. Name and address of manufacturer

0.2. Make (trade name of manufacturer):

0.3. Electric machine system type:

0.4. Electric machine system family:

0.5. Electric machine system type as separate technical unit / Electric machine system family as separate technical unit

0.6. Commercial name(s) (if available):

0.7. Means of identification of model, if marked on the Electric machine system:

0.8. In the case of components and separate technical units, location and method of affixing of the EC approval mark:

0.9. Name(s) and address(es) of assembly plant(s):

0.10. Name and address of the manufacturer's representative:

PART 1

ESSENTIAL CHARACTERISTICS OF THE (PARENT) ELECTRIC MACHINE SYSTEM AND THE ELECTRIC MACHINE SYSTEM TYPES WITHIN AN ELECTRIC MACHINE SYSTEM FAMILY

	Parent EMS or EMS type	**Family members**		
		#1	**#2**	**#3**
1. General				
1.1. Test voltage(s): V				
1.2. Basic motor rotational speed: 1/min				
1.3. Motor output shaft maximum speed: 1/min				
1.4. (or by default) reducer/gearbox outlet shaft speed: 1/min				
1.5. Maximum power speed: 1/min				
1.6. Maximum power: kW				
1.7. Maximum torque speed: 1/min				
1.8. Maximum torque: Nm				
1.9. Maximum 30 minutes power: kW				
2. Electric machine				
2.1. Working principle				
2.1.1. Direct current (DC)/alternating current (AC):				
2.1.2. Number of phases:				
2.1.3. Excitation / separate / series / compound:				
2.1.4. Synchron / asynchron:				
2.1.5. Rotor coiled / with permanent magnets / with housing:				
2.1.6. Number of poles of the motor:				
2.2. Rotational inertia: kgm^2				
3. Power controller				
3.1. Make:				
3.2. Type:				
3.3. Working principle:				
3.4. Control principle: vectorial / open loop / closed / other (t.b.s.):				
3.5. Maximum effective current supplied to the motor: A				

3.6. For maximum duration of: s

3.7. DC voltage range used (from / to): V

3.8. DC/DC converter is part of the electric machine system in accordance with paragraph 4.1 of this Annex (yes/no):

4. Cooling system

4.1. Motor (liquid / air / other t.b.s.):

4.2. Controller (liquid / air / other t.b.s.):

4.3. Description of the system:

4.4. Principle drawing(s):

4.5. Temperature boundary limits (min/max): K

4.6. At reference position:

4.7. Flow rates (min/max): ltr/min

5. Documented values from component testing

5.1. Efficiency figures for CoP ([1]):

5.2. Cooling system (declaration for each cooling circuit):

5.2.1. maximum coolant mass flow or volume flow or maximum inlet pressure:

5.2.2. maximum coolant temperatures:

5.2.3. maximum available cooling power:

5.2.4. Recorded average values for each test run

5.2.4.1. coolant volume flow or mass flow:

5.2.4.2. coolant temperature at the inlet of the cooling circuit:

5.2.4.3. coolant temperature at the inlet and outlet of the test bed heat exchanger on the side of the EMS:

([1]) determined in accordance with points 4.3.5 and 4.3.6 of this Annex

LIST OF ATTACHMENTS

No.:	Description:	Date of issue:
1	Information on EMS test conditions …	
2	…	

Attachment 1 to Electric machine system information document

Information on test conditions (if applicable)

1.1 …

Appendix 3

Information Document for an IEPC

Information document no.:

Issue:

Date of issue:

Date of Amendment:

pursuant to …

IEPC type / family (if applicable):

…

0. GENERAL

0.1. Name and address of manufacturer

0.2. Make (trade name of manufacturer):

0.3. IEPC type:

0.4. IEPC family:

0.5. IEPC type as separate technical unit / IEPC family as separate technical unit

0.6. Commercial name(s) (if available):

0.7. Means of identification of model, if marked on the IEPC:

0.8. In the case of components and separate technical units, location and method of affixing of the EC approval mark:

0.9. Name(s) and address(es) of assembly plant(s):

0.10. Name and address of the manufacturer's representative:

PART 1

ESSENTIAL CHARACTERISTICS OF THE (PARENT) IEPC AND THE IEPC TYPES WITHIN AN IEPC FAMILY

	Parent IEPC or IEPC type	**Family members**		
		#1	**#2**	**#3**
1. General				
1.1. Test voltage(s): V				
1.2. Basic motor rotational speed: 1/min				
1.3. Motor output shaft maximum speed: 1/min				
1.4. (or by default) reducer/gearbox outlet shaft speed: 1/min				
1.5. Maximum power speed: 1/min				
1.6. Maximum power: kW				
1.7. Maximum torque speed: 1/min				
1.8. Maximum torque: Nm				
1.9. Maximum 30 minutes power: kW				
1.10. Number of electric machines:				
2. Electric machine (for each electric machine):				
2.1. Electric machine ID:				
2.2. Working principle				
2.2.1. Direct current (DC)/alternating current (AC):				
2.2.2. Number of phases:				
2.2.3. Excitation / separate / series / compound:				
2.2.4. Synchron / asynchron:				
2.2.5. Rotor coiled / with permanent magnets / with housing:				
2.2.6. Number of poles of the motor:				
2.3. Rotational inertia: kgm^2				
3. Power controller (for each power controller):				
3.1. Corresponding electric machine ID:				
3.2. Make:				
3.3. Type:				
3.4. Working principle:				

3.5. Control principle: vectorial / open loop / closed / other (t.b.s.):

3.6. Maximum effective current supplied to the motor: A

3.7. For maximum duration of: s

3.8. DC voltage range used (from / to): V

3.9. DC/DC converter is part of the electric machine system in accordance with paragraph 4.1 of this Annex (yes/no):

4. Cooling system

4.1. Motor (liquid / air / other t.b.s.):

4.2. Controller (liquid / air / other t.b.s.):

4.3. Description of the system:

4.4. Principle drawing(s):

4.5. Temperature boundary limits (min/max): K

4.6. At reference position:

4.7. Flow rates (min/max): g/min or ltr/min

5. Gearbox

5.1. Gear ratio, gearscheme and powerflow:

5.2. Center distance for countershaft transmissions:

5.3. Type of bearings at corresponding positions (if fitted):

5.4. Type of shift elements (tooth clutches, including synchronisers or friction clutches) at corresponding positions (where fitted):

5.5. Total number of forward gears:

5.6. Number of tooth shift clutches:

5.7. Number of synchronisers:

5.8. Number of friction clutch plates (except for single dry clutch with 1 or 2 plates):

5.9. Outer diameter of friction clutch plates (except for single dry clutch with 1 or 2 plates):

5.10. Surface roughness of the teeth (incl. drawings):

5.11. Number of dynamic shaft seals:

5.12. Oil flow for lubrication and cooling per transmission input shaft revolution

5.13. Oil viscosity at 100 C (± 10 %):

5.14. System pressure for hydraulically controlled gearboxes:

5.15. Specified oil level in reference to central axis and in accordance with the drawing specification (based on average value between lower and upper tolerance) in static or running condition. The oil level is considered as equal if all rotating transmission parts (except for the oil pump and the drive thereof) are located above the specified oil level:

5.16. Specified oil level (± 1mm):

5.17. Gear ratios [-] and maximum input torque [Nm], maximum input power (kW) and maximum input speed [rpm] (for each forward gear):

6. Differential

6.1. Gear ratio:

6.2. Principle technical specifications:

6.3. Principle drawings:

6.4. Oil volume:

6.5. Oil level:

6.6. Oil specification:

6.7. Bearing type (type, quantity, inner diameter, outer diameter, width and drawing):

6.8. Seal type (main diameter, lip quantity):

6.9. Wheel ends (drawing):

6.9.1. Bearing type (type, quantity, inner diameter, outer diameter, width and drawing):

6.9.2. Seal type (main diameter, lip quantity):

6.9.3. Grease type:

6.10. Number of planetary / spur gears for differential:

6.11. Smallest width of planetary/ spur gears for differential:

7. Documented values from component testing

7.1. Efficiency figures for CoP (*):

7.2. Cooling system (declaration for each cooling circuit):

7.2.1. maximum coolant mass flow or volume flow or maximum inlet pressure:

7.2.2. maximum coolant temperatures:

7.2.3. maximum available cooling power:

7.2.4. Recorded average values for each test run

7.2.4.1. coolant volume flow or mass flow:

7.2.4.2. coolant temperature at the inlet of the cooling circuit:

7.2.4.3. coolant temperature at the inlet and outlet of the test bed heat exchanger on the side of the IEPC:

LIST OF ATTACHMENTS

No.:	Description:	Date of issue:
1	Information on IEPC test conditions …	
2	…	

Attachment 1 to IEPC information document

8. Information on test conditions (if applicable)

8.1. Maximum tested input speed [rpm]

8.2. Maximum tested input torque [Nm]

Appendix 4

Information Document for an IHPC Type 1

For IHPCs Type 1 the information document shall consist of the applicable parts of the information document for electric machine systems in accordance with Appendix 2 of this Annex and of the information document for transmissions in accordance with Appendix 2 of Annex VI.

Appendix 5

Information Document for a battery system or a representative battery subsystem type

---

Information document no.:

Issue:

Date of issue:

Date of Amendment:

pursuant to …

Battery system or representative battery subsystem type:

…

0. GENERAL

0.1. Name and address of manufacturer

0.2. Make (trade name of manufacturer):

0.3. Battery system type:

0.4. -

0.5. Battery system type as separate technical unit

0.6. Commercial name(s) (if available):

0.7. Means of identification of model, if marked on the Battery system:

0.8. In the case of components and separate technical units, location and method of affixing of the EC approval mark:

0.9. Name(s) and address(es) of assembly plant(s):

0.10. Name and address of the manufacturer's representative:

PART 1

ESSENTIAL CHARACTERISTICS OF THE BATTERY SYSTEM OR THE REPRESENTATIVE BATTERY SUBSYSTEM TYPE

Battery (sub)system type

1. General

1.1. Complete system or representative subsystem:

1.2. HPBS / HEBS:

1.3. Principle technical specifications:

1.4. Cell chemistry:

1.5. Number of cells in series:

1.6. Number of cells in parallel:

1.7. Representative junction box with fuses and breakers included in tested system (yes/no):

1.8. Representative serial connectors included in the tested system (yes/no):

2. Conditioning system

2.1. Liquid / air / other t.b.s.:

2.2. Description of the system:

2.3. Principle drawing(s):

2.4. Temperature boundary limits (min/max): K

2.5. At reference position:

2.6. Flow rates (min/max): ltr/min

3. Documented values from component testing

3.1. Round trip efficiency for CoP (**):

3.2. Maximum discharge current for CoP:

3.3. Maximum charge current for CoP:

3.4. Testing temperature (target operating temperature declared):

3.5. Conditioning system (indicate for each test run performed)

3.5.1. Cooling or heating required:

3.5.2. Maximum available cooling or heating power:

LIST OF ATTACHMENTS

No.:	Description:	Date of issue:
1	Information on Battery system test conditions …	
2	…	

Attachment 1 to Battery system information document

Information on test conditions (if applicable)

1.1 …

Appendix 6

Information Document for a capacitor system or a representative capacitor subsystem type

---

Information document no.:

Issue:

Date of issue:

Date of Amendment:

pursuant to …

Capacitor system or representative capacitor subsystem type:

…

0. GENERAL

0.1. Name and address of manufacturer

0.2. Make (trade name of manufacturer):

0.3. Capacitor system type:

0.4. Capacitor system family:

0.5. Capacitor system type as separate technical unit / Capacitor system family as separate technical unit

0.6. Commercial name(s) (if available):

0.7. Means of identification of model, if marked on the Capacitor system:

0.8. In the case of components and separate technical units, location and method of affixing of the EC approval mark:

0.9. Name(s) and address(es) of assembly plant(s):

0.10. Name and address of the manufacturer's representative:

PART 1

ESSENTIAL CHARACTERISTICS OF THE CAPACITOR SYSTEM OR THE REPRESENTATIVE CAPACITOR SUBSYSTEM TYPE

Capacitor (sub)system type

1. General

1.1. Complete system or representative subsystem:

1.2. Principle technical specifications:

1.3. Cell technology and specification:

1.4. Number of cells in series:

1.5. Number of cells in parallel:

1.6. Representative junction box with fuses and breakers included in tested system (yes/no):

1.7. Representative serial connectors included in the tested system (yes/no):

2. Conditioning system

2.1. Liquid / air / other t.b.s.:

2.2. Description of the system:

2.3. Principle drawing(s):

2.4. Temperature boundary limits (min/max): K

2.5. At reference position:

2.6. Flow rates (min/max): ltr/min

3. Documented values from component testing

3.1. Testing temperature (target operating temperature declared):

3.2. Conditioning system (indicate for each test run performed)

3.2.1. Cooling or heating required:

3.2.2. Maximum available cooling or heating power:

LIST OF ATTACHMENTS

No.:	Description:	Date of issue:
1	Information on Capacitor system test conditions …	
2	…	

Attachment 1 to Capacitor system information document

Information on test conditions (if applicable)

1.1 …

Appendix 7

(reserved)

Appendix 8

Standard values for electric machine system

The following steps shall be performed to generate the input data for the electric machine system based on standard values:

— Step 1: UN Regulation No. 85 shall be applied for this Appendix unless stated otherwise.

— Step 2: The maximum torque values as a function of the rotational speed shall be determined from the data generated in accordance with paragraph 5.3.1.4 of UN Regulation No. 85. The data shall be extended in accordance with point 4.3.2 of this Annex.

— Step 3: The minimum torque values as a function of the rotational speed shall be determined by multiplying the torque values from Step 2 above by minus one.

— Step 4: The maximum 30 minutes continuous torque and the corresponding rotational speed shall be determined from the data generated in accordance with paragraph 5.3.2.3 of UN Regulation No. 85 as average values over the 30 minutes period. In case no value for the maximum 30 minutes continuous torque in accordance with Regulation No. 85 can be determined or the value determined is 0 Nm, the applicable input data shall be set to 0 Nm and the corresponding rotational speed shall be set to the rated speed determined from the data generated in accordance with Step 2 above.

— Step 5: The overload characteristics shall be determined from the data generated in accordance with Step 2 above. The overload torque and the corresponding rotational speed shall be calculated as average values over the speed range where the power is equal or greater than 90 % of the maximum power. The overload duration t_{0_maxP} shall be defined by the whole duration of the test run performed in accordance with Step 2 above multiplied by a factor of 0,25.

— Step 6: The electric power consumption map shall be determined in accordance with the following provisions:

(a) A normalised power loss map shall be calculated as a function of normalised speed and torque values in accordance with the following equation:

$$P_{loss,norm}(T_{norm,i}, \omega_{norm,j}) = \sum_{m,n=0}^{3} k_{mn} |T_{norm,i}|^m |\omega_{norm,j}|^n$$

where:

$P_{loss,norm}$ = normalised loss power [–]

$T_{norm,i}$ = normalised torque for all gridpoints defined in accordance with subpoint (b)(ii) below [–]

$\omega_{norm,j}$ = normalised speed for all gridpoints defined in accordance with subpoint (b)(i) below [–]

k = loss coefficient [–]

m = index regarding torque dependent losses running from 0 to 3 [–]

n = index regarding speed dependent losses running from 0 to 3 [–]

(b) The normalised speed and torque values to be used for the equation in subpoint (a) above defining the grid points of the normalised loss map shall be:

(i) normalised speed: 0,02, 0,20, 0,40, 0,60, 0,80, 1,00, 1,20, 1,40, 1,60, 1,80, 2,00, 2,20, 2,40, 2,60, 2,80, 3,00, 3,20, 3,40, 3,60, 3,80, 4,00 Where the highest rotational speed determined from the data generated in accordance with Step 2 above is located higher than a normalised speed value of 4,00, additional values of normalised speed with an increment of 0,2 shall be added to the existing list in order to cover the required speed range.

(ii) normalised torque: – 1,00, – 0,95, – 0,90, – 0,85, – 0,80, – 0,75, – 0,70, – 0,65, – 0,60, – 0,55, – 0,50, – 0,45, – 0,40, – 0,35, – 0,30, – 0,25, – 0,20, – 0,15, – 0,10, – 0,05, – 0,01, 0,01, 0,05, 0,10, 0,15, 0,20, 0,25, 0,30, 0,35, 0,40, 0,45, 0,50, 0,55, 0,60, 0,65, 0,70, 0,75, 0,80, 0,85, 0,90, 0,95, 1,00

(c) The loss coefficient k to be used for the equation in subpoint (a) above shall be defined depending on the indices m and n in accordance with the following tables:

(i) In the case of an electric machine of the type PSM:

		n			
		0	**1**	**2**	**3**
m	**3**	0	0	0	0
	2	0,018	0,001	0,03	0
	1	0,0067	0	0	0
	0	0	0,005	0,0025	0,003

(ii) In the case of an electric machine of all other types except PSM:

		n			
		0	**1**	**2**	**3**
m	**3**	0	0	0	0
	2	0,1	0,03	0,03	0
	1	0,01	0	0,001	0
	0	0,003	0	0,001	0,001

(d) From the normalised power loss map determined in accordance with subpoints (a) to (c) above, the efficiency shall be calculated in accordance with the following provisions:

(i) The grid points for the normalised speed shall be: 0,02, 0,20, 0,40, 0,60, 0,80, 1,00, 1,20, 1,40, 1,60, 1,80, 2,00, 2,20, 2,40, 2,60, 2,80, 3,00, 3,20, 3,40, 3,60, 3,80, 4,00

Where the highest rotational speed determined from the data generated in accordance with Step 2 above is located higher than a normalised speed value of 4,00, additional values of normalised speed with an increment of 0,2 shall be added to the existing list in order to cover the required speed range.

(ii) The grid points for the normalised torque shall be: – 1,00, – 0,95, – 0,90, – 0,85, – 0,80, – 0,75, – 0,70, – 0,65, – 0,60, – 0,55, – 0,50, – 0,45, – 0,40, – 0,35, – 0,30, – 0,25, – 0,20, – 0,15, – 0,10, – 0,05, – 0,01, 0,01, 0,05, 0,10, 0,15, 0,20, 0,25, 0,30, 0,35, 0,40, 0,45, 0,50, 0,55, 0,60, 0,65, 0,70, 0,75, 0,80, 0,85, 0,90, 0,95, 1,00

(iii) For each gridpoint defined in accordance with subpoints (d)(i) and (d)(ii) above the efficiency η shall be calculated in accordance with the following equations:

— Where the actual value of the grid point for the normalised torque is smaller than zero:

$$\eta(T_{norm,i}, \omega_{norm,j}) = \frac{T_{norm,i} \times \omega_{norm,j} + P_{loss,norm}(T_{norm,i}, \omega_{norm,j})}{T_{norm,i} \times \omega_{norm,j}} \times 0{,}96$$

Where the resulting value for η is smaller than zero, it shall be set to zero.

— Where the actual value of the grid point for the normalised torque is larger than zero:

$$\eta(T_{norm,i}, \omega_{norm,j}) = \frac{T_{norm,i} \times \omega_{norm,j}}{T_{norm,i} \times \omega_{norm,j} + P_{loss,norm}(T_{norm,i}, \omega_{norm,j})} \times 0{,}96$$

where:

η = efficiency [–]

$T_{norm,i}$ = normalised torque for all gridpoints defined in accordance with subpoint (d)(ii) above [–]

$\omega_{norm,j}$ = normalised speed for all gridpoints defined in accordance with subpoint (d)(i) above [–]

$P_{loss,norm}$ = normalised loss power determined in accordance with subpoints (a) to (c) above [–]

(e) From the efficiency map determined in accordance with subpoint (d) above, the actual power loss map of the electric machine system shall be calculated in accordance with the following provisions:

(i) For each gridpoint of normalised speed defined in accordance with subpoint (d)(i) above the actual speed values n_j shall be calculated in accordance with the following equation:

$$n_j = \omega_{norm,j} \times n_{rated}$$

where:

n_j = actual speed [1/min]

$\omega_{norm,j}$ = normalised speed for all gridpoints defined in accordance with subpoint (d)(i) above [–]

n_{rated} = rated speed of the electric machine system determined from the data generated in accordance with Step 2 above [1/min]

(ii) For each gridpoint of normalised torque defined in accordance with subpoint (d)(ii) above the actual torque values T_i shall be calculated in accordance with the following equation:

$$T_i = T_{norm,i} \times T_{max}$$

where:

T_i = actual torque [Nm]

$T_{norm,i}$ = normalised torque for all gridpoints defined in accordance with subpoint (d)(ii) above [–]

T_{max} = overall maximum torque of the electric machine system determined from the data generated in accordance with Step 2 above [Nm]

(iii) For each gridpoint defined in accordance with subpoints (e)(i) and (e)(ii) above the actual power loss shall be calculated in accordance with the following equation:

$$P_{loss}(T_i, n_j) = (1 - n(\frac{T_i}{T_{max}}, \frac{n_j}{n_{rated}})) \times |T_i| \times n_j \times \frac{2\pi}{60}$$

where:

P_{loss} = actual loss power [W]

T_i = actual torque [Nm]

n_j = actual speed [1/min]

η = efficiency dependent on normalised speed and torque determined in accordance with subpoint (d) above [–]

T_{max} = overall maximum torque of the electric machine system determined from the data generated in accordance with Step 2 above [Nm]

n_{rated} = rated speed of the electric machine system determined from the data generated in accordance with Step 2 above [1/min]

(iv) For each gridpoint defined in accordance with subpoints (e)(i) and (e)(ii) above the actual electric inverter power shall be calculated in accordance with the following equation:

$$P_{el}(T_i, n_j) = P_{loss}(T_i, n_j) + T_i \times n_j \times \frac{2\pi}{60}$$

where:

P_{el} = actual electric inverter power [W]

P_{loss} = actual loss power [W]

T_i = actual torque [Nm]

n_j = actual speed [1/min]

(f) The data of the actual electric power map determined in accordance with subpoint (e) above shall be extended in accordance with subpoints (1), (2), (4) and (5) of point 4.3.4 of this Annex.

— Step 7: The drag curve shall be calculated based on the actual power loss map determined in accordance with subpoint (e) above in accordance with the following provisions:

(a) From the power loss values for the two gridpoints defined by the normalised torque $\frac{T_i}{T_{max}} = 0{,}01$, and values of 1,00 and 4,00 for normalised speed $\frac{n_j}{n_{rated}}$, the drag torque depending on actual speed and torque shall be calculated in accordance with the following equation:

$$T_{drag}\left(T_i \middle| \frac{T_i}{T_{max}} = 0{,}01, n_j \middle| \frac{n_j}{n_{rated}} = \{1{,}00; 4{,}00\}\right) = -P_{loss}\left(T_i \middle| \frac{T_i}{T_{max}} = 0{,}01, n_j \middle| \frac{n_j}{n_{rated}} = \{1{,}00; 4{,}00\}\right) \times \frac{60}{2\pi \times n_j}$$

where:

T_{drag} = actual drag torque [Nm]

T_i = actual torque [Nm]

T_{max} = overall maximum torque of the electric machine system determined from the data generated in accordance with Step 2 above [Nm]

n_j = actual speed [1/min]

n_{rated} = rated speed of the electric machine system determined from the data generated in accordance with Step 2 above [1/min]

P_{loss} = actual loss power [W]

(b) From the two values of drag torque determined in accordance with subpoint (a) above, a third value of drag torque at zero rotational speed shall be calculated by means of linear extrapolation.

(c) From the two values of drag torque determined in accordance with subpoint (a) above, a fourth value of drag torque at the maximum normalised speed value defined in accordance with subpoint (b)(i) of Step 6 above shall be calculated by means of linear extrapolation.

— Step 8: The rotational inertia shall be determined by one of the following options:

(a) Option 1: Based on the actual rotational inertia defined by the geometric form and the density of the respective materials of the rotor of the electric machine. Data and methods from a CAD software tool may be used to derive the actual rotational inertia of the rotor of the electric machine. The detailed method for determining the rotational inertia shall be agreed with the type approval authority.

(b) Option 2: Based on the outer dimensions of the rotor of the electric machine. A hollow cylinder shall be defined to fit the dimensions of the rotor of the electric machine in a way that:

(i) The outer diameter of the cylinder matches the point of the rotor with the largest distance from the rotational axis of the rotor assessed along a straight line orthogonal to the rotational axis of the rotor.

(ii) The inner diameter of the cylinder matches the point of the rotor with the smallest distance from the rotational axis of the rotor assessed along a straight line orthogonal to the rotational axis of the rotor.

(iii) The length of the cylinder matches the distance between the two points located furthest from each other assessed along a straight line parallel to the rotational axis of the rotor.

For the hollow cylinder defined in accordance with subpoints (i) to (iii) above the rotational inertia shall be calculated with a material density of 7 850 kg/m^3.

Appendix 9

Standard values for IEPC

In order to allow using the provisions defined in this Appendix to generate input data for IEPC based fully or partially on standard values, the following conditions shall be fulfilled.

Where more than one electric machine system is part of the IEPC, all electric machines shall have the exact same specifications. Where more than one electric machine system is part of the IEPC, all electric machines shall be connected to the torque path of the IEPC at the same reference position (i.e. either upstream of gearbox or downstream of gearbox) where all electric machines shall be run at the same rotational speed at this reference position and their individual torque (power) shall be added by any kind of summation gearbox.

(1) One of the following options shall be used to generate the input data for IEPC, based fully or partially on standard values:

— Option 1: only standard values for all components part of the IEPC

(a) The standard values for the electric machine system as part of the IEPC shall be determined in accordance with Appendix 8. Where multiple electric machines are part of the IEPC, the standard values in accordance with Appendix 8 shall be determined for a single electric machine and all figures for torque and power (mechanical and electrical) shall be multiplied by the total number of electric machines being part of the IEPC. The resulting values from this multiplication shall be used for all further steps in this Appendix.

The value for rotational inertia determined in accordance with Step 8 of Appendix 8 of this Annex shall be multiplied by the total number of electric machines being part of the IEPC.

(b) Where a gearbox is included in the IEPC, the standard values for the IEPC shall be determined for each forward gear separately for the electric power consumption map, and only for the gear with the gear ratio closest to 1 for all other input data in accordance with the following procedure:

(i) The standard values for losses in the gearbox shall be determined in accordance with point (2) of this Appendix.

(ii) For step number (i) above the rotational speed and torque points defined at the shaft of the electric machine system determined in accordance with subpoint (a) above shall be used as rotational speed and torque values at the input shaft of the gearbox.

(iii) In order to generate the required input data for IEPC in accordance with Appendix 15 referring to the output shaft of the gearbox, all torque values referring to the output shaft of the electric machine determined in accordance with subpoint (a) above shall be converted to the output shaft of the gearbox by the following equation:

$$T_{i,GBX} = (T_{i,EM} - T_{i,l,in}\ (n_{j,EM}, T_{i,EM}, gear)) \times i_{gear}$$

where:

$T_{i,GBX}$ = torque at output shaft of gearbox

$T_{i,EM}$ = torque at output shaft of electric machine system

$T_{i,l,in}$ = torque loss for each shiftable forward gear related to the input shaft of the gearbox parts of the IEPC determined in accordance with point (b)(i) above

$n_{j,EM}$ = Speed at the output shaft of electric machine system at which $T_{i,EM}$ was measured [rpm]

i_{gear} = gear ratio of a specific gear [-]

(where gear = 1, …, highest gear number)

(iv) In order to generate the required input data for IEPC in accordance with Appendix 15 referring to the output shaft of the gearbox, all speed values referring to the output shaft of the electric machine determined in accordance with subpoint (a) above shall be converted to the output shaft of the gearbox by the following equation:

$$n_{j,GBX} = n_{j,EM} / i_{gear}$$

where:

$n_{j,EM}$ = Speed at the output shaft of electric machine [rpm]

i_{gear} = gear ratio of a specific gear [-]

(where gear = 1, …, highest gear number)

(c) Where a differential is included in the IEPC, the standard values for the differential shall be determined for each forward gear separately for the electric power consumption map and only for the for the gear with the gear ratio closest to 1 for all other input data in accordance with the following steps:

(i) The standard values for losses in the differential shall be determined in accordance with point (3) of this Appendix.

(ii) The torque points defined at the output shaft of the gearbox being part of the IEPC determined in accordance with subpoint (b) above shall be used as torque values at the input of the differential. Where no gearbox is included in the IEPC, the torque points defined at the output shaft of the electric machine system determined in accordance with subpoint (a) above shall be used as torque values at the input of the differential for step number (i) above.

(iii) In order to generate the required input data for IEPC in accordance with Appendix 15 referring to the output of the differential, all torque values referring to the output shaft of either the gearbox (where a gearbox is included in the IEPC) determined in accordance with step number (iii) of subpoint (b) above or the electric machine system (in the case that no gearbox is included in the IEPC) determined in accordance with subpoint (a) above shall be converted to the output of the differential by the following equation:

$$T_{i,diff,out} = (T_{i,diff,in} - T_{i,diff›l,in}\ (T_{i,diff,in})) \times i_{diff}$$

where:

$T_{i,diff,out}$ = torque at output of differential

$T_{i,diff,in}$ = torque at input of differential

$T_{i,diff›l,in}$ = torque loss related to the input of the differential dependent on the input torque determined in accordance with point (c)(i) above

i_{diff} = differential gear ratio [-]

(iv) In order to generate the required input data for IEPC in accordance with Appendix 15 referring to the output of the differential, all speed values referring to the output shaft of either the gearbox (where a gearbox is included in the IEPC) determined in accordance with step number (iv) of subpoint (b) above or the electric machine system (where no gearbox is included in the IEPC) determined in accordance with subpoint (a) above shall be converted to the output of the differential by the following equation:

$$n_{j,diff,out} = n_{j,diff,in} / i_{diff}$$

where:

$n_{j,diff,in}$ = speed at input of differential [rpm]

i_{diff} = differential gear ratio [-]

— Option 2: measurement of electric machine system as part of the IEPC and standard values for other components of IEPC

(a) The measured component data for the electric machine system as part of the IEPC shall be determined in accordance with point 4 of this Annex. In the case of multiple electric machines being part of the IEPC, the component data shall be determined for a single electric machine and all figures for torque and power (mechanical and electrical) shall be multiplied by the total number of electric machines being part of the IEPC. The resulting values from this multiplication shall be used for all further steps in this Appendix.

The value for rotational inertia determined in accordance with point 8 of Appendix 8 of this Annex shall be multiplied by the total number of electric machines being part of the IEPC.

(b) Where a gearbox is included in the IEPC, the standard values for the IEPC shall be determined for each forward gear separately for the electric power consumption map and only for the gear with the gear ratio closest to 1 for all other input data in accordance with the provisions of Option 1(b) above. In this context all references in Option 1(b) to subpoint (a) shall be understood as references to subpoint (a) of Option 2.

(c) Where a differential is included in the IEPC, the standard values for the differential shall be determined for each forward gear separately for the electric power consumption map and only for the gear with the gear ratio closest to 1 for all other input data in accordance with Option 1(c) above. In this context all references in Option 1(c) to subpoint (b) shall be understood as references to subpoint (b) of Option 2.

(2) IEPC internal component gearbox

The torque loss $T_{gbx,l,in}$ for each shiftable forward gear related to the input shaft of the gearbox parts of the IEPC shall be calculated in accordance with the following provisions:

(a) $T_{gbx,l,in}(n_{in}, T_{in}, gear) = T_{d0} + T_{d1000} \times n_{in} / 1000\ rpm + f_{T,gear} \times T_{in}$

where:

$T_{gbx,l,in}$ = Torque loss related to the input shaft [Nm]

T_{dx} = Drag torque at x rpm [Nm]

n_{in} = Speed at the input shaft [rpm]

$f_{T,gear}$ = Gear dependent torque loss coefficient [-];

determined acc. to subpoints (b)-(f) below

T_{in} = Torque at the input shaft [Nm]

gear = 1, …, highest gear number [-]

(b) The values of the equation shall be determined for all transmission gears located downstream of the EM output shaft.

(c) Where a differential is included in the IEPC, the values of the equation shall be determined for all transmission gears located downstream of the EM output shaft and upstream of, but excluding the gear mesh with the differential input gear. The gear mesh with the differential input gear can be an external-external gear mesh (either spur or bevel) or a single planetary gearset.

(d) In the case of wheel hub motors, the values of the equation shall be determined for all transmission gears located downstream of the EM output shaft and upstream of the wheel hub.

(e) The value for f_T shall be determined in accordance with paragraph 3.1.1 of Annex VI.

(f) The value for f_T shall be 0,007 for a direct gear.

(g) The values for T_{d0} and T_{d1000} shall be 0,0075 × $T_{max,in}$ for gearboxes with more than 2 friction shift clutches.

(h) The values for T_{d0} and T_{d1000} shall be 0,0025 × $T_{max,in}$ for all other gearboxes.

(i) $T_{max,in}$ shall be the overall maximum value of all individual maximum allowed input torque for each forward gear of the gearbox in [Nm].

(3) IEPC internal component differential

The torque loss $T_{diff,l,in}$ related to the input of the differential parts of the IEPC shall be calculated in accordance with the following provisions:

(a) $T_{diff,l,in}(T_{in}) = \eta_{diff} \times T_{diff,d0} / i_{diff} + (1- \eta_{diff}) \times T_{in}$

where:

$T_{diff,l,in}$ = Torque loss related to the input of the differential [Nm]

$T_{diff,d0}$ = Drag torque [Nm]

determined acc. to subpoints (e)-(f) below

η_{diff} = Torque dependent efficiency [-];

determined acc. to subpoints (b)-(d) below

T_{in} = Torque at the input of the differential [Nm]

i_{diff} = differential gear ratio [-]

(b) The values of the equation shall be determined for all gear meshes of the differential including the gear mesh with the differential input gear.

(c) The value for η_{diff} shall be determined in accordance with paragraph 3.1.1 of Annex VI, where in the respective equations η_m shall be set to 0,98 in the case of a bevel gear mesh.

(d) The losses in the differential internal gears are shall be ignored for the calculations performed in accordance with subpoints (b)-(c) above.

(e) In the case of a differential that includes a bevel gear mesh at the differential crown gear, the value for $T_{diff,d0}$ shall be determined based on the following equation: $T_{diff,d0} = 25\ Nm + 15\ Nm \times i_{diff}$

(f) In the case of a differential that includes a spur gear mesh or single planetary gearset at the differential input gear, the value for $T_{diff,d0}$ shall be determined based on the following equation: $T_{diff,d0} = 25\ Nm + 5\ Nm \times i_{diff}$

Appendix 10

Standard values for REESS

(1) Battery system or representative battery subsystem

The following steps shall be performed to generate the input data for the battery system or representative battery subsystem based on standard values:

(a) The battery type shall be determined based on the numerical ratio between maximum current in A (as indicated in accordance with point 1.4.4 of Annex 6 – Appendix 2 of UN Regulation No. 100 (***) and capacity in Ah (as indicated in accordance with point 1.4.3 of Annex 6 – Appendix 2 of UN Regulation No. 100). The battery type shall be "high-energy battery system (HEBS)" where this ratio is lower than 10 and shall be "high-power battery system (HPBS)" where this ratio is equal to or higher than 10.

(b) The rated capacity shall be the value in Ah as indicated in accordance with paragraph 1.4.3 of Annex 6 – Appendix 2 of UN Regulation No. 100.

(c) The OCV as a function of SOC shall be determined based on the nominal voltage in V, V_{nom}, as indicated in accordance with paragraph 1.4.1 of Annex 6 – Appendix 2 of UN Regulation No. 100. The values of OCV for different levels of SOC shall be calculated in accordance with the following table:

SOC [%]	OCV [V]
0	$0{,}88 \times V_{nom}$
10	$0{,}94 \times V_{nom}$
50	$1{,}00 \times V_{nom}$
90	$1{,}06 \times V_{nom}$
100	$1{,}12 \times V_{nom}$

(d) The DCIR shall be determined in accordance with the following provisions:

(i) For HPBS in accordance with subpoint (a) above the DCIR shall be calculated by dividing the specific resistance of 25 [mOhm × Ah] by the rated capacity in Ah as defined in accordance with subpoint (b) above.

(ii) For HEBS in accordance with subpoint (a) above the DCIR shall be calculated by dividing the specific resistance of 140 [mOhm × Ah] by the rated capacity in Ah as defined in accordance with subpoint (b) above.

(e) The values for maximum charging and maximum discharging current shall be determined in accordance with the following provisions:

(i) For HPBS in accordance with subpoint (a) above the values for both, maximum charging and maximum discharging current, shall be set to the respective current in A corresponding to 10C.

(ii) For HEBS in accordance with subpoint (a) above the values for both, maximum charging and maximum discharging current, shall be set to the respective current in A corresponding to 1C.

Absolute values for both, maximum charging and maximum discharging current, shall be used as final values.

(2) Capacitor system or representative capacitor subsystem

The following steps shall be performed to generate the input data for the capacitor system or representative capacitor subsystem based on standard values:

(a) The capacitance shall be the rated capacitance as indicated in the datasheet of the capacitor system or representative capacitor subsystem. The actual capacitance of the capacitor system or representative capacitor subsystem may be determined by scaling up the rated capacitance of a single capacitor cell in accordance with the arrangement (i.e. series and/or parallel) of the single cells in the capacitor system or representative capacitor subsystem.

(b) The maximum voltage, $V_{max,Cap}$, shall be the rated voltage as indicated in the datasheet of the capacitor system or representative capacitor subsystem. The actual maximum voltage of the capacitor system or representative capacitor subsystem may be determined by scaling up the rated voltage of a single capacitor cell in accordance with the arrangement (i.e. series and/or parallel) of the single cells in the capacitor system or representative capacitor subsystem.

(c) The minimum voltage, $V_{min,Cap}$, shall be the value of $V_{max,Cap}$ determined in accordance with subpoint (b) above multiplied by 0,45.

(d) The internal resistance shall be determined in accordance with the following equation:

$$R_{I,Cap} = R_{I,ref} \times \frac{V_{max,Cap} - V_{min,Cap}}{0{,}55 \times V_{ref}} \times \frac{C_{ref}}{C_{Cap}}$$

where:

$R_{I,Cap}$ = Internal resistance [Ohm]

$R_{I,ref}$ = Reference for internal resistance with a numeric value of 0,015 [Ohm]

$V_{max,Cap}$ = Maximum voltage as defined in accordance with subpoint (b) above [V]

$V_{min,Cap}$ = Minimum voltage as defined in accordance with subpoint (c) above [V]

V_{ref} = Reference for maximum voltage with a numeric value of 2,7 [V]

C_{ref} = Reference for capacitance with a numeric value of 3 000 [F]

C_{Cap} = Capacitance as defined in accordance with subpoint (a) above [F]

(e) The values for both, maximum charging and maximum discharging current, shall be calculated by multiplying the value of the capacitance in F as defined in accordance with subpoint (a) above by a factor of 5,0 [A/F]. Absolute values for both, maximum charging and maximum discharging current, shall be used as final values.

Appendix 11

(reserved)

Appendix 12

Conformity of the certified CO_2 emissions and fuel consumption related properties

1. Electric machine systems or IEPCs

1.1 Every electric machine system or IEPC shall be so manufactured as to conform to the approved type with regard to the description as given in the certificate and its annexes. The conformity of the certified CO_2 emissions and fuel consumption related properties procedures shall comply with those set out in Article 31 of Regulation (EU) 2018/858.

1.2 Conformity of the certified CO_2 emissions and fuel consumption related properties shall be checked on the basis of the description in the certificates and information packages annexed thereto as set out in Appendices 2 and 3 of this Annex.

1.3 Conformity of the certified CO_2 emissions and fuel consumption related properties shall be assessed in accordance with the specific conditions laid down in this paragraph.

1.4 The component manufacturer shall test annually at least the number of units indicated in Table 1 based on the total annual production number of electric machine systems or IEPCs produced by the component manufacturer. For the purpose of establishing the annual production numbers, only electric machine systems or IEPCs which fall under the requirements of this Regulation and for which no standard values were used shall be considered.

1.5 For total annual production volumes up to 4,000, the choice of the family for which the tests shall be performed shall be agreed between the component manufacturer and the approval authority.

1.6 For total annual production volumes above 4,000, the family with the highest production volume shall always be tested. The component manufacturer shall justify to the approval authority the number of tests which has been performed and the choice of the family. The remaining families for which the tests are to be performed shall be agreed between the manufacturer and the approval authority.

Table 1

Sample size conformity testing

Total annual production of either electric machine systems or IEPCs	Annual number of tests	Alternatively
0 – 1 000	n.a.	1 test every 3 years (*)
1 001 – 2 000	n.a.	1 test every 2 years (*)
2 001 – 4 000	1	n.a.
4 001 – 10 000	2	n.a.
10 001 – 20 000	3	n.a.
20 001 – 30 000	4	n.a.
30 001 – 40 000	5	n.a.
40 001 – 50 000	6	n.a.
> 50 000	7	n.a.

(*) The CoP test shall be performed in the first year

1.7. For the purpose of the conformity of the certified CO_2 emissions and fuel consumption related properties testing the approval authority shall identify together with the component manufacturer the electric machine system or IEPC type(s) to be tested. The approval authority shall ensure that the selected electric machine system or IEPC type(s) is manufactured to the same standards as for serial production.

1.8 If the result of a test performed in accordance with point 1.9 is higher than the one specified in point 1.9.4, 3 additional units from the same family shall be tested. If any of them fails, Article 23 shall apply.

1.9 Production conformity testing of electric machine system or IEPC

1.9.1 Boundaries conditions

All boundary conditions as specified in this Annex for the certification testing shall apply unless stated otherwise in this paragraph.

The cooling power shall be within the limits as specified in this Annex for the certification testing.

The measurement shall only be performed for one of the voltage levels indicated in paragraph 4.1.3 of this Annex. The voltage level for testing shall be chosen by the component manufacturer.

The measurement equipment specifications defined in accordance with paragraph 3.1 of this Annex do not need to be fulfilled for CoP testing.

1.9.2 Test run

Two different setpoints shall be measured. After the measurement at the first setpoint is completed, the system may be cooled down in accordance with the component manufacturer's recommendations by running at a particular setpoint defined by the component manufacturer.

For setpoint 1 the test of overload characteristics shall be performed in accordance with paragraph 4.2.5 of this Annex.

For setpoint 2 the test of maximum 30 minutes continuous torque shall be performed in accordance with paragraph 4.2.4 of this Annex.

1.9.3 Post-processing of results

All values of mechanical and electrical power determined in accordance with paragraphs 4.2.5.3 and 4.2.4.3 shall be corrected for uncertainty deviation of CoP measurement equipment in accordance with the following provisions:

(a) The difference in measurement equipment uncertainty in % between component type approval and CoP testing in accordance with this Appendix shall be calculated for the measurement systems used for rotational speed, torque, current and voltage.

(b) The difference in uncertainty in % referred to in subpoint (a) above shall be calculated for both, the analyser reading and the maximum calibration value defined in accordance with paragraph 3.1 of this Annex.

(c) The total difference in uncertainty for electrical power shall be calculated based on the following equation:

$$\Delta u_{P,el,CoP} = \sqrt{\Delta u^2_{U,max\ calib} + \Delta u^2_{U,value} + \Delta u^2_{I,max\ calib} + \Delta u^2_{I,value}}$$

where:

$\Delta u_{U,max\ calib}$ difference in uncertainty for maximum calibration value for voltage measurement [%]

$\Delta u_{U,value}$ difference in uncertainty for analyser reading for voltage measurement [%]

$\Delta u_{I,max\ calib}$ difference in uncertainty for maximum calibration value for current measurement [%]

$\Delta u_{I,value}$ difference in uncertainty for analyser reading for current measurement [%]

(d) The total difference in uncertainty for mechanical power shall be calculated based on the following equation:

$$\Delta u_{P,mech,CoP} = \sqrt{\Delta u^2_{T,max\ calib} + \Delta u^2_{T,value} + \Delta u^2_{n,max\ calib} + \Delta u^2_{n,value}}$$

where:

$\Delta u_{T,max\ calib}$ difference in uncertainty for maximum calibration value for torque measurement [%]

$\Delta u_{T,value}$ difference in uncertainty for analyser reading for torque measurement [%]

$\Delta u_{n,max\ calib}$ difference in uncertainty for maximum calibration value for rotational speed measurement [%]

$\Delta u_{n,value}$ difference in uncertainty for analyser reading for rotational speed measurement [%]

(e) All measured values of mechanical power shall be corrected based on the following equation:

$$P^*_{mech} = P_{mech,meas}\ (1 - \Delta u_{P,mech,CoP})$$

where:

$P_{mech,meas}$ measured value of mechanical power

$\Delta u_{P,mech,CoP}$ total difference in uncertainty for mechanical power in accordance with subpoint (d) above

(f) All measured values of electrical power shall be corrected based on the following equation:

$$P^*_{el} = P_{el,meas}\ (1 + \Delta u_{P,el,CoP})$$

where:

$P_{el,meas}$ measured value of electrical power

$\Delta u_{P,el,CoP}$ total difference in uncertainty for electrical power in accordance with subpoint (c) above

1.9.4 Evaluation of results

From the values for each of the two different setpoints determined in accordance with paragraphs 1.9.2 and 1.9.3, the efficiency figures shall be determined dividing the corrected mechanical power P^*_{mech} by the corrected electrical power P^*_{el}.

The total efficiency during conformity of the certified CO_2 emissions and fuel consumption related properties testing $\eta_{A,CoP}$ shall be calculated by the arithmetic mean value of the two efficiency figures.

The conformity of the certified CO_2 emissions and fuel consumption related properties test is passed when the difference between $\eta_{A,CoP}$ and $\eta_{A,TA}$ is lower than 3 % of the type approved efficiency $\eta_{A,TA}$. In the case of an IEPC with either a gearbox or a differential included, the limit for passing the CoP test is raised to 4 % instead of 3. In the case of an IEPC with both a gearbox and a differential included, the limit for passing the CoP test is raised to 5 % instead of 3.

The type approved efficiency $\eta_{A,TA}$ shall be calculated by the arithmetic mean value of the two efficiency figures determined in accordance with paragraphs 4.3.5 and 4.3.6 and documented in the information document during component certification.

2. IHPCs Type 1

2.1 Every IHPC shall be so manufactured as to conform to the approved type with regard to the description as given in the certificate and its annexes. The conformity of the certified CO_2 emissions and fuel consumption related properties procedures shall comply with those set out in Article 31 of Regulation (EU) 2018/858.

2.2 Conformity of the certified CO_2 emissions and fuel consumption related properties shall be checked on the basis of the description in the certificates and information packages annexed thereto as set out in Appendix 4 of this Annex.

2.3 Conformity of the certified CO_2 emissions and fuel consumption related properties shall be assessed in accordance with the specific conditions laid down in paragraph 1 of this Appendix where the provisions defined for IEPC in the respective paragraphs shall be applied unless stated otherwise.

2.4 Notwithstanding the provisions in paragraph 2.3 of this Appendix, the following provisions shall be applied:

(a) Conformity of the certified CO_2 emissions and fuel consumption related properties shall be checked only for individual types of IHPC Type 1 instead of families since definition of families is not allowed for IHPCs Type 1 in accordance with paragraph 4.4 of this Annex.

(b) The allocation of the number of tests to be performed to a individual type shall be agreed between the manufacturer and the approval authority.

(c) All references to families in the respective paragraphs shall be interpreted as references to individual types.

(d) The type approved efficiency $\eta_{A,TA}$ shall be calculated by the arithmetic mean value of the two efficiency figures determined in accordance with paragraphs 4.3.5 and 4.3.6 and recorded in the information document during component certification. For these two efficiency figures the post-processing steps described in paragraph 4.4.2.3 of this Annex shall not be performed.

3. Battery systems or representative battery subsystems

3.1 Every battery system or representative battery subsystem shall be so manufactured as to conform to the approved type with regard to the description as given in the certificate and its annexes. The conformity of the certified CO_2 emissions and fuel consumption related properties procedures shall comply with those set out in Article 31 of Regulation (EU) 2018/858.

3.2 Conformity of the certified CO_2 emissions and fuel consumption related properties shall be checked on the basis of the description in the certificates and information packages annexed thereto as set out in Appendix 5 of this Annex.

3.3 Conformity of the certified CO_2 emissions and fuel consumption related properties shall be assessed in accordance with the specific conditions laid down in this paragraph.

3.4 The component manufacturer shall test annually at least the number of units indicated in Table 2 based on the total annual production number of battery systems or representative battery subsystems produced by the component manufacturer. For the purpose of establishing the annual production numbers, only battery systems or representative battery subsystems which fall under the requirements of this Regulation and for which no standard values were used shall be considered.

Table 2

Sample size conformity testing

Total annual production of battery systems or representative battery subsystems	Annual number of tests	Alternatively
0 – 3 000	n.a.	1 test every 3 years (*)
3 001 – 6 000	n.a.	1 test every 2 years (*)
6 001 – 12 000	1	n.a.
12 001 – 30 000	2	n.a.
30 001 – 60 000	3	n.a.
60 001 – 90 000	4	n.a.
90 001 – 120 000	5	n.a.
120 001 – 150 000	6	n.a.
> 150 000	7	n.a.

(*) The CoP test shall be performed in the first year

3.5. For the purpose of the conformity of the certified CO_2 emissions and fuel consumption related properties testing the approval authority shall identify together with the component manufacturer the type(s) of battery system or representative battery subsystem to be tested. The approval authority shall ensure that the selected type(s) of battery system or representative battery subsystem is manufactured to the same standards as for serial production.

3.6 If the result of a test performed in accordance with point 3.7 is higher than the one specified in point 3.7.4., 3 additional units from the same type shall be tested. If any of them fails, Article 23 shall apply.

3.7 Production conformity testing of battery system or representative battery subsystem

3.7.1 Boundaries conditions

All boundary conditions as specified in this Annex for the certification testing shall apply.

3.7.2 Test run

Two different tests shall be performed.

For test 1 the test procedure for rated capacity shall be performed in accordance with paragraph 5.4.1 of this Annex.

For test 2 the following procedure shall be performed:

(a) Test 2 shall be performed after test 1.

(b) After the battery UUT was fully charged in accordance with the specifications of the component manufacturer and thermal equilibration in accordance with paragraph 5.1.1 was reached, a standard cycle in accordance with paragraph 5.3 shall be performed.

(c) Within a period of 1 to 3 hours after the end of the standard cycle, the actual test run shall be started. Otherwise, the procedure in the preceding subpoint (b) shall be repeated.

(d) In order to reach the required SOC levels for testing as defined in subpoints (e) and (f) from the initial condition of the battery UUT, it shall be discharged at a constant current rate of 3C for HPBS and of 1C for HEBS.

(e) For HPBS the actual test run shall consist of a 20-second discharge at 80 % SOC with the maximum discharge current I_{dischg_max} as documented during component type approval and of a 20-second charge at 20 % SOC with the maximum charge current I_{chg_max} as documented during component type approval.

(f) For HEBS the actual test run shall consist of a 120-second discharge at 90 % SOC with the maximum discharge current I_{dischg_max} as documented during component type approval and of a 120-second charge at 20 % SOC with the maximum charge current I_{chg_max} as documented during component type approval.

(g) During the actual test run described in subpoints (e) and (f) above, the discharging and charging currents shall be recorded over the respective durations specified.

3.7.3 Post-processing of results

For HPBS the discharging current at 80 % SOC and the charging current at 20 % SOC shall be averaged over the measurement period of 20 seconds.

For HEBS the discharging current at 90 % SOC and the charging current at 20 % SOC shall be averaged over the measurement period of 120 seconds.

Absolute numbers shall be used for both average values, discharging and charging current.

3.7.4 Evaluation of results

The conformity of the certified CO_2 emissions and fuel consumption related properties test is passed when all of the following criteria are fulfilled:

(a) $C_{CoP} \geq 0{,}95\ C_{TA}$

where:

C_{CoP} Rated capacity determined in accordance with paragraph 3.7.2 [Ah]

C_{TA} Rated capacity determined during component type approval [Ah]

(b) $(\eta_{BAT,CoP} - \eta_{BAT,TA}) \leq 3\%$

where:

$\eta_{BAT,CoP}$ Round trip efficiency determined in accordance with paragraph 3.7.2 [-]

$\eta_{BAT,TA}$ Round trip efficiency determined during component type approval [-]

(c) $I_{dischg_max,CoP} \geq I_{dischg_max,TA}$

where:

$I_{dischg_max,CoP}$ Maximum discharge current determined in accordance with paragraph 3.7.2 (at 80 % SOC for HPBS and at 90 % SOC for HEBS) [A]

$I_{dischg_max,TA}$ Maximum discharge current determined during component type approval (at 80 % SOC for HPBS and at 90 % SOC for HEBS) [A]

(d) $I_{chg_max,CoP} \geq I_{chg_max,TA}$

where:

$I_{chg_max,CoP}$ Maximum charge current determined in accordance with paragraph 3.7.2 (at 20 % SOC) [A]

$I_{chg_max,TA}$ Maximum charge current determined during component type approval (at 20 % SOC) [A]

4. Capacitor systems

4.1 Every capacitor systems shall be so manufactured as to conform to the approved type with regard to the description as given in the certificate and its annexes. The conformity of the certified CO_2 emissions and fuel consumption related properties procedures shall comply with those set out in Article 31 of Regulation (EU) 2018/858.

4.2 Conformity of the certified CO_2 emissions and fuel consumption related properties shall be checked on the basis of the description in the certificates and information packages annexed thereto as set out in Appendix 6 of this Annex.

4.3 Conformity of the certified CO_2 emissions and fuel consumption related properties shall be assessed in accordance with the specific conditions laid down in this paragraph.

4.4 The component manufacturer shall test annually at least the number of units indicated in Table 3 based on the total annual production number of capacitor systems produced by the component manufacturer. For the purpose of establishing the annual production numbers, only capacitor systems which fall under the requirements of this Regulation and for which no standard values were used shall be considered.

Table 3

Sample size conformity testing

Total annual production of capacitor systems	Annual number of tests	Alternatively
0 – 3 000	n.a.	1 test every 3 years (*)
3 001 – 6 000	n.a.	1 test every 2 years (*)
6 001 – 12 000	1	n.a.
12 001 – 30 000	2	n.a.
30 001 – 60 000	3	n.a.
60 001 – 90 000	4	n.a.
90 001 – 120 000	5	n.a.
120 001 – 150 000	6	n.a.
> 150 000	7	n.a.

(*) The CoP test shall be performed in the first year

4.5. For the purpose of the conformity of the certified CO_2 emissions and fuel consumption related properties testing the approval authority shall identify together with the component manufacturer the type(s) of capacitor systems to be tested. The approval authority shall ensure that the selected type(s) of capacitor systems is manufactured to the same standards as for serial production.

4.6 If the result of a test performed in accordance with point 4.7 is higher than the one specified in point 4.7.4., 3 additional units from the same type shall be tested. If any of them fails, Article 23 shall apply.

4.7 Production conformity testing of capacitor systems

4.7.1 Boundaries conditions

All boundary conditions as specified in this Annex for the certification testing shall apply.

4.7.2 Test run

The test procedure shall be performed in accordance with paragraph 6.3 of this Annex.

4.7.3 Post-processing of results

The post-processing of results shall be performed in accordance with paragraph 6.4 of this Annex.

4.7.4 Evaluation of results

The conformity of the certified CO_2 emissions and fuel consumption related properties test is passed when all of the following criteria are fulfilled:

(a) $(C_{CoP} / C_{TA}) - 1 < \pm 3\,\%$

where:

C_{CoP} Capacitance determined in accordance with paragraph 4.7.2 [F]

C_{TA} Capacitance determined during component type approval [F]

(b) $(R_{CoP} / R_{TA}) - 1 < \pm 3\,\%$

where:

R_{CoP} Internal resistance determined in accordance with paragraph 4.7.2 [Ohm]

R_{TA} Internal resistance determined during component type approval [Ohm]

Appendix 13

Family concept

1. Electric machine systems and IEPCs

1.1. General

A family of electric machine systems or IEPCs is characterised by design and performance parameters. These shall be common to all members within the family. The component manufacturer may decide which electric machine systems or IEPCs belong to a family, as long as the membership criteria listed in this Appendix are respected. The related family shall be approved by the Approval Authority. The component manufacturer shall provide to the Approval Authority the appropriate information relating to the members of the family.

1.2. Special cases

In some cases there may be interaction between parameters. This shall be taken into consideration to ensure that electric machine systems or IEPCs with similar characteristics are included within the same family. These cases shall be identified by the component manufacturer and notified to the Approval Authority. It shall then be taken into account as a criterion for creating a new family of electric machine systems or IEPCs.

In the case of devices or features, which are not listed in paragraph 1.4 and which have a strong influence on the level of performance and/or the electric power consumption, the respective devices or features shall be identified by the component manufacturer on the basis of good engineering practice, and shall be notified to the Approval Authority. It shall then be taken into account as a criterion for creating a new family of electric machine systems or IEPCs.

1.3. Family concept

The family concept defines criteria and parameters enabling the component manufacturer to group electric machine systems or IEPCs into families with similar or equal data relevant for CO_2-emissions or energy consumption.

1.4. Special provisions regarding representativeness

The Approval Authority may conclude that the performance parameters and the electric power consumption of the family of electric machine systems or IEPCs can best be characterised by additional testing. In this case, the component manufacturer shall submit the appropriate information to determine the electric machine system or IEPC within the family likely to best represent the family. The Approval Authority may based on this information also conclude that it is required for the component manufacturer to create a new family of electric machine systems or IEPCs consisting of less members in order to be more representative.

If members within a family incorporate other features which may be considered to affect the performance parameters and/or the electric power consumption, these features shall also be identified and taken into account in the selection of the parent.

1.5. Parameters defining a family of electric machine systems or IEPCs

In addition to the parameters listed below, the component manufacturer may introduce additional criteria allowing the definition of families of more restricted size. These parameters are not necessarily parameters that have an influence on the level of performance and/or the electric power consumption.

1.5.1. The following criteria shall in principal be the same to all members within a family of electric machine systems or IEPCs:

(a) Electric Machine: Rotor, Stator, Windings in dimensions, design, material, etc.

(b) Inverter: Power Modules, Conductive bars in dimensions, design, material, etc.

(c) Internal cooling system: layout, dimension and material of cooling fins, ribs, and pins

(d) Internal fans: layout and dimension

(e) Inverter Software: Basic calibration which consists of temperature models (electric machine and inverter), derating limits, torque path (transfer of command torque to phase current), flux calibration, current control, voltage modulation, sensor specific calibration (only allowed if sensor is changed)

(f) Gear related parameters (only for IEPCs): in accordance with definitions set out in Annex VI.

Changes to the components as mentioned at (a) through (f) are only acceptable as long as sound engineering rationale can be provided to prove that the respective change does not negatively affect the performance parameters and/or the electric power consumption.

1.5.2. The following criteria shall be common to all members within a family of electric machine systems or IEPCs. The application of a specific range to the parameters listed below is permitted after approval of the Approval Authority:

(a) Output shaft interface: any changes allowed;

(b) End shields:

For the internal design it must be checked if passive cooling elements or air flow at the inner side of the end shields are affected by changes.

For the external design screws, suspension points, flange design have no influence on performance if no passive cooling elements are removed or changed;

(c) Bearings: Changes allowed as long as number and type of bearings remain the same;

(d) Shaft: Changes allowed as long as active or passive cooling is not affected;

(e) High voltage connection: Changes regarding position or type of the high voltage connection allowed;

(f) Housing: Changes of the housing or number, type and position of screws or mounting points allowed as long as no passive cooling elements are removed or changed;

(g) Sensor: Changes allowed, if certified performance is not changed;

(h) Inverter housing: Changes of the housing or number, type and position of screws or mounting points allowed as long as no passive cooling elements are removed or changed or the inner layout of the electric active parts is not changed;

(i) Inverter high voltage connection: Changes regarding position or type of the high voltage connection allowed as long as the layout or position of the active parts or cooling elements (active/passive) is not changed;

(j) Inverter software: All software changes which do not change the basic calibration of the electric machine (definition see above) are allowed. Notwithstanding the previous provisions, limitations of output power are allowed for members within a family of electric machine systems or IEPCs;

(k) Inverter sensor: Changes allowed, if certified performance is not changed;

(l) Oil viscosity: for all oils that are specified for the factory fill, the kinematic viscosity at the same temperature shall be less or equal to 110 % of the kinematic viscosity of the oil used for component certification as documented in the respective information document (within the specified tolerance band for KV100);

(m) Maximum torque curve

The torque values at each rotational speed of the maximum torque curve of the parent determined in accordance with paragraph 4.2.2.4 of this Annex shall be equal or higher than for all other members within the same family at the same rotational speed over the whole rotational speed range. Torque values of other members within the same family within a tolerance of +40 Nm or +4 %, whatever is larger, above the maximum torque of the parent at a specific rotational speed are considered as equal;

(n) Minimum torque curve

The torque values at each rotational speed of the minimum torque curve of the parent determined in accordance with paragraph 4.2.2.4 of this Annex shall be equal or lower than for all other members within the same family at the same rotational speed over the whole rotational speed range. Torque values of other members within the same family within a tolerance of -40 Nm or -4 %, whatever is larger, below the minimum torque of the parent at a specific rotational speed are considered as equal;

(o) Minimum number of points in the EPMC map:

All members within the same family shall have a minimum coverage of 60 % of the points (rounded up to the next whole number) of the EPMC map (i.e. where the EPMC map of the parent is applied to other members) located within the boundaries of their respective maximum and minimum torque curves determined in accordance with paragraph 4.2.2.4 of this Annex.

1.6. Choice of the parent

The parent of one family of electric machine systems or IEPCs shall be member with the highest overall maximum torque determined in accordance with paragraph 4.2.2 of this Annex.

Appendix 14

Markings and numbering

1. Markings

In the case of an electric powertrain component being type approved in accordance with this Annex, the component shall bear:

1.1. The manufacturer's name or trade mark

1.2. The make and identifying type indication as recorded in the information referred to in paragraph 0.2 and 0.3 of Appendixes 2 to 6 of this Annex

1.3. The certification mark (if applicable) as a rectangle surrounding the lower-case letter "e" followed by the distinguishing number of the Member State which has granted the certificate:

1 for Germany;
2 for France;
3 for Italy;
4 for the Netherlands;
5 for Sweden;
6 for Belgium;
7 for Hungary;
8 for Czechia;
9 for Spain;
12 for Austria;
13 for Luxembourg;
17 for Finland;
18 for Denmark;
19 for Romania;
20 for Poland;
21 for Portugal;
23 for Greece;
24 for Ireland;
25 for Croatia;
26 for Slovenia;
27 for Slovakia;
29 for Estonia;
32 for Latvia;
34 for Bulgaria;
36 for Lithuania;
49 for Cyprus;
50 for Malta

1.4. The certification mark shall also include in the vicinity of the rectangle the "base certification number" as specified for Section 4 of the type-approval number set out in Annex IV to Regulation (EU) 2020/683 preceded by the two figures indicating the sequence number assigned to the latest technical amendment to this Regulation and by an alphabetical character indicating the part for which the certificate has been granted:

For this Regulation, the sequence number shall be 02.

For this Regulation, the alphabetical character shall be the one laid down in Table 1.

Table 1

M	electric machine system (EMS)
I	integrated electric powertrain component (IEPC)
H	integrated HEV powertrain component (IHPC) Type 1
B	battery system
A	capacitor system

1.4.1. Example and dimensions of the certification mark

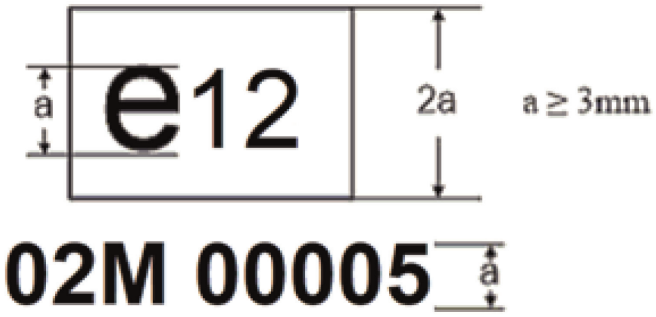

The above certification mark affixed to an electric powertrain component shows that the type concerned has been approved in Austria (e12), pursuant to this Regulation. The first two digits (02) are indicating the sequence number assigned to the latest technical amendment to this Regulation. The following letter indicates that the certificate was granted for an electric machine system (M). The last five digits (00005) are those allocated by the type-approval authority to the electric machine system as the base certification number.

1.5 Upon request of the applicant for a certificate and after prior agreement with the type-approval authority other type sizes than indicated in 1.4.1 may be used. Those other type sizes shall remain clearly legible.

1.6 The markings, labels, plates or stickers must be durable for the useful life of the electric powertrain component and must be clearly legible and indelible. The manufacturer shall ensure that the markings, labels, plates or sticker cannot be removed without destroying or defacing them.

1.7 The certification mark shall be visible when the electric powertrain component is installed on the vehicle and shall be affixed to a part necessary for normal operation and not normally requiring replacement during component life.

2. Numbering:

2.1. Certification number for an electric powertrain component shall comprise the following:

eX*YYYY/YYYY*ZZZZ/ZZZZ*X*00000*00

section 1	section 2	section 3	Additional letter to section 3	section 4	section 5
Indication of country issuing the certificate	HDV CO_2 determination Regulation “2017/2400”	Latest amending Regulation (ZZZZ/ZZZZ)	See Table 1 of this appendix	Base certification number 00000	Extension 00

Appendix 15

Input parameters for the simulation tool

Introduction

This Appendix describes the list of parameters to be provided by the component manufacturer as input to the simulation tool. The applicable XML schema as well as example data are available at the dedicated electronic distribution platform.

Definitions

(1) "parameter ID": Unique identifier as used in the simulation tool for a specific input parameter or set of input data

(2) "type": Data type of the parameter

string..... sequence of characters in ISO8859-1 encoding

token..... sequence of characters in ISO8859-1 encoding, no leading/trailing whitespace

date..... date and time in UTC time in the format: YYYY-MM-DD*T*HH:MM:SS*Z* with italic letters denoting *fixed characters* e.g. "2002-05-30*T*09:30:10*Z*"

integer..... value with an integral data type, no leading zeros, e.g. "1800"

double, X..... fractional number with exactly X digits after the decimal sign ('.') and no leading zeros e.g. for "double, 2": "2345,67"; for "double, 4": "45,6780"

(3) "unit" … physical unit of the parameter

Set of input parameters for Electric machine system

Table 1

Input parameters "Electric machine system/General"

Parameter name	Parameter ID	Type	Unit	Description/Reference
Manufacturer	P450	token	[-]	
Model	P451	token	[-]	
CertificationNumber	P452	token	[-]	
Date	P453	dateTime	[-]	Date and time when the component-hash is created
AppVersion	P454	token	[-]	Manufacturer specific input regarding the tools used for evaluation and handling of measured component data
ElectricMachineType	P455	string	[-]	Determined in accordance with point 21 of paragraph 2 of this Annex. Allowed values: "ASM", "ESM", "PSM", "RM"
CertificationMethod	P456	string	[-]	Allowed values: "Measurement", "Standard values"

Parameter name	Parameter ID	Type	Unit	Description/Reference
R85RatedPower	P457	integer	[W]	Determined in accordance with paragraph 1.9 of Annex 2 to UN Regulation No. 85 Rev. 1
RotationalInertia	P458	double, 2	[kgm^2]	Determined in accordance with point 8 of Appendix 8 of this Annex.
DcDcConverterIncluded	P465	boolean	[-]	Set to "true" where a DC/DC converter is part of the electric machine system, in accordance with paragraph 4.1 of this Annex
IHPCType	P466	string	[-]	Allowed values: "None", "IHPC Type 1"

Table 2

Input parameters "Electric machine system/VoltageLevels" for each voltage level measured

Parameter name	Parameter ID	Type	Unit	Description/Reference
VoltageLevel	P467	integer	[V]	Where the parameter "CertificationMethod" is "Standard values", no input needs to be provided.
ContinuousTorque	P459	double, 2	[Nm]	
TestSpeedContinuousTorque	P460	double, 2	[1/min]	
OverloadTorque	P461	double, 2	[Nm]	
TestSpeedOverloadTorque	P462	double, 2	[1/min]	
OverloadDuration	P463	double, 2	[s]	

Table 3

Input parameters "Electric machine system/MaxMinTorque" for each operating point and for each voltage level measured

Parameter name	Parameter ID	Type	Unit	Description/Reference
OutputShaftSpeed	P468	double, 2	[1/min]	
MaxTorque	P469	double, 2	[Nm]	
MinTorque	P470	double, 2	[Nm]	

Table 4

Input parameters "Electric machine system/DragTorque" for each operating point

Parameter name	Parameter ID	Type	Unit	Description/Reference
OutputShaftSpeed	P471	double, 2	[1/min]	
DragTorque	P472	double, 2	[Nm]	

Table 5

Input parameters "Electric machine system/ElectricPowerMap" for each operating point and for each voltage level measured.

In the case of an IHPC Type 1 (in accordance with the definition set out in sub point (42) of point 2 of this Annex), for each operating point, for each voltage level measured and for each forward gear.

Parameter name	Parameter ID	Type	Unit	Description/Reference
OutputShaftSpeed	P473	double, 2	[1/min]	
Torque	P474	double, 2	[Nm]	
ElectricPower	P475	double, 2	[W]	

Table 6

Input parameters "Electric machine system/Conditioning" for each cooling circuit with connection to an external heat exchanger

Where the parameter "CertificationMethod" is "Standard values", no input needs to be provided.

Parameter name	Parameter ID	Type	Unit	Description/Reference
CoolantTempInlet	P476	integer	[°C]	Determined in accordance with paragraphs 4.1.5.1 and 4.3.6 of this Annex.
CoolingPower	P477	integer	[W]	Determined in accordance with paragraphs 4.1.5.1 and 4.3.6 of this Annex.

Set of input parameters for IEPC

Table 1

Input parameters "IEPC/General"

Parameter name	Parameter ID	Type	Unit	Description/Reference
Manufacturer	P478	token	[-]	

Parameter name	Parameter ID	Type	Unit	Description/Reference
Model	P479	token	[-]	
CertificationNumber	P480	token	[-]	
Date	P481	dateTime	[-]	Date and time when the component-hash is created
AppVersion	P482	token	[-]	Manufacturer specific input regarding the tools used for evaluation and handling of measured component data
ElectricMachineType	P483	string	[-]	Determined in accordance with point 21 of paragraph 2 of this Annex. Allowed values: “ASM”, “ESM”, “PSM”, “RM”
CertificationMethod	P484	string	[-]	Allowed values: “Measured for complete component”, “Measured for EM and standard values for other components”, “Standard values for all components”
R85RatedPower	P485	integer	[W]	Determined in accordance with paragraph 1.9 of Annex 2 to UN Regulation No. 85
RotationalInertia	P486	double, 2	[kgm^2]	Determined in accordance with point 8 of Appendix 8 of this Annex.
DifferentialIncluded	P493	boolean	[-]	Set to “true” in the case a differential is part of the IEPC
DesignTypeWheelMotor	P494	boolean	[-]	Set to “true” in the case of an IEPC design type wheel motor
NrOf DesignTypeWheelMotor-Measured	P495	integer	[-]	Input only relevant in the case of an IEPC design type wheel motor, in accordance with paragraph 4.1.1.2 of this Annex. Allowed values: “1”, “2”

Table 2

Input parameters "IEPC/Gears" for each forward gear

Parameter name	Parameter ID	Type	Unit	Description/Reference
GearNumber	P496	integer	[-]	
Ratio	P497	double, 3	[-]	Ratio of electric machine rotor speed over IEPC output shaft speed
MaxOutputShaftTorque	P498	integer	[Nm]	optional
MaxOutputShaftSpeed	P499	integer	[1/min]	optional

Table 3

Input parameters "IEPC/VoltageLevels" for each voltage level measured

Parameter name	Parameter ID	Type	Unit	Description/Reference
VoltageLevel	P500	integer	[V]	Where the parameter "Certification-Method" is "Standard values for all components", no input needs to be provided.
ContinuousTorque	P487	double, 2	[Nm]	
TestSpeedContinuousTorque	P488	double, 2	[1/min]	
OverloadTorque	P489	double, 2	[Nm]	
TestSpeedOverloadTorque	P490	double, 2	[1/min]	
OverloadDuration	P491	double, 2	[s]	

Table 4

Input parameters "IEPC/MaxMinTorque" for each operating point and for each voltage level measured

Parameter name	Parameter ID	Type	Unit	Description/Reference
OutputShaftSpeed	P501	double, 2	[1/min]	
MaxTorque	P502	double, 2	[Nm]	
MinTorque	P503	double, 2	[Nm]	

Table 5

Input parameters "IEPC/DragTorque" for each operating point and for each forward gear measured (optional gear dependent measurement in accordance with paragraph 4.2.3)

Parameter name	Parameter ID	Type	Unit	Description/Reference
OutputShaftSpeed	P504	double, 2	[1/min]	
DragTorque	P505	double, 2	[Nm]	

Table 6

Input parameters "IEPC/ElectricPowerMap" for each operating point, for each voltage level measured and for each forward gear

Parameter name	Parameter ID	Type	Unit	Description/Reference
OutputShaftSpeed	P506	double, 2	[1/min]	
Torque	P507	double, 2	[Nm]	
ElectricPower	P508	double, 2	[W]	

Table 7

Input parameters "IEPC/Conditioning" for each cooling circuit with connection to an external heat exchanger

Where the parameter "CertificationMethod" is "Standard values for all components", no input needs to be provided.

Parameter name	Parameter ID	Type	Unit	Description/Reference
CoolantTempInlet	P509	integer	[°C]	Determined in accordance with paragraphs 4.1.5.1 and 4.3.6 of this Annex.
CoolingPower	P510	integer	[W]	Determined in accordance with paragraphs 4.1.5.1 and 4.3.6 of this Annex.

Set of input parameters for Battery system

Table 1

Input parameters "Battery system/General"

Parameter name	Parameter ID	Type	Unit	Description/Reference
Manufacturer	P511	token	[-]	
Model	P512	token	[-]	

Parameter name	Parameter ID	Type	Unit	Description/Reference
CertificationNumber	P513	token	[-]	
Date	P514	dateTime	[-]	Date and time when the component-hash is created
AppVersion	P515	token	[-]	Manufacturer specific input regarding the tools used for evaluation and handling of measured component data
CertificationMethod	P517	string	[-]	Allowed values: "Measured", "Standard values"
BatteryType	P518	string	[-]	Allowed values: "HPBS", "HEBS"
RatedCapacity	P519	double, 2	[Ah]	
ConnectorsSubsystemsIncluded	P520	boolean	[-]	Only relevant if representative battery sub-system is tested: Set to "true" if representative cable harness for connecting battery sub-systems was included in testing. Always set to "true" if complete battery system was tested.
JunctionboxIncluded	P511	boolean	[-]	Only relevant if representative battery sub-system is tested: Set to "true" if representative junction box with shut-off device and fuses was included in testing. Always set to "true" if complete battery system was tested.
TestingTemperature	P521	integer	[°C]	Determined in accordance with paragraph 5.1.4 of this Annex. Where the parameter "Certification-Method" is "Standard values", no input needs to be provided.

Table 2

Input parameters "Battery system/OCV" for each SOC level measured

Parameter name	Parameter ID	Type	Unit	Description/Reference
SOC	P522	integer	[%]	
OCV	P523	double, 2	[V]	

Table 3

Input parameters "Battery system/DCIR" for each SOC level measured

Parameter name	Parameter ID	Type	Unit	Description/Reference
SOC	P524	integer	[%]	Where the parameter "Certification-Method" is "Standard values", the same DCIR values shall be provided for two different SOC values of 0 % and 100 %.
DCIR R_{I2}	P525	double, 2	[mOhm]	Where the parameter "Certification-Method" is "Standard values", the DCIR value determined in accordance with subpoint (1)(d) of Appendix 10 shall be provided.
DCIR R_{I10}	P526	double, 2	[mOhm]	Where the parameter "Certification-Method" is "Standard values", the DCIR value determined in accordance with subpoint (1)(d) of Appendix 10 shall be provided.
DCIR R_{I20}	P527	double, 2	[mOhm]	Where the parameter "Certification-Method" is "Standard values", the DCIR value determined in accordance with subpoint (1)(d) of Appendix 10 shall be provided.
DCIR R_{I120}	P528	double, 2	[mOhm]	Optional, only required for batteries of type HEBS. In the event the parameter "Certification-Method" is "Standard values", the DCIR value determined in accordance with subpoint (1)(d) of Appendix 10 shall be provided.

Table 4

Input parameters "Battery system/Current limits" for each SOC level measured

Parameter name	Parameter ID	Type	Unit	Description/Reference
SOC	P529	integer	[%]	Where the parameter "Certification-Method" is "Standard values", the same values for MaxChargingCurrent as well as MaxDischargingCurrent shall be provided for two different SOC values of 0 % and 100 %.
MaxChargingCurrent	P530	double, 2	[A]	
MaxDischargingCurrent	P531	double, 2	[A]	

Set of input parameters for Capacitor system

Table 1

Input parameters "Capacitor system/General"

Parameter name	Parameter ID	Type	Unit	Description/Reference
Manufacturer	P532	token	[-]	
Model	P533	token	[-]	
CertificationNumber	P534	token	[-]	
Date	P535	dateTime	[-]	Date and time when the component-hash is created
AppVersion	P536	token	[-]	Manufacturer specific input regarding the tools used for evaluation and handling of measured component data
CertificationMethod	P538	string	[-]	Allowed values: "Measurement", "Standard values"
Capacitance	P539	double, 2	[F]	
InternalResistance	P540	double, 2	[Ohm]	
MinVoltage	P541	double, 2	[V]	
MaxVoltage	P542	double, 2	[V]	
MaxChargingCurrent	P543	double, 2	[A]	
MaxDischargingCurrent	P544	double, 2	[A]	
TestingTemperature	P532	integer	[°C]	Determined in accordance with paragraph 6.1.3 of this Annex. Where the parameter "Certification-Method" is "Standard values", no input needs to be provided.

(*) determined in accordance with points 4.3.5 and 4.3.6 of this Annex

(**) determined in accordance with points 5.4.1.4 of this Annex

(***) UN Regulation No. 100 of the Economic Commission for Europe of the United Nations (UNECE) — Uniform provisions concerning the approval of vehicles with regard to specific requirements for the electric powertrain (OJ L449, 15.12.2021 p. 1).'