This text is meant purely as a documentation tool and has no legal effect. The Union's institutions do not assume any liability for its contents. The authentic versions of the relevant acts, including their preambles, are those published in the Official Journal of the European Union and available in EUR-Lex. Those official texts are directly accessible through the links embedded in this document

►B REGULATION (EU) 2018/858 OF THE EUROPEAN PARLIAMENT AND OF THE COUNCIL

of 30 May 2018

on the approval and market surveillance of motor vehicles and their trailers, and of systems, components and separate technical units intended for such vehicles, amending Regulations (EC) No 715/2007 and (EC) No 595/2009 and repealing Directive 2007/46/EC

(Text with EEA relevance)

(OJ L 151, 14.6.2018, p. 1)

Amended by:

		Official Journal		
		No	page	date
►M1	Regulation (EU) 2019/2144 of the European Parliament and of the Council of 27 November 2019	L 325	1	16.12.2019
►M2	Commission Delegated Regulation (EU) 2021/1244 of 20 May 2021	L 272	16	30.7.2021
►M3	Commission Delegated Regulation (EU) 2021/1445 of 23 June 2021	L 313	4	6.9.2021
►M4	Commission Delegated Regulation (EU) 2022/2236 of 20 June 2022	L 296	1	16.11.2022
►M5	Regulation (EU) 2024/1257 of the European Parliament and of the Council of 24 April 2024	L 1257	1	8.5.2024
►M6	Regulation (EU) 2024/1610 of the European Parliament and of the Council of 14 May 2024	L 1610	1	6.6.2024
►M7	Regulation (EU) 2024/1689 of the European Parliament and of the Council of 13 June 2024	L 1689	1	12.7.2024
►M8	Commission Delegated Regulation (EU) 2026/1188 of 23 March 2026	L 1188	1	2.6.2026
►M9	Commission Delegated Regulation (EU) 2026/699 of 23 March 2026	L 699	1	3.6.2026

Corrected by:

►C1 Corrigendum, OJ L 398, 11.11.2021, p. 29 (2019/2144)

►C2 Corrigendum, OJ L 304, 24.11.2022, p. 103 (2022/2236)

▼B

REGULATION (EU) 2018/858 OF THE EUROPEAN PARLIAMENT AND OF THE COUNCIL

of 30 May 2018

on the approval and market surveillance of motor vehicles and their trailers, and of systems, components and separate technical units intended for such vehicles, amending Regulations (EC) No 715/2007 and (EC) No 595/2009 and repealing Directive 2007/46/EC

(Text with EEA relevance)

CHAPTER I

SUBJECT MATTER, SCOPE AND DEFINITIONS

Article 1

Subject matter

1. This Regulation lays down the administrative provisions and technical requirements for the type-approval and placing on the market of all new vehicles, systems, components and separate technical units, referred to in Article 2(1), and for individual vehicle approvals.

This Regulation also lays down provisions for the placing on the market and the entry into service of parts and equipment that may pose a serious risk to the correct functioning of the essential systems of the vehicles referred to in Article 2(1).

2. This Regulation lays down the requirements for the market surveillance of vehicles, systems, components and separate technical units that are subject to approval. This Regulation also lays down the requirements for the market surveillance of parts and equipment for such vehicles.

Article 2

Scope

1. This Regulation applies to motor vehicles of categories M and N and their trailers of category O, that are intended to be used on public roads, including those designed and constructed in one or more stages, and to systems, components and separate technical units, as well as to parts and equipment, designed and constructed for such vehicles and their trailers.

2. This Regulation does not apply to the following vehicles:

(a) agricultural or forestry vehicles, as defined in Regulation (EU) No 167/2013 of the European Parliament and of the Council ([1]);

([1]) Regulation (EU) No 167/2013 of the European Parliament and of the Council of 5 February 2013 on the approval and market surveillance of agricultural or forestry vehicles (OJ L 60, 2.3.2013, p. 1).

▼B

(b) two- or three-wheel vehicles and quadricycles, as defined in Regulation (EU) No 168/2013 of the European Parliament and of the Council ([1]);

(c) track-laying vehicles;

(d) vehicles designed and constructed or adapted for use by the armed services only.

3. For the following vehicles, the manufacturer may apply for type-approval or individual vehicle approval under this Regulation, provided that those vehicles fulfil the requirements of this Regulation:

(a) vehicles designed and constructed for use principally on construction sites or in quarries, port or airport facilities;

(b) vehicles designed and constructed or adapted for use by civil protection, fire services and forces responsible for maintaining public order;

(c) any self-propelled vehicle designed and constructed specifically to perform work and that, because of its construction characteristics, is not suitable for carrying passengers or for transporting goods, and that is not machinery mounted on a motor vehicle chassis.

Such approvals shall be without prejudice to the application of Directive 2006/42/EC of the European Parliament and of the Council ([2]).

4. For the following vehicles, the manufacturer may apply for individual vehicle approval under this Regulation:

(a) vehicles intended exclusively for racing on roads;

(b) prototypes of vehicles used on the road under the responsibility of a manufacturer to perform a specific test programme provided they have been specifically designed and constructed for that purpose.

Article 3

Definitions

For the purposes of this Regulation and the regulatory acts listed in Annex II, except as otherwise provided therein, the following definitions apply:

(1) ‘type-approval’ means the procedure whereby an approval authority certifies that a type of vehicle, system, component or separate technical unit satisfies the relevant administrative provisions and technical requirements;

([1]) Regulation (EU) No 168/2013 of the European Parliament and of the Council of 15 January 2013 on the approval and market surveillance of two- or three-wheel vehicles and quadricycles (OJ L 60, 2.3.2013, p. 52).

([2]) Directive 2006/42/EC of the European Parliament and of the Council of 17 May 2006 on machinery, and amending Directive 95/16/EC (OJ L 157, 9.6.2006, p. 24).

▼B

(2) ‘EU type-approval’ means the procedure whereby an approval authority certifies that a type of vehicle, system, component or separate technical unit satisfies the relevant administrative provisions and technical requirements of this Regulation;

(3) ‘national type-approval’ means the procedure whereby an approval authority certifies that a type of vehicle, system, component or separate technical unit satisfies the relevant administrative provisions and technical requirements laid down by the law of a Member State, the validity of such approval being restricted to the territory of that Member State;

(4) ‘type-approval certificate’ means the document whereby the approval authority officially certifies that a type of vehicle, system, component or separate technical unit is type-approved;

(5) ‘certificate of conformity’ means the document issued by the manufacturer which certifies that a produced vehicle conforms to the approved type of vehicle and complies with all regulatory acts that were applicable at the time of its production;

(6) ‘individual vehicle approval’ means the procedure whereby an approval authority certifies that a particular vehicle, whether unique or not, satisfies the relevant administrative provisions and technical requirements for EU individual vehicle approval or national individual vehicle approval;

(7) ‘whole-vehicle type-approval’ means the procedure whereby an approval authority certifies that an incomplete, complete or completed type of vehicle satisfies the relevant administrative provisions and technical requirements;

(8) ‘multi-stage type-approval’ means the procedure whereby one or more approval authorities certify that depending on its state of completion, an incomplete or completed type of vehicle satisfies the relevant administrative provisions and technical requirements;

(9) ‘step-by-step type-approval’ means the procedure consisting of the step-by-step collection of the whole set of EU type-approval certificates or UN type-approval certificates for the systems, components and separate technical units forming part of a vehicle, and which leads, in its final stage, to the whole-vehicle type-approval;

(10) ‘single-step type-approval’ means the procedure whereby an approval authority certifies, by means of a single operation, that a type of vehicle, system, component or separate technical unit as a whole satisfies the relevant administrative provisions and technical requirements;

▼B

(11) ‘mixed type-approval’ means a step-by-step type-approval for which one or more system type-approvals have been obtained during the final stage of the whole-vehicle type-approval, without the need to issue the EU type-approval certificates for those systems;

(12) ‘system type-approval’ means the procedure whereby an approval authority certifies that a type of system satisfies the relevant administrative provisions and technical requirements;

(13) ‘separate technical unit type-approval’ means the procedure whereby an approval authority certifies that a type of separate technical unit satisfies the relevant administrative provisions and technical requirements in relation to one or more specified types of vehicles;

(14) ‘component type-approval’ means the procedure whereby an approval authority certifies that a type of component independently of a vehicle satisfies the relevant administrative provisions and technical requirements;

(15) ‘vehicle’ means any motor vehicle or its trailer;

(16) ‘motor vehicle’ means any power-driven vehicle that is designed and constructed to be moved by its own means, that has at least four wheels, is complete, completed or incomplete, and has a maximum design speed exceeding 25 km/h;

(17) ‘trailer’ means any non-self-propelled vehicle on wheels designed and constructed to be towed by a motor vehicle, that can articulate at least around a horizontal axis perpendicular to the longitudinal median plane and around a vertical axis parallel to the longitudinal median plane of the towing motor vehicle;

(18) ‘system’ means an assembly of devices combined to perform one or more specific functions in a vehicle and that is subject to the requirements of this Regulation or any of the regulatory acts listed in Annex II;

(19) ‘component’ means a device that is intended to be part of a vehicle, that can be type-approved independently of a vehicle and that is subject to the requirements of this Regulation or any of the regulatory acts listed in Annex II where the specific regulatory act makes express provision to that effect;

(20) ‘separate technical unit’ means a device that is intended to be part of a vehicle that can be type-approved separately, but only in relation to one or more specified types of vehicle and that is subject to the requirements of this Regulation or any of the regulatory acts listed in Annex II where the specific regulatory act makes express provisions to that effect;

▼B

(21) ‘parts’ means goods used for the assembly, repair and maintenance of a vehicle, as well as spare parts;

(22) ‘equipment’ means goods other than parts that can be added to or installed on a vehicle;

(23) ‘spare parts’ means goods that are to be installed in or on a vehicle to replace original parts of that vehicle, including goods that are necessary for the use of a vehicle, with the exception of fuel;

(24) ‘base vehicle’ means any vehicle that is used at the initial stage of a multi-stage type-approval;

(25) ‘incomplete vehicle’ means any vehicle that must undergo at least one further stage of completion in order to meet the relevant technical requirements of this Regulation;

(26) ‘completed vehicle’ means a vehicle resulting from the multi-stage type-approval that meets the relevant technical requirements of this Regulation;

(27) ‘complete vehicle’ means a vehicle that does not need to be completed in order to meet the relevant technical requirements of this Regulation;

(28) ‘end-of-series vehicle’ means a vehicle that is part of a stock and that, due to the entry into force of new technical requirements against which it has not been type-approved, cannot or can no longer be made available on the market, registered or entered into service;

(29) ‘alternative-fuel vehicle’ means a vehicle designed to be capable of running on at least one type of fuel that is either gaseous at atmospheric temperature and pressure, or that is substantially derived from non-mineral oil;

(30) ‘vehicle produced in small series’ means a type of vehicle of which the number of units that are made available on the market, registered or entered into service do not exceed the quantitative annual limits laid down in Annex V;

(31) ‘special purpose vehicle’ means a vehicle of category M, N or O having specific technical features that enable it to perform a function that requires special arrangements or equipment;

(32) ‘type of vehicle’ means a particular group of vehicles that shares at least the features specified in Part B of Annex I, including a group of vehicles that contains variants and versions as referred to therein;

▼M6

(33) ‘semi-trailer’ means a trailer in which the axle, or axles are positioned behind the centre of gravity of the vehicle (when uniformly loaded), and which is equipped with a connecting device permitting horizontal and vertical forces to be transmitted to the towing vehicle;

▼B

(34) ‘market surveillance’ means the activities carried out and measures taken by the market surveillance authorities to ensure that vehicles, systems, components and separate technical units as well as parts and equipment made available on the market comply with the requirements set out in the relevant Union harmonisation legislation and do not endanger health, safety, the environment or any other aspect of public interest protection;

(35) ‘market surveillance authority’ means the national authority or authorities responsible for carrying out market surveillance on the territory of the Member State;

(36) ‘approval authority’ means the authority or authorities of a Member State, notified to the Commission by that Member State, with competence for all aspects of the type-approval of a vehicle, system, component or separate technical unit, or of the individual vehicle approval, for the authorisation process for parts and equipment, for issuing and, if appropriate, for withdrawing or refusing approval certificates, for acting as the contact point for the approval authorities of the other Member States, for designating the technical services, and for ensuring that the manufacturer meets its obligations regarding the conformity of production;

(37) ‘national authority’ means an approval authority or any other authority involved in and responsible for market surveillance, border control or registration in a Member State in respect of vehicles, systems, components, separate technical units, parts or equipment;

(38) ‘technical service’ means an organisation or body designated by the approval authority as a testing laboratory to carry out tests, or as a conformity assessment body to carry out the initial assessment and other tests or inspections;

(39) ‘national accreditation body’ means a national accreditation body as defined in point (11) of Article 2 of Regulation (EC) No 765/2008;

(40) ‘manufacturer’ means a natural or legal person who is responsible for all aspects of the type-approval of a vehicle, system, component or separate technical unit, or the individual vehicle approval, or the authorisation process for parts and equipment, for ensuring conformity of production and for market surveillance matters regarding that vehicle, system, component, separate technical unit, part and equipment produced, irrespective of whether or not that person is directly involved in all stages of the design and construction of that vehicle, system, component or separate technical unit concerned;

(41) ‘manufacturer's representative’ means any natural or legal person established in the Union who is duly appointed by the manufacturer to represent the manufacturer before the approval authority or the market surveillance authority and to act on the manufacturer's behalf in matters covered by this Regulation;

▼B

(42) ‘importer’ means a natural or legal person established in the Union who places on the market a vehicle, system, component, separate technical unit, part or equipment that has been manufactured in a third country;

(43) ‘distributor’ means a dealer or any other natural or legal person in the supply chain, other than the manufacturer or the importer, who makes available on the market a vehicle, system, component, separate technical unit, part or equipment;

(44) ‘economic operator’ means the manufacturer, the manufacturer's representative, the importer or the distributor;

(45) ‘independent operator’ means a natural or legal person, other than an authorised dealer or repairer, who is directly or indirectly involved in the repair and maintenance of vehicles, and include repairers, manufacturers or distributors of repair equipment, tools or spare parts, as well as publishers of technical information, automobile clubs, roadside assistance operators, operators offering inspection and testing services, operators offering training for installers, manufacturers and repairers of equipment for alternative-fuel vehicles; it also means authorised repairers, dealers and distributors within the distribution system of a given vehicle manufacturer to the extent that they provide repair and maintenance services for vehicles in respect of which they are not members of the vehicle manufacturer's distribution system;

(46) ‘authorised repairer’ means a natural or legal person who provides repair and maintenance services for vehicles and who operates within the manufacturer's distribution system;

(47) ‘independent repairer’ means a natural or legal person who provides repair and maintenance services for vehicles and who does not operate within the manufacturer's distribution system;

(48) ‘vehicle repair and maintenance information’ means all information, including all subsequent amendments and supplements thereto, that is required for diagnosing, servicing and inspecting a vehicle, preparing it for road worthiness testing, repairing, re-programming or re-initialising of a vehicle, or that is required for the remote diagnostic support of a vehicle or for the fitting on a vehicle of parts and equipment, and that is provided by the manufacturer to his authorised partners, dealers and repairers or is used by the manufacturer for the repair and maintenance purposes;

(49) ‘vehicle on-board diagnostic (OBD) information’ means the information generated by a system that is on board a vehicle or that is connected to an engine, and that is capable of detecting a malfunction, and, where applicable, is capable of signalling its occurrence by means of an alert system, is capable of identifying the likely area of malfunction by means of information stored in a computer memory, and is capable of communicating that information off-board;

▼B

(50) ‘placing on the market’ means making available a vehicle, system, component, separate technical unit, part or equipment for the first time in the Union;

(51) ‘making available on the market’ means any supply of a vehicle, system, component, separate technical unit, part or equipment for distribution or use on the market in the course of a commercial activity, whether in return for payment or free of charge;

(52) ‘entry into service’ means the first use, for its intended purpose, in the Union, of a vehicle, system, component, separate technical unit, part or equipment;

(53) ‘registration’ means an administrative authorisation for the entry into service in road traffic of an approved vehicle, involving the identification of the vehicle and the issuing to it of a serial number, known as the registration number, whether on a permanent or temporary basis;

(54) ‘virtual testing method’ means computer simulations, including calculations, to demonstrate that a vehicle, a system, a component or a separate technical unit fulfils the technical requirements of a regulatory act listed in Annex II without requiring the use of a physical vehicle, system, component or separate technical unit;

(55) ‘alternative requirements’ means administrative provisions and technical requirements that aim to ensure a level of functional safety, environmental protection and occupational safety that to the greatest extent practicable is equivalent to the level provided for by one or more of the regulatory acts listed in Annex II;

(56) ‘on-site assessment’ means a verification in the premises of a technical service or of one of its subcontractors or subsidiaries;

(57) ‘surveillance on-site assessment’ means a periodic routine on-site assessment that is neither the on-site assessment undertaken for the initial designation of the technical service or of one of its subcontractors or subsidiaries, nor the on-site assessment undertaken for the renewal of that designation;

(58) ‘date of manufacture of the vehicle’ means the date on which the manufacture of a vehicle was finalised in accordance with the approval obtained by the manufacturer;

▼M6

(59) ‘e-trailer’ means any kind of trailer that is able to contribute to the propulsion of the vehicle combination by using its own electric powertrain and which is not able to be used on public roads without being actively towed by a motor vehicle.

▼B

Article 4

Vehicle categories

1. For the purposes of this Regulation, the following vehicle categories shall apply:

▼B

(a) Category M consists of motor vehicles designed and constructed primarily for the carriage of passengers and their luggage, divided into:

(i) Category M_1: motor vehicles with not more than eight seating positions in addition to the driver's seating position and without space for standing passengers, regardless of whether the number of seating positions is restricted to the driver's seating position;

(ii) Category M_2: motor vehicles with more than eight seating positions in addition to the driver's seating position and having a maximum mass not exceeding 5 tonnes, regardless of whether those motor vehicles have space for standing passengers; and

(iii) Category M_3: motor vehicles with more than eight seating positions in addition to the driver's seating position and having a maximum mass exceeding 5 tonnes, regardless of whether those motor vehicles have space for standing passengers;

(b) Category N consists of motor vehicles designed and constructed primarily for the carriage of goods, divided into:

(i) Category N_1: motor vehicles with a maximum mass not exceeding 3,5 tonnes;

(ii) Category N_2: motor vehicles with a maximum mass exceeding 3,5 tonnes but not exceeding 12 tonnes; and

(iii) Category N_3: motor vehicles with a maximum mass exceeding 12 tonnes;

(c) Category O consists of trailers, divided into:

(i) Category O_1: trailers with a maximum mass not exceeding 0,75 tonnes;

(ii) Category O_2: trailers with a maximum mass exceeding 0,75 tonnes but not exceeding 3,5 tonnes;

(iii) Category O_3: trailers with a maximum mass exceeding 3,5 tonnes but not exceeding 10 tonnes; and

(iv) Category O_4: trailers with a maximum mass exceeding 10 tonnes.

2. The criteria for the categorisation of vehicles, types of vehicle, variants and versions are set out in Annex I.

The Commission is empowered to adopt delegated acts in accordance with Article 82, amending Annex I in relation to the types of vehicle and types of bodywork to take account of technical progress.

▼B

CHAPTER II

GENERAL OBLIGATIONS

Article 5

Technical requirements

1. Vehicles, systems, components and separate technical units shall comply with the requirements of the regulatory acts listed in Annex II.

2. Vehicles, systems, components and separate technical units shall be considered not to comply with this Regulation in the following cases in particular:

(a) if they deviate from the particulars in the EU type-approval certificates and their attachments or from the descriptive particulars in the test reports more than is permitted in the relevant regulatory act;

(b) if the performance criteria or limit values for series production laid down in the relevant regulatory act have not been fulfilled under all the conditions set out in the relevant regulatory act;

(c) if any information given by the manufacturer in the information document is not reproducible under all the conditions set out in the relevant regulatory act by approval authorities, market surveillance authorities or the Commission.

Only checks, tests, inspections and assessments conducted by or carried out on behalf of the approval authorities, market surveillance authorities or the Commission shall be taken into account when assessing compliance for the purposes of this paragraph.

3. The Commission is empowered to adopt delegated acts in accordance with Article 82, amending Annex II in order to take into account technological and regulatory developments by introducing and updating references to the regulatory acts that contain the requirements with which vehicles, systems, components and separate technical units have to comply.

▼M7

4. When adopting delegated acts pursuant to paragraph 3 concerning Artificial Intelligence systems which are safety components within the meaning of Regulation (EU) 2024/1689 of the European Parliament and of the Council ([1]), the requirements set out in Chapter III, Section 2, of that Regulation shall be taken into account.

▼B

Article 6

Obligations of Member States

1. Member States shall establish or appoint their own approval authorities and market surveillance authorities. Member States shall notify the Commission of the establishment and appointment of those authorities.

([1]) Regulation (EU) 2024/1689 of the European Parliament and of the Council of 13 June 2024 laying down harmonised rules on artificial intelligence and amending Regulations (EC) No 300/2008, (EU) No 167/2013, (EU) No 168/2013, (EU) 2018/858, (EU) 2018/1139 and (EU) 2019/2144 and Directives 2014/90/EU, (EU) 2016/797 and (EU) 2020/1828 (Artificial Intelligence Act) (OJ L, 2024/1689, 12.7.2024, ELI: http://data.europa.eu/eli/reg/2024/1689/oj).

▼B

That notification shall include the name of those authorities, their address, including their electronic address, and their areas of responsibility. The Commission shall publish on its website a list and contact details of the approval authorities and the market surveillance authorities.

Member States shall ensure that their own approval authorities and market surveillance authorities adhere to a strict separation of roles and responsibilities and that they each function independently from each other. Those authorities may be within the same organisation provided that their activities are managed autonomously as part of separate structures.

2. A Member State where more than one approval authority is responsible for vehicle approval including individual vehicle approval shall designate one of them that has the competence for issuing type-approvals as the sole approval authority that is responsible for the exchange of information with the approval authorities of other Member States for the purpose of Article 11 and for the fulfilment of obligations set out in Chapter XV.

3. A Member State where more than one market surveillance authority is responsible for market surveillance shall designate one of them as the sole market surveillance authority that is responsible for the exchange of information with the market surveillance authorities of other Member States for the purpose of Article 11.

4. Member States shall only permit the placing on the market, the registration or the entry into service of vehicles, systems, components and separate technical units that comply with this Regulation.

5. Member States shall not prohibit, restrict or impede the placing on the market, the registration or the entry into service of vehicles, systems, components or separate technical units that comply with this Regulation, except in the cases provided for in Chapter XI.

By way of derogation from the first subparagraph of this paragraph, Member States may decide not to allow the circulation on the road, the placing on the market, the registration or the entry into service of vehicles that have been type-approved in accordance with this Regulation, but that exceed the harmonised dimensions, weights and axle loads laid down in Annex I to Council Directive 96/53/EC ([1]).

6. Member States shall organise and carry out market surveillance and controls of vehicles, systems, components and separate technical units entering the market, in accordance with this Regulation and Chapter III of Regulation (EC) No 765/2008.

7. Member States shall take the necessary measures to ensure that market surveillance authorities are entitled, where they consider it necessary and justified, to enter the premises of economic operators on their territory and to take any necessary samples of vehicles, systems, components and separate technical units for the purposes of compliance testing.

([1]) Council Directive 96/53/EC of 25 July 1996 laying down for certain road vehicles circulating within the Community the maximum authorized dimensions in national and international traffic and the maximum authorized weights in international traffic (OJ L 235, 17.9.1996, p. 59).

▼B

8. The Member States shall periodically review and assess the functioning of their type-approval activities. Such reviews and assessments shall be carried out at least every four years, and the results thereof shall be communicated to the Commission and the Forum for Exchange of Information on Enforcement referred to in Article 11 (‘the Forum’).

The Member States shall make accessible to the public a summary of the results of periodic reviews and assessments.

The Member States shall report to the Commission and the Forum on how they address any recommendations referred to in Article 11(5) issued by the Forum.

9. The Member States shall periodically review and assess the functioning of their market surveillance activities. Such reviews and assessments shall be carried out at least every four years and the results thereof shall be communicated to the Commission and to the Forum.

The Member States shall make accessible to the public a summary of the results of periodic reviews and assessments.

The Member States shall report to the Commission and the Forum on how they address any recommendations referred to in Article 11(5) issued by the Forum.

10. The Commission may adopt implementing acts laying down the common criteria for the format of reporting on the reviews and assessments referred to in paragraphs 8 and 9 of this Article. Those implementing acts shall be adopted in accordance with the examination procedure referred to in Article 83(2).

Article 7

Obligations of approval authorities

1. Approval authorities shall only approve vehicles, systems, components or separate technical units that comply with this Regulation.

2. Approval authorities shall carry out their duties independently and impartially. They shall observe confidentiality in order to protect commercial secrets, subject to the obligation laid down in Article 9 (4) to make information available to the Commission and to other applicable disclosure requirements laid down in Union law in order to protect the interests of users in the Union.

Approval authorities shall cooperate efficiently and effectively, and shall share information relevant to their role and functions.

▼B

3. For the purpose of enabling market surveillance authorities to carry out checks, approval authorities shall make available to market surveillance authorities the necessary information related to the type-approval of the vehicles, systems, components and separate technical units that are subject to compliance verification checks. That information shall include at least the information included in the EU type-approval certificate and its attachments referred to in Article 28(1). Approval authorities shall provide that information to the market surveillance authorities without undue delay.

4. Where an approval authority has been informed in accordance with Chapter XI that a vehicle, system, component or separate technical unit is suspected of presenting a serious risk or of being in non-compliance, it shall take all necessary measures to review the type-approval granted and, where appropriate, correct or withdraw the type-approval depending on the reasons and the seriousness of the deviations demonstrated.

Article 8

Obligations of market surveillance authorities

1. Market surveillance authorities shall carry out regular checks to verify that vehicles, systems, components and separate technical units comply with the relevant requirements. Such checks shall be performed on an adequate scale by means of documentary checks and, where appropriate, laboratory tests and on-road tests conducted on the basis of statistically relevant samples.

When carrying out such checks, market surveillance authorities shall take account of:

(a) established principles of risk assessment;

(b) substantiated complaints; and

(c) any other relevant information, including the information exchanged in the Forum and testing results published by recognised third parties that meet the requirements laid down by the implementing acts referred to in Article 13(10).

2. Without prejudice to paragraph 1, the market surveillance authorities of each Member State shall carry out at least a minimum number of tests on vehicles per year. That minimum number of tests per Member State shall be one for every 40 000 new motor vehicles registered in that Member State in the preceding year, but shall not be less than five tests.

Each test shall verify compliance with the applicable regulatory acts listed in Annex II.

3. Market surveillance authorities carrying out more than five tests per year shall carry out at least 20 % of the minimum number of tests in the form of emission-related tests comparable to type-approval tests covering all applicable emissions-related requirements to the tested type laid down in the regulatory acts listed in Annex II.

▼B

4. The market surveillance authority of one Member State may agree with the market surveillance authority of another Member State that the market surveillance authority of that other Member State carries out the tests required under paragraphs 2 and 3.

5. The market surveillance authority of a Member State may agree with the Commission that the Commission carries out tests required under paragraph 3 at the expense of that Member State. Any tests carried out under this paragraph shall count towards the minimum number of tests required under paragraph 2.

6. Each Member State shall prepare annually a comprehensive overview of its planned market surveillance checks which it shall submit to the Forum no later than 1 March.

7. Every two years, each Member State shall draw up a report of its findings following any compliance verification checks it has carried out in the previous two years. That report shall be submitted to the Forum by 30 September of the year following the end of the two-year period concerned.

8. Market surveillance authorities shall require economic operators to make available to the authorities such documentation, information and other technical specifications, including access to software and algorithms, that the authorities consider necessary for the purpose of carrying out the market surveillance activities.

9. For type-approved vehicles, systems, components and separate technical units, market surveillance authorities shall take due account of certificates of conformity, type-approval marks or type-approval certificates presented by economic operators.

10. Market surveillance authorities shall take appropriate measures to alert users within the territories of their Member States within an adequate timeframe of hazards that they or the Commission have identified in relation to any vehicle, system, component or separate technical unit so as to prevent or reduce the risk of injury or other damage, including by making such information available on the website of the market surveillance authority.

Market surveillance authorities shall cooperate with economic operators regarding actions that could prevent or reduce the risks caused by vehicles, systems, components or separate technical units that those operators have made available on the market.

11. Where the market surveillance authorities of one Member State decide to withdraw a vehicle, system, component or separate technical unit from the market in accordance with Chapter XI, they shall inform the economic operator concerned and the relevant approval authority.

▼B

12. Market surveillance authorities shall carry out their duties independently and impartially. They shall observe confidentiality in order to protect commercial secrets, subject to the obligation laid down in Article 9(4) to make information available to the Commission and to other applicable disclosure requirements laid down in Union law in order to protect the interests of users in the Union.

13. The market surveillance authorities of the different Member States shall coordinate their market surveillance activities, cooperate with each other and shall share the results of those activities with each other and with the Forum. Where appropriate, the market surveillance authorities shall agree on work-sharing and specialisation.

14. Where more than one authority in a Member State is responsible for market surveillance and external border controls, those authorities shall cooperate efficiently and effectively, and shall share information relevant to their respective roles and functions.

15. The Commission may adopt implementing acts laying down common criteria for establishing the adequate scale of the compliance verification checks referred to in paragraph 1 of this Article and laying down common criteria for the format of the overview and the reporting referred to respectively in paragraphs 6 and 7 of this Article. Those implementing acts shall be adopted in accordance with the examination procedure referred to in Article 83(2).

Article 9

Compliance verification by the Commission

1. The Commission shall organise and carry out, at its own expense, tests and inspections to verify that vehicles, systems, components and separate technical units comply with the relevant requirements.

The tests and inspections shall be performed, *inter alia*, by means of laboratory tests and on-road tests, on the basis of statistically relevant samples, and shall be supplemented by documentary checks.

When carrying out those tests and inspections, the Commission shall take account of:

(a) established principles of risk assessment;

(b) substantiated complaints; and

(c) any other relevant information, including information exchanged in the Forum, testing results published by recognised third parties that meet the requirements laid down by the implementing acts referred to in Article 13(10), information concerning new technologies on the market and reports resulting from on-road remote sensing.

▼B

The Commission may entrust the performance of tests or inspections to technical services, in which case, the technical service shall be acting on behalf of the Commission. Where the Commission entrusts the performance of tests or inspections to technical services for the purposes of this Article, the Commission shall ensure that the technical service that is used is not the same as the technical service that performed the original type-approval test.

Those tests and inspections may take place:

(a) on new vehicles supplied by manufacturers or other economic operator, as provided for in paragraph 2;

(b) on registered vehicles with the agreement of the holder of the vehicle registration certificate.

2. Manufacturers holding type-approvals or other economic operators shall, upon request, supply to the Commission, in return for fair compensation, a statistically relevant number of production vehicles, systems, components and separate technical units selected by the Commission that are representative for the vehicles, systems, components and separate technical units available for placing on the market under that type-approval. Such vehicles, systems, components and separate technical units shall be supplied for testing at the time and place, and for such period, as required by the Commission.

3. Before the Commission carries out its tests and inspections, it shall notify the Member State that granted the type-approval and the Member State where the vehicle, system, component or separate technical unit was made available on the market.

The Member States shall cooperate with the Commission when the Commission carries out the tests and inspections.

4. For the purpose of enabling the Commission to carry out the tests and inspections under this Article, Member States shall without undue delay make available to the Commission the necessary information related to the type-approval of the vehicles, systems, components and separate technical units that are subject to compliance verification. That information shall include at least the information included in the EU type-approval certificate and its attachments referred to in Article 28(1).

5. Manufacturers shall make available to the Commission, free of charge and without undue delay, any data which are needed for the purpose of compliance verification and which are not available in the EU type-approval certificate and its attachments referred to in Article 28(1).

Such data shall include all parameters and settings that are necessary to accurately replicate the test conditions that applied at the time of the type-approval testing. The Commission shall adopt implementing acts specifying the data that are to be made available, subject to the protection of commercial secrets and the preservation of personal data pursuant to Union and national law. Those implementing acts shall be adopted in accordance with the examination procedure referred to in Article 83(2).

▼B

6. Where the Commission establishes that the vehicles, systems, components or separate technical units do not comply with the type-approval requirements laid down in this Regulation, that the vehicles, systems, components or separate technical unit do not comply with the type-approval or that the type-approval has been granted on the basis of incorrect data, it shall initiate the procedure provided for in Articles 53 or 54.

Where the tests and inspections call into question the correctness of the type-approval itself, the Commission shall immediately inform the approval authority or authorities concerned as well as the Forum.

The Commission shall inform the relevant approval authorities and market surveillance authorities in order for them to take appropriate measures to alert users within the Union, within an adequate timeframe, of any non-compliance that it has identified in relation to any vehicle, system, component or separate technical unit so as to prevent or reduce the risk of injury or other damage.

The Commission shall make publicly available a report of its findings following any compliance verification testing it has carried out and shall forward its findings to the Member States and to the Forum. That report shall contain details of the vehicles, systems, components and separate technical units that were assessed and the identity of the manufacturer concerned, as well as a short description of the findings, including the nature of the non-compliance, if any.

Article 10

Assessments by the Commission

1. The Commission shall organise and carry out assessments of the procedures put in place by approval authorities that have granted EU type-approvals within the five years preceding the assessment, in particular of the procedures for granting type-approvals, for carrying out conformity of production and for the designation and monitoring of technical services. Such assessments shall include an evaluation, using a random sample, of the compliance of granted type-approvals with applicable requirements referred to in point (c) of Article 26(2) within the five years preceding the assessment.

2. The assessments shall aim to assist the approval authorities that grant EU type-approvals to ensure the uniform application of this Regulation and to share best practices.

3. The assessments shall be carried out in compliance with the law of the Member State concerned, with due regard for the rights of the authorities concerned, and shall comply with the principle of proportionality. The Commission shall carry out its duties independently and impartially, and shall observe confidentiality in order to protect commercial secrets in accordance with the applicable law. The Commission shall bear the costs arising from such assessments.

▼B

4. The approval authorities concerned shall facilitate the assessment by cooperating with the Commission, giving it any necessary assistance and providing it with any necessary documentation.

5. The Commission shall ensure that the personnel participating in the assessment are sufficiently qualified and adequately instructed. The Commission shall, a sufficient time before the assessment, inform the Member States and the approval authorities concerned of the date on which the assessment is to begin and the identity of the personnel who are to carry out the assessment. The duration of the assessment at the premises of the approval authority concerned shall not normally exceed two days, and shall not in any case exceed three days.

6. Each approval authority that has granted at least one EU type-approval during a five year period shall be assessed by the Commission once during that period.

By way of derogation from the first subparagraph, the assessment of an approval authority may be less frequent if the Commission considers that the first assessment of that authority demonstrates that the procedures put in place ensure the effective application of this Regulation, taking into account the scope and range of EU type-approvals granted.

7. The Commission shall communicate the outcome of the assessment, including any recommendations, to the Forum and shall make a summary of the outcome publicly available. The Forum shall examine the outcome of the assessment.

8. The Member States shall report to the Commission and to the Forum on how they address any recommendations included in the outcome of the assessment.

9. Taking duly into account the considerations of the Forum, the Commission shall adopt implementing acts laying down common criteria for setting out the scope of, and the methodology used for, the assessment, the composition of the assessment team, the plan for the assessments covering a period of at least five years and the specific conditions under which the frequency of such assessments may be reduced. Those implementing acts shall be adopted in accordance with the examination procedure referred to in Article 83(2).

Article 11

Forum for Exchange of Information on Enforcement

1. The Commission shall establish, chair and manage a Forum for Exchange of Information on Enforcement (‘the Forum’).

The Forum shall be composed of representatives appointed by each Member State representing their approval authorities and market surveillance authorities.

▼B

Whenever appropriate, technical services, recognised third parties that meet the requirements laid down by the implementing acts referred to in Article 13(10), representatives of the European Parliament, of the industry and of the relevant economic operators, as well as of stakeholders involved in safety and environment matters, may be invited as observers to the Forum in accordance with the rules of procedures referred to in paragraph 7 of this Article.

The advisory tasks of the Forum shall have as their objective the promotion of best practices in order to facilitate the uniform interpretation and implementation of this Regulation, the exchange of information on enforcement problems, cooperation, in particular regarding the assessment, designation and monitoring of technical services, the development of working methods and tools, the development of an electronic information exchange procedure, and the evaluation of harmonised enforcement projects and penalties.

2. The Forum shall consider:

(a) matters related to the uniform interpretation of the requirements laid down in this Regulation and in the regulatory acts listed in Annex II during implementation of those requirements;

(b) the results of the activities relating to type-approval and market surveillance that were carried out by Member States in accordance with Article 6(8) and (9);

(c) the results of tests and inspections carried out by the Commission in accordance with Article 9;

(d) the assessments carried out by the Commission in accordance with Article 10;

(e) test reports regarding possible non-compliance presented by recognised third parties that meet the requirements laid down by the implementing acts referred to in Article 13(10);

(f) the results of the conformity of production activities carried out by approval authorities in accordance with Article 31;

(g) the information submitted by Member States under Article 67(6) on their procedures for the assessment, designation and notification of technical services and for the monitoring of technical services;

(h) matters of general relevance with regard to the implementation of the requirements laid down in this Regulation in relation to the assessment, designation and monitoring of technical services in accordance with Articles 67(10) and 78(4);

(i) infringements by economic operators;

(j) implementation of the corrective or restrictive measures laid down in Chapter XI;

▼B

(k) the planning, coordination and results of market surveillance activities;

(l) matters regarding access to vehicle OBD information and vehicle repair and maintenance information set out in Chapter XIV and, in particular, matters regarding the implementation of the procedures established under Article 65.

3. On the basis of the reports submitted by Member States in accordance with Article 8(7), the Commission shall make a summary report on market surveillance activities publicly available on a two-yearly basis.

4. Each year the Commission shall present a summary of the activities of the Forum to the European Parliament.

5. As part of its advisory task and taking into account the outcome of the considerations under paragraph 2, the Forum may express an opinion or issue a recommendation.

When expressing an opinion or issuing recommendations the Forum shall endeavour to reach a consensus. If no such consensus can be reached, the Forum shall express its opinion or issue its recommendations by a simple majority of the Member States. Each Member State shall have one vote. Member States with diverging positions may request that their positions and the grounds on which they are based be recorded in the Forum's opinion or recommendations.

6. When adopting implementing acts, the Commission shall duly take into account the opinions expressed by the Forum in accordance with paragraph 5.

7. The Forum shall establish its rules of procedure.

Article 12

Online data exchange

1. The Commission and the Member States shall use the common secure electronic exchange system referred to in Article 27 for EU type-approval certificates and their attachments referred to in Article 28(1), including for any test reports as well as amendments, refusals or withdrawals of any EU type-approval.

The Commission and Member States shall use the Rapid Information System (RAPEX), established under Directive 2001/95/EC of the European Parliament and of the Council ([1]) and the Information and Communication System on Market Surveillance (ICSMS), established under Regulation (EC) No 765/2008 for market surveillance, recalls and other relevant activities between market surveillance authorities, Member States and the Commission.

([1]) Directive 2001/95/EC of the European Parliament and of the Council of 3 December 2001 on general product safety (OJ L 11, 15.1.2002, p. 4).

▼B

2. From 5 July 2026, Member States shall make accessible to the public, by vehicle identification number, the certificate of conformity of each vehicle as structured data in electronic format in the common secure electronic exchange system, in accordance with Article 37.

From 5 July 2026, Member States shall make accessible to the public the information contained in the certificate of conformity, excluding vehicle identification numbers, as structured data in electronic format in the common secure electronic exchange system, in accordance with Article 37.

The Commission shall adopt implementing acts establishing the format of, and the criteria for public access to, the information referred to in the first and second subparagraphs of this paragraph. Those implementing acts shall be adopted in accordance with the examination procedure referred to in Article 83(2).

3. The Commission shall take all necessary measures to establish an interface between the common secure electronic exchange system referred to in Article 27, RAPEX and ICSMS in order to facilitate market surveillance activities and ensure coordination, consistency and accuracy of the information provided to consumers and third parties.

4. Member States shall use the common secure electronic exchange system referred to in Article 27, in order to make a list of the EU type-approvals for vehicles, systems, components and separate technical units that they have granted, amended, refused or withdrawn, as well as a list of the technical services which have performed the tests for the respective EU type-approvals, accessible to the public as from 1 September 2022.

The Commission shall adopt implementing acts establishing the format of, and the criteria for public access to, the information referred to in the first subparagraph of this paragraph. Those implementing acts shall be adopted in accordance with the examination procedure referred to in Article 83(2).

5. The Commission shall develop a tool to make publicly accessible test results and complaints about the performance of vehicles, systems, components and separate technical units from recognised third parties that meet the requirements laid down by the implementing acts referred to in Article 13(10).

Article 13

General obligations of manufacturers

1. Manufacturers shall ensure that the vehicles, systems, components and separate technical units that they have manufactured and that are placed on the market have been manufactured and approved in accordance with the requirements laid down in this Regulation, and in particular, those in Article 5.

2. Manufacturers shall be responsible to the approval authority for all aspects of the approval procedure and for ensuring conformity of production.

▼B

In the case of multi-stage type-approval, manufacturers shall also be responsible for the approval and conformity of production of the systems, components or separate technical units that they have added at the stage of vehicle completion. Manufacturers who modify components, systems or separate technical units already approved at earlier stages shall be responsible for the type-approval and conformity of production of the modified components, systems or separate technical units. Manufacturers of the previous stage shall provide information to manufacturers of the subsequent stage regarding any change that may affect component type-approval, system type-approval or separate technical unit type-approval or the whole-vehicle type-approval. Such information shall be provided as soon as the new extension to the whole-vehicle type-approval has been granted and at the latest on the starting date of manufacture of the incomplete vehicle.

3. Manufacturers who modify an incomplete vehicle in such a manner that it qualifies as a different category of vehicle, with the consequence that the requirements already assessed in a previous stage of type-approval have changed, shall also be responsible for compliance with the requirements applicable to the category of vehicles for which the modified vehicle qualifies.

4. For the purposes of EU type-approval of vehicles, systems, components and separate technical units, a manufacturer established outside the Union shall appoint a single representative established within the Union to represent the manufacturer before the approval authority. That manufacturer shall also appoint a single representative established within the Union for the purposes of market surveillance, who may be the same as the representative appointed for the purposes of EU type-approval.

5. Manufacturers shall ensure that their vehicles, systems, components and separate technical units are not designed to incorporate strategies or other means that alter the performance exhibited during test procedures in such a way that they do not comply with this Regulation when operating under conditions that can reasonably be expected in normal operation.

6. Manufacturers shall establish procedures to ensure that series production of vehicles, systems, components and separate technical units remains in conformity with the approved type.

7. Manufacturers shall examine any complaints they receive relating to risks, suspected incidents or non-compliance issues with the vehicles, systems, components, separate technical units, parts and equipment that they have placed on the market.

Manufacturers shall keep a record of such complaints, including for each complaint a description of the issue and the details needed to precisely identify the affected type of vehicle, system, component, separate technical unit, part or equipment, and, in the case of substantiated complaints, manufacturers shall keep their distributors and importers informed thereof.

▼B

8. In addition to the statutory plate fixed to their vehicles and type-approval marks fixed to their components or separate technical units in accordance with Article 38, manufacturers shall indicate their name, registered trade name or registered trade mark and their contact address in the Union on their vehicles, components or separate technical units made available on the market or, where that is not possible, on the packaging or in a document accompanying the component or separate technical unit.

9. Manufacturers shall ensure that, while a vehicle, system, component or separate technical unit is under their responsibility, storage or transport conditions do not jeopardise its compliance with the requirements laid down in this Regulation.

10. Without prejudice to Article 9(5) and subject to the protection of commercial secrets and the preservation of personal data pursuant to Union and national law, manufacturers of vehicles shall make available data which is needed for testing by third parties for possible non-compliance, including all parameters and settings that are necessary to accurately replicate the test conditions that were applied at the time of the type-approval testing.

For the purposes of the first subparagraph of this paragraph, the Commission shall adopt implementing acts specifying the data to be made available free of charge, as well as the requirements to be met by third parties to demonstrate their legitimate interest in the fields of public safety or environmental protection and their recourse to adequate testing facilities. Those implementing acts shall be adopted in accordance with the examination procedure referred to in Article 83 (2).

Article 14

Obligations of manufacturers concerning their vehicles, systems, components, separate technical units, parts and equipment that are not in conformity or that present a serious risk

1. Where a vehicle, system, component, separate technical unit, part or equipment that has been placed on the market or that has entered into service is not in conformity with this Regulation or where the type-approval has been granted on the basis of incorrect data, the manufacturer shall immediately take the corrective measures necessary to bring that vehicle, system, component, separate technical unit, part or equipment into conformity, to withdraw it from the market or to recall it, as appropriate.

The manufacturer shall immediately inform the approval authority that granted the type-approval in detail of the non-conformity and of any measures taken.

2. Where the vehicle, system, component, separate technical unit, part or equipment presents a serious risk, the manufacturer shall immediately provide to the approval authorities and market surveillance authorities detailed information on the risk and on any measures taken in relation thereto.

▼B

3. Manufacturers shall keep the EU type-approval certificates and their attachments referred to in Article 28(1) for a period of 10 years after the end of validity of the EU type-approval of a vehicle and for a period of five years after the end of validity of the EU type-approval of a system, component or separate technical unit.

Manufacturers of a vehicle shall keep at the disposal of the approval authorities for a period of 10 years from the date of manufacture of the vehicle a copy of the certificates of conformity referred to in Article 36.

4. Manufacturers shall, following a reasoned request from a national authority or the Commission, provide that authority or the Commission, with a copy of the EU type-approval certificate, or the authorisation referred to in Article 55(1) demonstrating conformity of the vehicle, system, component, separate technical unit, part or equipment, in a language that can be easily understood by the national authority or the Commission.

Manufacturers shall, following a reasoned request from a national authority, cooperate with that authority on any action taken in accordance with Article 20 of Regulation (EC) No 765/2008 to eliminate the risks posed by the vehicle, system, component, separate technical unit, part or equipment that they have made available on the market.

Article 15

Obligations of manufacturer's representatives

1. The manufacturer's representative shall perform the tasks specified in the mandate received from the manufacturer. That mandate shall at least, provide for the representative to:

(a) have access to the EU type-approval certificate and its attachments referred to in Article 28(1), and to the certificate of conformity in one of the official Union languages; such documentation shall be made available to the approval authorities and to the market surveillance authorities for a period of 10 years after the end of the validity of the EU type-approval of a vehicle and for a period of five years after the end of validity of the EU type-approval of a system, component or separate technical unit;

(b) provide an approval authority, following a reasoned request from that authority, with all information, documentation and any other technical specifications, including access to software and algorithms, that are necessary to demonstrate the conformity of production of a vehicle, system, component or separate technical unit;

(c) cooperate with the approval authorities or the market surveillance authorities, at their request, on any action taken to eliminate the serious risk posed by vehicles, systems, components, separate technical units, parts or equipment covered by that mandate;

▼B

(d) immediately inform the manufacturer about complaints and reports relating to risks, suspected incidents or non-compliance issues that relate to vehicles, systems, components, separate technical units, parts or equipment covered by that mandate;

(e) have the right to terminate the mandate without penalty if the manufacturer acts contrary to its obligations under this Regulation.

2. A manufacturer's representative who terminates the mandate on the grounds referred to in point (e) of paragraph 1 shall immediately inform both the approval authority that granted the type-approval and the Commission.

The information to be provided shall specify at least:

(a) the date of termination of the mandate;

(b) the date until which the outgoing manufacturer's representative may be indicated in the information supplied by the manufacturer, including any promotional material;

(c) the transfer of documents, including confidentiality aspects and property rights;

(d) the obligation of the outgoing manufacturer's representative after the end of the mandate to forward to the manufacturer or incoming manufacturer's representative any complaints or reports about risks and suspected incidents relating to a vehicle, system, component, separate technical unit, part or equipment for which the outgoing manufacturer's representative had been designated as manufacturer's representative.

Article 16

Obligations of importers

1. Importers shall only place on the market vehicles, systems, components or separate technical units that comply with this Regulation.

2. Before placing on the market a type-approved vehicle, system, component or separate technical unit, importers shall verify that it is covered by a valid EU type-approval certificate and that the system, component or separate technical unit bears the required type-approval mark and complies with Article 13(8).

In the case of a vehicle, the importer shall ensure that the vehicle is accompanied by the required certificate of conformity.

3. Where a vehicle, system, component or separate technical unit is not in conformity with the requirements of this Regulation, and in particular where it does not correspond to its type-approval, importers shall not place on the market, allow to enter into service or register the vehicle, system, component or separate technical unit, until it has been brought into conformity.

▼B

4. Where a vehicle, system, component, separate technical unit, part or equipment presents a serious risk, importers shall inform the manufacturer and the market surveillance authorities thereof. For type-approved vehicles, systems, components and separate technical units, importers shall also inform the approval authority that granted the type-approval.

5. Importers shall indicate their name, registered trade name or registered trade mark, and their contact address on the vehicle, component, separate technical unit, part or equipment, or, where this is not possible, on its packaging or in a document accompanying the component, separate technical unit, part or equipment.

6. Importers shall ensure that the vehicle, system, component or separate technical unit is accompanied by instructions and information, as required by Article 59, in the official language or languages of the Member States concerned.

7. To protect the health and safety of consumers, importers shall keep a record of complaints and recalls relating to vehicles, systems, components, separate technical units, parts or equipment that they have placed on the market, and shall keep their distributors informed of such complaints and recalls.

8. Importers shall immediately inform the relevant manufacturer of any complaints they received regarding risks, suspected incidents or non-compliance issues relating to vehicles, systems, components, separate technical units, parts or equipment that they have placed on the market.

9. Importers shall ensure that, while a vehicle, system, component or separate technical unit is under their responsibility, storage or transport conditions do not jeopardise its compliance with the requirements laid down in this Regulation.

Article 17

Obligations of importers concerning their vehicles, systems, components, separate technical units, parts and equipment that are not in conformity or that present a serious risk

1. Where a vehicle, system, component, separate technical unit, part or equipment that has been placed on the market by importers is not in conformity with this Regulation, importers shall immediately take the corrective measures necessary to bring that vehicle, system, component, separate technical unit, part or equipment into conformity under the manufacturer's supervision, to withdraw it from the market or to recall it, as appropriate. Importers shall also inform the manufacturer and the approval authority that granted the EU type-approval.

2. Where a vehicle, system, component, separate technical unit, part or equipment that has been placed on the market presents a serious risk, importers shall immediately provide detailed information on the serious risk to the manufacturers and the approval authorities and market surveillance authorities.

▼B

Importers shall also inform the approval authorities and market surveillance authorities of any action taken and give details, in particular of the serious risk and of any measure taken by the manufacturer.

3. Importers shall, for a period of 10 years after the end of the validity of EU type-approval of a vehicle and for a period of five years after the end of the validity of the EU type-approval of a system, component or separate technical unit, keep a copy of the EU type-approval certificate and its attachments referred to in Article 28(1), and shall ensure that they can be made available to the approval authorities and market surveillance authorities upon request.

4. Importers shall, following a reasoned request from a national authority, provide that authority with all information and documentation necessary to demonstrate the conformity of a vehicle, system, component or separate technical unit, in a language that can be easily understood by that authority.

Importers shall, following a reasoned request from a national authority, cooperate with that authority on any action taken in accordance with Article 20 of Regulation (EC) No 765/2008 to eliminate the risks posed by the vehicle, system, component, separate technical unit, part or equipment that they have made available on the market.

Article 18

Obligations of distributors

1. Distributors shall verify, before making available on the market a vehicle, system, component or separate technical unit, that the vehicle, system, component or separate technical unit bears the required statutory plate or type-approval mark, that it is accompanied by the required documents and by instructions and safety information, as required by Article 59, in the official language or languages of the relevant Member State, and that the manufacturer and the importer have complied with the requirements set out in Article 13(8) and Article 16(5) respectively.

2. Distributors shall immediately inform the relevant manufacturer of any complaints they received relating to risks, suspected incidents or non-compliance issues with vehicles, systems, components, separate technical units, parts or equipment that they have made available on the market.

3. Distributors shall ensure that, while a vehicle, system, component or separate technical unit is under their responsibility, storage or transport conditions do not jeopardise its compliance with the requirements laid down in this Regulation.

▼B

Article 19

Obligations of distributors concerning their vehicles, systems, components, separate technical units, parts and equipment that are not in conformity or that present a serious risk

1. Where a vehicle, system, component, separate technical unit, part or equipment is not in conformity with the requirements of this Regulation, distributors shall inform the manufacturer, the importer and the approval authority that granted the EU type-approval in respect thereof, and shall not make available on the market the vehicle, system, component, separate technical unit, part or equipment until it has been brought into conformity.

2. Where a vehicle, system, component, separate technical unit, part or equipment that distributors have made available on the market is not in conformity with this Regulation, they shall inform the manufacturer, the importer and the approval authority that granted the EU type-approval.

3. Where a vehicle, system, component, separate technical unit, part or equipment presents a serious risk, distributors shall immediately provide detailed information on that serious risk to the manufacturer, the importer and the approval authorities and the market surveillance authorities of the Member States in which that vehicle, system, component, separate technical unit, part or equipment has been made available on the market.

Distributors shall also inform them of any action taken and give details of any measure taken by the manufacturer.

4. Distributors shall, following a reasoned request from a national authority, cooperate with that authority on any action taken in accordance with Article 20 of Regulation (EC) No 765/2008 to eliminate the risks posed by the vehicle, system, component, separate technical unit, part or equipment that they have made available on the market.

Article 20

Cases in which obligations of manufacturers apply to importers and distributors

An importer or distributor shall be considered a manufacturer for the purposes of this Regulation, and shall be subject to the obligations of the manufacturer under Articles 8, 13 and 14, in the following cases:

(a) where the importer or distributor makes available on the market, or is responsible for the entry into service of a vehicle, system, component or separate technical unit under its name or trademark, or modifies a vehicle, system, component or separate technical unit in such a way that the vehicle, system, component or separate technical unit may no longer comply with the applicable requirements; or

(b) where the importer or distributor makes available on the market or is responsible for the entry into service of a system, component or separate technical unit on the basis of a UN type-approval that was granted to a manufacturer outside the Union, and it is not possible to identify a manufacturer's representative in the territory of the Union.

▼B

Article 21

Identification of economic operators

Upon a request of an approval authority or a market surveillance authority, for a period of 10 years after the placing on the market of a vehicle and for a period of five years after the placing on the market of a system, component, separate technical unit, part or equipment, economic operators shall provide information on the following:

(a) the identity of any economic operator that has supplied them with a vehicle, system, component, separate technical unit, part or equipment;

(b) the identity of any economic operator to which they have supplied a vehicle, system, component, separate technical unit, part or equipment.

CHAPTER III

PROCEDURES FOR EU TYPE-APPROVAL

Article 22

Procedures for EU type-approval

1. Where applying for a whole-vehicle type-approval, the manufacturer may choose one of the following procedures:

(a) step-by-step type-approval;

(b) single-step type-approval;

(c) mixed type-approval.

In addition, the manufacturer may choose a multi-stage type-approval for an incomplete or completed vehicle.

2. Without prejudice to the requirements of the regulatory acts listed in Annex II, for system type-approval, component type-approval and separate technical unit type-approval only the single-step type-approval is applicable.

3. Multi-stage type-approval shall be granted in respect of an incomplete or completed type of vehicle that, having regard to the state of completion of the vehicle, conforms to the particulars in the information folder referred to in Article 24 and that meets the technical requirements laid down in the relevant regulatory acts listed in Annex II.

Multi-stage type-approval shall also apply to complete vehicles that have been converted or modified by another manufacturer after their completion.

▼B

4. The EU type-approval for the final stage of completion shall only be granted after the approval authority has verified, in accordance with the procedures laid down in Annex IX, that the type of vehicle approved at the final stage meets all applicable technical requirements at the time of the approval. Verification shall include a documentary check of all requirements covered by an EU type-approval for an incomplete type of vehicle granted in the course of a multi-stage procedure, including where the EU type-approval was granted for a different category of vehicle.

5. The choice of the procedure for EU type-approval referred to in paragraph 1 shall not affect the applicable requirements with which the approved type of vehicle has to comply at the time of granting of the whole-vehicle type-approval.

6. Multi-stage type-approval may also be used by a single manufacturer, provided it is not used to circumvent the requirements applicable to vehicles built in a single stage. Vehicles built by a single manufacturer are not considered to have been built in multiple stages for the purposes of Articles 41, 42 and 49.

Article 23

Application for EU type-approval

1. The manufacturer shall submit to the approval authority an application for EU type-approval and the information folder referred to in Article 24.

2. Only one application shall be submitted in respect of a particular type of vehicle, system, component or separate technical unit. That single application shall be submitted in only one Member State and to only one approval authority therein.

A new application may not be submitted in another Member State in respect of the same type of vehicle, system, component or separate technical unit where:

(a) an approval authority has refused to grant a type-approval of that type;

(b) an approval authority has withdrawn type-approval of that type; or

(c) the manufacturer has revoked an application for a type-approval of that type.

The approval authority shall reject an application for a type-approval of a different type designation or of a modification with respect to a previous application where the changes are not sufficient to constitute a new type of vehicle, system, component or separate technical unit.

3. An application for an EU type-approval of a particular type of vehicle, system, component or separate technical unit shall include a declaration by the manufacturer certifying, in accordance with the second subparagraph of paragraph 2 that:

▼B

(a) the manufacturer has not applied for an EU type-approval for the same type to any other approval authority, and no other approval authority granted the manufacturer such an approval;

(b) no approval authority has refused to grant type-approval of that type;

(c) no approval authority has withdrawn type-approval of that type; and

(d) the manufacturer has not revoked an application for a type-approval of that type.

4. A separate application shall be submitted for each type of vehicle, system, component or separate technical unit to be approved.

Article 24

Information folder

1. The information folder shall include the following:

(a) an information document, in accordance with the template laid down in the implementing acts referred to in paragraph 4, for single-step type-approval or mixed whole-vehicle type-approval or for step-by-step whole-vehicle type-approval or, in the case of the type-approval of a system, component or separate technical unit, in accordance with the relevant regulatory act listed in Annex II;

(b) all data, drawings, photographs and other relevant information;

(c) for vehicles, an indication of the procedure or procedures chosen in accordance with Article 22(1);

(d) any additional information requested by the approval authority in the context of the EU type-approval procedure.

2. The information document referred to in point (a) of paragraph 1 for whole-vehicle type-approval shall contain a complete set of information on the characteristics of the type of vehicle that is necessary for the approval authority to identify the type of vehicle and to properly conduct the type-approval procedure.

3. The manufacturer shall submit the information folder to the approval authority in an electronic format that is acceptable to that authority. The approval authority may also accept the information folders that are submitted in paper format.

4. The Commission shall adopt implementing acts laying down the template for the information document and any other part of the information folder, and a harmonised electronic format for the purposes of paragraph 3 of this Article. Those implementing acts shall be adopted in accordance with the examination procedure referred to in Article 83(2). The first such implementing act shall be adopted by 5 July 2020.

▼B

Article 25

Additional information to be provided with an application for EU type-approval

1. An application for a step-by-step type-approval shall be accompanied, in addition to the information folder referred to in Article 24, by the complete set of EU type-approval certificates or UN type-approval certificates, and their attachments, that are required pursuant to the regulatory acts listed in Annex II.

In the case of a system type-approval, a component type-approval or a separate technical unit type-approval, pursuant to the regulatory acts listed in Annex II, the approval authority shall have access to the information folder and, if applicable, the EU type-approval certificates and their attachments until the whole-vehicle type-approval is either granted or refused.

2. An application for a mixed type-approval shall be accompanied, in addition to the information folder referred to in Article 24, by the EU type-approval certificates or UN type-approval certificates, and their attachments, that are required pursuant to the regulatory acts listed in Annex II.

For systems for which no EU type-approval certificate or UN type-approval certificate has been presented, the application shall be accompanied, in addition to the information folder referred to in Article 24, by the information required for the approval of those systems during the vehicle approval phase, and by a test report instead of the EU type-approval certificate or UN type-approval certificate.

3. An application for a multi-stage type-approval shall be accompanied by the following information:

(a) in the first stage, by those parts of the information folder and the EU type-approval certificates, UN type-approval certificates or, if applicable, the test reports, that are relevant to the state of completion of the base vehicle;

(b) in the second and subsequent stages, by those parts of the information folder and the EU type-approval certificates or UN type-approval certificates that are relevant to the current stage of completion, together with a copy of the EU whole-vehicle type-approval certificate that was issued at the preceding stage of construction, as well as full details of any changes or additions that the manufacturer has made to the vehicle.

The information specified in this paragraph shall be supplied in accordance with Article 24(3).

4. The approval authority and technical services shall have the access to the software and algorithms of the vehicle that they consider to be necessary for the purpose of carrying out their activities.

▼B

The approval authority and technical services may also require the manufacturer to supply documentation or any additional information needed to allow the approval authority or technical services to develop an appropriate level of understanding of the systems, including the system development process and the system concept, as well as the functions of software and algorithms that are necessary to verify compliance with the requirements of this Regulation, to take a decision on which tests are required or to facilitate the execution of those tests.

CHAPTER IV

CONDUCT OF PROCEDURES FOR EU TYPE-APPROVAL

Article 26

General provisions on conduct of procedures for EU type-approval

1. For each type of vehicle, system, component or separate technical unit, only one EU type-approval may be granted.

2. An approval authority, having received an application in accordance with Article 23, shall only grant an EU type-approval after having verified all of the following:

(a) the conformity of production arrangements referred to in Article 31;

(b) that the declaration referred to in Article 23(3) has been submitted;

(c) the compliance of the type of vehicle, system, component or separate technical unit with the applicable requirements;

(d) in the case of whole-vehicle type-approvals in accordance with the step-by-step, mixed or multi-stage type-approval procedures, the approval authority shall verify, in accordance with Article 22(4), that the systems, components and separate technical units are covered by separate and valid type-approvals that have been granted pursuant to the requirements applicable at the time of the granting of the whole-vehicle type-approval.

3. The procedures with respect to EU type-approval, that are set out in Annex III, and the procedures with respect to multi-stage type-approval, set out in Annex IX, shall apply.

The Commission is empowered to adopt delegated acts in accordance with Article 82, amending Annexes III and IX to take into account regulatory and technological developments by updating the procedures therein with respect to EU type-approval and multi-stage type-approval.

▼B

4. The approval authority shall put together an information package consisting of the information folder referred to in Article 24, accompanied by the test reports and all other documents that were added to the information folder by the technical service or by the approval authority while carrying out their tasks.

The information package may be kept electronically. It shall contain an index that clearly indicates all of the pages and the format of each document, and that chronologically records any changes to the EU type-approval.

The approval authority shall keep the information package available for a period of 10 years after the end of the validity of the EU type-approval concerned.

5. The approval authority shall refuse to grant an EU type-approval where it finds that a type of vehicle, system, component or separate technical unit that complies with the applicable requirements nonetheless presents a serious risk to safety or may seriously harm the environment or public health. In such case, it shall immediately send to the approval authorities of the other Member States and to the Commission a detailed file explaining the reasons for its decision and setting out the evidence for its findings.

6. In accordance with Article 22(4), in the case of step-by-step, mixed and multi-stage type-approval procedures, the approval authority shall refuse to grant an EU type-approval where it finds that systems, components or separate technical units do not comply with the requirements set out in this Regulation.

The approval authority shall ask the approval authorities that granted type-approvals for the systems, components, or separate technical units, to act in accordance with Article 54(2).

Article 27

Notification of EU type-approval granted, amended, refused and withdrawn

1. The approval authority shall, when issuing or amending the EU type-approval certificate, make available to the approval authorities of the other Member States, to the market surveillance authorities, and to the Commission, a copy of the EU type-approval certificate for each type of vehicle, system, component and separate technical unit for which it has granted a type-approval and its attachments, including the test reports referred to in Article 30. That copy shall be made available by means of the common secure electronic exchange system in accordance with the implementing acts referred to in paragraph 3 of this Article.

2. The approval authority shall without delay inform the approval authorities of the other Member States and the Commission of its refusal or withdrawal of any EU type-approval, stating the reasons for its decision, by means of the common secure electronic exchange system in accordance with the implementing acts referred to in paragraph 3.

▼B

3. As regards the common secure electronic exchange system, the Commission shall adopt implementing acts laying down the format of the electronic documents that are to be made available, the exchange mechanism, the procedures to inform authorities on the granting of EU type-approvals, on amendments, refusals and withdrawals thereof and on the relevant security measures. Those implementing acts shall be adopted in accordance with the examination procedure referred to in Article 83(2). The first such implementing act shall be adopted by 5 July 2020.

Article 28

EU type-approval certificate

1. The EU type-approval certificate shall contain the following attachments:

(a) the information package referred to in Article 26(4);

(b) the test reports referred to in Article 30 in the case of a system, component or separate technical unit type-approval, or the test results sheet in the case of whole-vehicle type-approval;

(c) in the case of the whole-vehicle type-approval, the name and the specimen of the signature of the person or persons authorised to sign the certificates of conformity and a statement of their position in the company;

(d) in the case of the whole-vehicle type-approval, a filled-out specimen of the certificate of conformity of the vehicle type.

2. The EU type-approval certificate shall be given a unique number in accordance with a harmonised numbering system, which shall at least allow for the identification of the Member State which granted the EU type-approval and for the identification of the requirements to which the type of vehicle, system, component or separate technical unit conforms.

3. The Commission shall adopt implementing acts laying down the templates for the EU type-approval certificate, the harmonised numbering system, and the test result sheet, respectively, including providing the relevant electronic formats. Those implementing acts shall be adopted in accordance with the examination procedure referred to in Article 83(2). The first such implementing act shall be adopted by 5 July 2020.

4. In respect of each type of vehicle, system, component and separate technical unit, the approval authority shall:

(a) complete all the relevant sections of the EU type-approval certificate, including its attachments;

(b) compile the index to the information package as referred to in Article 26(4);

▼B

(c) issue the completed EU type-approval certificate and its attachments to the manufacturer without delay.

5. In the case of an EU type-approval, the validity of which has been restricted in accordance with Article 39, Article 43 or Part III of Annex II, or in relation to which certain provisions of this Regulation or of the regulatory acts listed in Annex II do not apply, the EU type-approval certificate shall specify those restrictions or the relevant provisions that do not apply.

6. Where a manufacturer of a vehicle chooses the mixed type-approval procedure, the approval authority shall complete the information package as referred to in Article 26(4) with the references to the test reports referred to in Article 30 for the systems, components or separate technical units for which no EU type-approval certificate has been issued. The approval authority shall also clearly identify in the information package the technical requirements of the regulatory acts listed in Annex II against which the vehicle was tested.

7. Where a manufacturer of a vehicle chooses the single-step type-approval procedure, the approval authority shall attach to the EU type-approval certificate a list of relevant regulatory acts in accordance with the template provided in the implementing acts referred to in paragraph 3.

Article 29

Specific provisions concerning EU type-approvals for systems, components and separate technical units

1. An EU type-approval shall be granted in respect of a system, component or separate technical unit that conforms to the particulars in the information folder referred to in Article 24 and that meets the technical requirements laid down in the relevant regulatory acts listed in Annex II.

2. Where components or separate technical units, whether or not intended for repair, servicing or maintenance, are also covered by a system type-approval with respect to a vehicle, no additional component or separate technical unit type-approval shall be required unless such type-approval is provided for under the relevant regulatory acts listed in Annex II.

3. Where a component or separate technical unit fulfils its function or offers a specific feature only in conjunction with other parts of the vehicle, thereby making it possible to verify compliance only where the component or separate technical unit operates in conjunction with those other vehicle parts, the scope of the EU type-approval of the component or the separate technical unit shall be restricted accordingly.

▼B

In such cases, the EU type-approval certificate shall specify any restrictions on the use of the component or the separate technical unit, and shall indicate the special conditions for fitting that component or separate technical unit in a vehicle.

Where that component or separate technical unit is fitted in a vehicle, the approval authority shall verify, at the time of the approval of the vehicle, that the component or separate technical unit complies with all applicable restrictions on the use or conditions for fitting.

Article 30

Tests required for EU type-approval

1. For the purpose of granting EU type-approvals, the approval authority shall verify compliance with the technical requirements of this Regulation by means of appropriate tests that are performed by its technical services.

2. The fundamental elements of the tests, including the technical requirements for which compliance was verified by the tests, shall be recorded in a test report.

3. The Commission shall adopt implementing acts laying down the format of the test reports. Those implementing acts shall be adopted in accordance with the examination procedure referred to in Article 83(2). The first such implementing act shall be adopted by 5 July 2020.

4. The manufacturer shall make available to the approval authorities and provide to the technical services concerned the vehicles, systems, components or separate technical units that are required under the relevant regulatory acts listed in Annex II for the performance of the required tests.

5. The required tests shall be performed on vehicles, systems, components and separate technical units that are representative of the type to be approved.

6. Where a range of values is provided for the parameters and for the conditions used for the performance of the appropriate tests referred to in paragraph 1, the technical services may choose any value within that range.

7. At the request of the manufacturer, and subject to the agreement of the approval authority, virtual testing methods may be used in accordance with Annex VIII as alternatives to the tests referred to in paragraph 1.

8. The Commission is empowered to adopt delegated acts in accordance with Article 82, amending Annex VIII to take into account technical and regulatory developments by updating the list of regulatory acts in respect of which virtual testing methods may be used by a manufacturer or a technical service and the specific conditions under which those virtual testing methods are to be used.

▼B

Article 31

Conformity of production arrangements

1. An approval authority that has granted an EU type-approval shall take the necessary measures in accordance with Annex IV to verify, if necessary in cooperation with the approval authorities of the other Member States, that the manufacturer produces the vehicles, systems, components or separate technical units in conformity with the approved type.

2. An approval authority that has granted a whole-vehicle type-approval shall verify a statistically relevant number of samples of vehicles and certificates of conformity on their compliance with Articles 36 and 37 and shall verify that the data in those certificates of conformity are correct.

3. An approval authority that has granted an EU type-approval shall take the necessary measures to verify, if necessary in cooperation with the approval authorities of the other Member States, that the arrangements referred to in paragraphs 1 and 2 of this Article continue to be adequate so that vehicles, systems, components or separate technical units in production continue to conform to the approved type and that certificates of conformity continue to comply with Articles 36 and 37.

4. In order to verify that a vehicle, system, component or separate technical unit conforms to the approved type, the approval authority that granted the EU type-approval shall take the necessary measures to carry out the checks or tests on samples taken at the manufacturer's premises, including production facilities that are required for EU type-approval.

In accordance with Annex IV, the approval authority shall take the necessary measures to carry out such checks or tests with the frequency set out in the regulatory acts listed in Annex II, or, if no frequency is specified in those acts, at least once every three years.

5. In order to verify that a vehicle, system, component or separate technical unit conforms to the approved type, the approval authority or the technical services shall:

(a) if a range of values is provided for in the test procedures laid down in the relevant regulatory acts listed in Annex II, set the values in a random manner within the provided range when carrying out checks or tests; and

(b) have access to the software, algorithms, documentation and any additional information in accordance with Article 25(4).

6. An approval authority that has granted an EU type-approval shall take the necessary measures to verify that the manufacturer complies with the obligations set out in Chapter XIV. It shall verify in particular whether, in order to comply with those obligations, the manufacturer has amended or supplemented the vehicle OBD information and vehicle repair and maintenance information.

▼B

7. Where an approval authority that has granted an EU type-approval establishes that the manufacturer no longer produces the vehicles, systems, components or separate technical units in conformity with the approved type or with the requirements of this Regulation, or establishes that the certificates of conformity no longer comply with Articles 36 and 37, even though production is continued, it shall take the necessary measures to ensure that the arrangements for conformity of production are followed correctly or withdraw the type-approval. The approval authority may decide to take all necessary restrictive measures in accordance with Chapter XI.

8. The Commission is empowered to adopt delegated acts in accordance with Article 82, amending Annex IV to take account of technological and regulatory developments by updating the conformity of production procedures.

Article 32

Fees

1. The fees for EU type-approval activities shall be levied on the manufacturers who have applied for EU type-approval in the Member State concerned.

The Member State shall ensure that sufficient resources are available to cover the costs for market surveillance activities. Without prejudice to national law, those costs may be recovered by fees that can be levied by the Member State in which the vehicles are placed on the market.

2. The Member States may levy administrative fees on technical services applying to be designated to cover wholly or partly the costs relating to the activities exercised by the national authorities responsible for technical services in accordance with this Regulation.

CHAPTER V

AMENDMENTS TO AND VALIDITY OF EU TYPE-APPROVALS

Article 33

General provisions on amendments of EU type-approvals

1. The manufacturer shall inform the approval authority that granted the EU type-approval without delay of any change in the particulars recorded in the information package referred to in Article 26(4), including any change in the extended documentation package under the regulatory acts listed in Annex II.

The approval authority shall decide whether that change requires an amendment, in the form of either a revision or an extension of the EU type-approval in accordance with Article 34, or whether that change requires a new EU type-approval.

▼B

2. An application for an amendment shall only be submitted to the approval authority that granted the existing EU type-approval.

3. Where an approval authority finds that an amendment requires the repetition of inspections or tests, it shall inform the manufacturer accordingly.

4. Where an approval authority finds on the basis of the inspections or tests referred to in paragraph 3 of this Article that the requirements for the EU type-approval continue to be fulfilled, the procedures referred to in Article 34 shall apply.

5. Where the approval authority finds that the changes in the particulars recorded in the information package cannot be covered by an extension of the existing type-approval, it shall refuse to amend the EU type-approval and shall request the manufacturer to apply for a new EU type-approval.

Article 34

Revisions and extensions of EU type-approvals

1. An amendment shall be designated a ‘revision’ where an approval authority finds that, despite the change in the particulars recorded in the information package referred to in Article 26(4), the concerned type of vehicle, system, component or separate technical unit continues to comply with the applicable requirements for that type and that, therefore, no inspections or tests need to be repeated.

In such case, the approval authority shall issue the revised pages of the information package as necessary and without delay, marking each revised page to show clearly the nature of the change and the date of reissue, or it shall issue a consolidated, updated version of the information package, accompanied by a detailed description of the changes.

2. The amendment shall be designated an ‘extension’ where the approval authority finds that the particulars recorded in the information package have changed, and where any of the following apply:

(a) further inspections or tests are required to verify continued compliance with the requirements upon which the existing EU type-approval has been based;

(b) any information on the EU type-approval certificate, except for its attachments, has changed; or

(c) new requirements under any regulatory act listed in Annex II become applicable to the approved type of vehicle, system, component or separate technical unit.

▼B

In the event of an extension, the approval authority shall issue an updated EU type-approval certificate without delay, which shall be denoted by an extension number that is incremented in accordance with the number of successive extensions already granted. That approval certificate shall clearly state the reason for the extension, the date of reissue and, where relevant, the period of validity.

3. Whenever amended pages of the information package or a consolidated, updated version of the information package are issued, the index to the information package shall be amended accordingly to show the date of the most recent extension or revision, or the date of the most recent consolidation of the updated version.

4. No extension to the type-approval of a type of vehicle shall be required if the new requirements referred to in point (c) of paragraph 2 are, from a technical point of view, irrelevant to that type of vehicle or concern categories of vehicle other than the category to which it belongs.

Article 35

Termination of validity

1. Seven years after the latest update of the information package in case of an EU whole-vehicle type-approval certificate for vehicles of categories M_1 and N_1, and 10 years for vehicles of categories M_2, M_3, N_2, N_3 and O, the approval authority shall verify that the type of vehicle complies with all the regulatory acts that are relevant to that type.

Where the approval authority carries out the verification referred to in the first subparagraph of this paragraph, it is not necessary for the tests referred to in Article 30 to be repeated.

2. An EU type-approval shall become invalid in each of the following cases:

(a) where new requirements applicable to the approved type of vehicle, system, component or separate technical unit become mandatory for the making available on the market, registration or entry into service and the EU type-approval cannot be extended on the grounds laid down in point (c) of Article 34(2);

(b) where a verification carried out in accordance with paragraph 1 of this Article concludes that the vehicle does not comply with all the regulatory acts that are relevant to that type;

(c) where the production of vehicles in conformity with the approved type of vehicle is definitively discontinued on a voluntary basis, which shall be deemed to have occurred where no vehicle of the type concerned has been produced in the previous two years; however, such type-approvals shall continue to be valid for the purpose of registration or entry into service as long as point (a) of this paragraph is not applicable;

(d) where the EU type-approval has been withdrawn in accordance with Article 31(7);

▼B

(e) where the validity of the EU type-approval certificate expires due to a restriction referred to in Article 39(6);

(f) where the type-approval was found to be based on false declarations, falsified test results or where data were withheld which would have led to the refusal to grant the type-approval.

3. Where the whole-vehicle type-approval of only one variant within a type of vehicle or one version within a variant becomes invalid, the whole-vehicle type-approval of the type of vehicle in question shall become invalid only in so far as the particular variant or version is concerned.

4. Where the production of a particular type of vehicle, system, component or separate technical unit is definitively discontinued, the manufacturer shall notify the approval authority that granted the EU type-approval without delay.

Within one month of receiving the notification referred to in the first subparagraph, the approval authority that granted the EU type-approval for the type of vehicle, system, component, or separate technical unit, shall inform the approval authorities of the other Member States accordingly.

5. Where an EU type-approval certificate is due to become invalid, the manufacturer shall notify the approval authority that granted the EU type-approval without delay.

6. Upon receiving the notification from the manufacturer, the approval authority that granted the EU type-approval shall communicate to the approval authorities of the other Member States and the Commission without delay all relevant information for the making available on the market, registering or entering into service of vehicles, systems, components or separate technical units, as appropriate.

In the case of vehicles, the communication referred to in the first subparagraph of this paragraph shall specify the date of manufacture and the vehicle identification number (‘VIN’), as defined in point (2) of Article 2 of Commission Regulation (EU) No 19/2011 ([1]), of the last vehicle produced.

([1]) Commission Regulation (EU) 19/2011 of 11 January 2011 concerning type-approval requirements for the manufacturer's statutory plate and for the vehicle identification number of motor vehicles and their trailers and implementing Regulation (EC) No 661/2009 of the European Parliament and of the Council concerning type-approval requirements for the general safety of motor vehicles, their trailers and systems, components and separate technical units intended therefor (OJ L 8, 12.1.2011, p. 1).

▼B

CHAPTER VI

CERTIFICATE OF CONFORMITY AND MARKINGS

Article 36

Certificate of conformity in paper format

1. The manufacturer shall issue a certificate of conformity in paper format to accompany each vehicle, whether complete, incomplete or completed, that is manufactured in conformity with the approved type of vehicle. For that purpose, the manufacturer shall use the template set out in the implementing acts referred to in paragraph 4.

The certificate of conformity in paper format shall describe the main characteristics of the vehicle, as well as its technical performance in concrete terms. The certificate of conformity in paper format shall include the date of manufacture of the vehicle. The certificate of conformity in paper format shall be designed in such a way as to prevent forgery.

The certificate of conformity in paper format shall be delivered free of charge to the buyer, together with the vehicle. Its delivery may not be made dependent on an explicit request or on the submission of additional information to the manufacturer.

2. From 5 July 2026, the manufacturer shall be exempted from the obligation in paragraph 1 of this Article to issue the certificate of conformity in paper format to accompany each vehicle, where the manufacturer makes the certificate of conformity available as structured data in electronic format in accordance with the Article 37(1).

3. For a period of 10 years after the date of manufacture of the vehicle, the manufacturer shall, at the request of the vehicle owner, issue a duplicate of the certificate of conformity in paper format in return for a payment that does not exceed the cost of issuing the duplicate certificate. The word ‘duplicate’ shall be clearly visible on the face of any duplicate certificate.

4. The Commission shall adopt implementing acts concerning the certificate of conformity in paper format, setting out, in particular:

(a) the template for the certificate of conformity;

(b) the security elements to prevent forgery of the certificate of conformity; and

(c) the specification concerning the manner of signing of the certificate of conformity.

Those implementing acts shall be adopted in accordance with the examination procedure referred to in Article 83(2). The first such implementing act shall be adopted before 1 September 2020.

5. The certificate of conformity in paper format shall be drawn up in at least one of the official languages of the Union.

▼B

6. The person or persons authorised to sign certificates of conformity in paper format shall be employed by the manufacturer, and shall be duly authorised to engage the legal responsibility of the manufacturer with respect to the design and the construction of the vehicle or to the conformity of its production.

7. The certificate of conformity in paper format shall be completed in its entirety and shall not contain restrictions as regards the use of the vehicle other than those provided for in this Regulation or in any of the regulatory acts listed in Annex II.

8. In the case of an incomplete base vehicle, the manufacturer shall only fill in those fields of the certificate of conformity in paper format that are relevant in view of the state of completeness of the vehicle.

9. In the case of an incomplete or completed vehicle, the manufacturer shall only fill in those fields of the certificate of conformity in paper format that concern the additions or changes carried out at the current stage of approval and, where applicable, shall attach all certificates of conformity in paper format that were delivered at the previous stages.

Article 37

Certificate of conformity in electronic format

1. Without prejudice to Article 36(1), from 5 July 2026, the manufacturer shall, free of charge and without undue delay after the date of manufacture of the vehicle, make the certificate of conformity available to the approval authority that has granted the whole-vehicle type-approval as structured data in electronic format in accordance with the implementing acts referred to in paragraph 8 of this Article.

2. Without prejudice to Article 36(1), any manufacturer may make available certificates of conformity in accordance with paragraph 1 of this Article before 5 July 2026.

3. The approval authority shall make available the certificate of conformity as structured data in electronic format in accordance with the implementing acts referred to in paragraph 8, so that the certificate of conformity can be accessed by the approval authorities, market surveillance authorities and registration authorities of the Member States and by the Commission.

4. Member States may exempt manufacturers from the obligation set out in paragraph 1 of this Article with respect to types of vehicles which have national small series vehicle type-approval, in accordance with Article 42.

5. The approval authority receiving the certificate of conformity as structured data in electronic format in accordance with the implementing acts referred to in paragraph 8 of this Article, shall give read-only access to the certificate of conformity as laid down in Article 12(2). In the case of vehicles built in multiple stages such access shall be given to the manufacturer of the subsequent stage.

▼B

6. All data exchange in accordance with this Article shall be performed by means of secure data exchange protocols.

7. Member States shall establish the organisation and structure of their data network to enable data reception of the certificates of conformity as structured data in electronic format in accordance with the implementing acts referred to in paragraph 8 as from 1 September 2025, preferably by making use of existing systems for the exchange of structured data.

8. Taking into account the data that are required to be provided on the certificate of conformity in paper format, the Commission shall adopt implementing acts concerning certificates of conformity as structured data in electronic format setting out, in particular:

(a) the basic format and structure of the data elements of the certificates of conformity in electronic format and the messages used in the exchange;

(b) minimum requirements for secure data exchange, including the prevention of data corruption and data misuse, and measures to guarantee the authenticity of the electronic data, such as the use of digital signature;

(c) the means of exchange of the data of the certificate of conformity in electronic format;

(d) the minimum requirements for a vehicle-specific unique identifier and the form of information for the buyer in accordance with paragraph 5;

(e) the read-only access referred to in paragraph 5;

(f) exemptions for manufacturers of particular vehicle categories and types of vehicle that are produced in small series.

Those implementing acts shall be adopted in accordance with the examination procedure referred to in Article 83(2). The first such implementing act shall be adopted before 1 September 2020.

9. Member States shall be able to exchange certificates of conformity in electronic format in accordance with this Article with the other Member States at the latest from 5 July 2026.

10. From 5 July 2026, where, in exceptional cases, a national authority so requests, the manufacturer shall issue a duplicate of the certificate of conformity in paper format.

Article 38

Manufacturer's statutory and additional plates, markings and type-approval mark of components and separate technical units

1. The manufacturer of a vehicle shall affix to every vehicle manufactured in conformity with the approved type a statutory plate, where relevant additional plates, and indications or symbols, with the markings required under this Regulation and the relevant regulatory acts listed in Annex II.

▼B

2. The manufacturer of a component or separate technical unit shall affix to every component and separate technical unit manufactured in conformity with the approved type, whether or not it is part of a system, the type-approval mark required by the relevant regulatory acts listed in Annex II.

Where no such type-approval mark is required, the manufacturer shall affix at least the trade name or trade mark of the manufacturer, as well as the type number or an identification number, to the component or separate technical unit.

3. The Commission shall adopt implementing acts laying down the model for the EU type-approval mark. Those implementing acts shall be adopted in accordance with the examination procedure referred to in Article 83(2). The first such implementing act shall be adopted by 5 July 2020.

4. Economic operators shall only place on the market or make available on the market vehicles, components and separate technical units which are marked in compliance with this Regulation.

CHAPTER VII

NEW TECHNOLOGIES OR NEW CONCEPTS

Article 39

Exemptions for new technologies or new concepts

1. The manufacturer may apply for an EU type-approval in respect of a type of vehicle, system, component or separate technical unit that incorporates new technologies or new concepts that are incompatible with one or more regulatory acts listed in Annex II.

2. The approval authority shall grant the EU type-approval referred to in paragraph 1 where all of the following conditions are met:

(a) the application for the EU type-approval states the reasons why the new technologies or new concepts make the vehicles, systems, components or separate technical units incompatible with one or more regulatory acts listed in Annex II;

(b) the application for the EU type-approval describes the safety and environmental implications of the new technology or new concept and the measures taken in order to ensure at least an equivalent level of safety and environmental protection to that provided by the requirements in respect of which an exemption is sought;

(c) test descriptions and results are presented proving that the condition in point (b) is met.

3. The granting of EU type-approvals exempting new technologies or new concepts shall be subject to the authorisation by the Commission.

▼B

The Commission shall adopt implementing acts to decide whether to grant the authorisation referred to in the first subparagraph of this paragraph. Those implementing acts shall be adopted in accordance with the examination procedure referred to in Article 83(2).

4. Pending adoption of implementing acts referred to in paragraph 3, the approval authority may grant a provisional EU type-approval, valid only in the territory of the Member State of that approval authority, in respect of a type of vehicle covered by the exemption sought. The approval authority shall inform the Commission and the other Member States thereof without delay by means of a file containing the information referred to in paragraph 2.

The provisional nature and the limited territorial validity of the EU type-approval shall be apparent from the heading of the EU type-approval certificate and the heading of the certificate of conformity.

5. Approval authorities of other Member States may accept the provisional EU type-approval referred to in paragraph 4 within their territory, provided they inform the approval authority that granted the provisional EU type-approval of their acceptance in writing.

6. Where appropriate, the implementing acts referred to in paragraph 3 shall specify whether authorisations are subject to any restrictions, in particular with regard to the maximum number of vehicles covered. In all cases, the EU type-approval shall be valid for at least 36 months.

7. Where the Commission adopts implementing acts referred to in paragraph 3 to refuse to grant the authorisations, the approval authority shall immediately inform the holder of the provisional EU type-approval referred to in paragraph 4 that the provisional EU type-approval approval shall be revoked six months after the date of the implementing act.

However, vehicles that have been manufactured in conformity with the provisional EU type-approval before it ceased to be valid may be placed on the market, be registered or enter into service in any Member State that has accepted the provisional EU type-approval in accordance with paragraph 5.

Article 40

Subsequent adaptation of regulatory acts

1. Where the Commission has authorised the granting of an EU type-approval in accordance with Article 39, it shall immediately take the necessary steps to adapt the regulatory acts concerned to the latest technological developments.

Where the exemption under Article 39 relates to a UN Regulation, the Commission shall make proposals to amend the relevant UN Regulation in accordance with the procedure applicable under the Revised 1958 Agreement.

2. Once the relevant regulatory acts have been amended, any restriction in the implementing acts referred to in Article 39(3) shall be lifted.

▼B

3. Where the necessary steps to adapt the regulatory acts referred to in paragraph 1 of this Article have not been taken, the Commission may, at the request of the Member State that granted the provisional EU type-approval, adopt implementing acts to decide whether to grant the authorisation of the extension of the validity of the provisional EU type-approval. Those implementing acts shall be adopted in accordance with the examination procedure referred to in Article 83(2).

CHAPTER VIII

VEHICLES PRODUCED IN SMALL SERIES

Article 41

EU type-approval of vehicles produced in small series

1. At the request of the manufacturer and within the quantitative annual limits for vehicle categories M, N and O set out in point 1 of Part A of Annex V, Member States shall grant an EU type-approval for a type of vehicle produced in small series that satisfies at least the technical requirements laid down in Appendix 1 to Part I of Annex II.

2. Paragraph 1 shall not apply to special purpose vehicles.

3. The EU type-approval certificate for vehicles produced in small series shall be given a unique number in accordance with a harmonised numbering system, which shall at least allow for the identification of the Member State which granted the EU type-approval and for the identification of the requirements to which the type of vehicle, system, component or separate technical unit conforms.

4. The Commission shall adopt implementing acts laying down the template and the numbering system for EU type-approval certificates for vehicles produced in small series. Those implementing acts shall be adopted in accordance with the examination procedure referred to in Article 83(2).

5. The Commission is empowered to adopt delegated acts in accordance with Article 82, amending Appendix 1 of Part I to Annex II to set out the technical requirements for vehicle categories M, N and O and amending point 1 of Part A of Annex V accordingly as regards the quantitative annual limits.

Article 42

National type-approval of vehicles produced in small series

1. Manufacturers may apply for a national type-approval of vehicles produced in small series within the quantitative annual limits set out in point 2 of Part A of Annex V. Those limits shall apply to the making available on the market, the registration or the entry into service of vehicles of the approved type in the market of each Member State in a given year.

▼B

2. Member States may decide to exempt any type of vehicle referred to in paragraph 1 from the obligation to comply with one or more of the requirements of this Regulation or with one or more of the requirements laid down in the regulatory acts listed in Annex II, provided that those Member States have laid down relevant alternative requirements.

3. For the national type-approval of vehicles produced in small series, the approval authority shall accept systems, components and separate technical units that are type-approved in accordance with the regulatory acts listed in Annex II.

4. The national type-approval certificate for vehicles produced in small series shall be given a unique number in accordance with a harmonised numbering system, which shall at least allow for the identification of the Member State which granted the type-approval and for characterising the approval as one granted for a national small series.

5. The Commission shall adopt implementing acts laying down the template and harmonised numbering system of the national type-approval certificate of vehicles produced in small series which shall bear the heading 'National small series vehicle type-approval certificate' and shall specify the content and the nature of the exemptions granted pursuant to paragraph 2 of this Article. Those implementing acts shall be adopted in accordance with the examination procedure referred to in Article 83(2). Until such time as the Commission adopts such implementing acts, Member States may continue to determine the format of national type-approval certificates.

Article 43

Validity of a national type-approval of vehicles produced in small series

1. The validity of a national type-approval of vehicles produced in small series shall be restricted to the territory of the Member State of the approval authority that has granted that type-approval.

2. At the request of the manufacturer, the approval authority shall send to the approval authorities of the Member States chosen by the manufacturer a copy of the national type-approval certificate, including the relevant parts of the information package referred to in Article 26 (4), either by registered mail or electronic mail.

3. The approval authorities of the Member States shall accept the national type-approval, unless they have reasonable grounds to believe that the national technical requirements in accordance with which the type of vehicle has been approved are not equivalent to their own.

4. Within two months of receipt of the documents referred to in paragraph 2, the approval authorities of Member States chosen by the manufacturer shall communicate to the approval authority that granted the national type-approval their decision to accept the type-approval or not. Where no such decision has been communicated within that two-month period, the national type-approval shall be deemed to have been accepted.

▼B

5. At the request of an applicant who wishes to place on the market, register or enter into service in another Member State a vehicle with a national type-approval of vehicles produced in small series, the approval authority that granted the national type-approval of vehicles produced in small series shall provide the national authority of the other Member State with a copy of the type-approval certificate, including the relevant parts of the information package.

The national authority of the other Member State shall permit the placing on the market, registration or entry into service of such vehicle, unless it has reasonable grounds to believe that the national technical requirements in accordance with which the type of vehicle has been approved are not equivalent to its own.

CHAPTER IX

INDIVIDUAL VEHICLE APPROVALS

Article 44

EU individual vehicle approvals

1. Member States shall grant an EU individual vehicle approval for a vehicle that complies with the requirements laid down in Appendix 2 to Part I of Annex II or, for special purpose vehicles, in Part III of Annex II.

This Chapter shall not apply to incomplete vehicles.

2. An application for an EU individual vehicle approval shall be submitted by the owner of the vehicle, the manufacturer, the manufacturer's representative or the importer.

3. Member States shall not carry out destructive tests to establish whether the vehicle complies with the requirements referred to in paragraph 1, but shall instead use any relevant information provided by the applicant for that purpose.

4. The EU individual vehicle approval certificate shall be given a unique number in accordance with a harmonised numbering system, which shall at least allow for the identification of the Member State which granted the EU individual vehicle approval.

5. The Commission shall adopt implementing acts laying down the template and the numbering system of EU individual vehicle approval certificates. Those implementing acts shall be adopted in accordance with the examination procedure referred to in Article 83(2). The first such implementing act shall be adopted by 5 July 2020.

6. Member States shall permit the placing on the market, registration or entry into service of vehicles with a valid EU individual vehicle approval certificate.

7. The Commission is empowered to adopt delegated acts in accordance with Article 82, amending Part I of Annex II to set out the technical requirements for vehicles of categories M, N and O.

▼B

Article 45

National individual vehicle approvals

1. Member States may decide to exempt a particular vehicle, whether unique or not, from the obligation to comply with one or more of the requirements of this Regulation or with one or more of the requirements laid down in the regulatory acts listed in Annex II, provided that those Member States have imposed relevant alternative requirements.

2. An application for national individual vehicle approval shall be submitted by the owner of the vehicle, the manufacturer, the manufacturer's representative or the importer.

3. Member States shall not carry out destructive tests to establish whether the vehicle complies with the alternative requirements referred to in paragraph 1, but shall instead use any relevant information provided by the applicant for that purpose.

4. For the purpose of a national individual vehicle approval, the approval authority shall accept systems, components and separate technical units that are type-approved in accordance with the regulatory acts listed in Annex II.

5. A Member State shall issue without delay a national individual vehicle approval certificate where the vehicle conforms to the description appended to the application and satisfies the relevant alternative requirements.

6. The national individual vehicle approval certificate shall be given a unique number in accordance with a harmonised numbering system, which shall at least allow for the identification of the Member State which granted the approval and for the identification of the requirements with which the vehicle conforms.

7. The Commission shall adopt implementing acts laying down the template and the numbering system of the national individual vehicle approval certificate. Those implementing acts shall be adopted in accordance with the examination procedure referred to in Article 83 (2). Until such time as the Commission adopts such implementing acts, Member States may continue to determine the format of national individual vehicle approval certificates.

Article 46

Validity of national individual vehicle approvals

1. The validity of a national individual vehicle approval shall be restricted to the territory of the Member State that granted the individual vehicle approval.

2. At the request of an applicant who wishes to make available on the market, register or enter into service in another Member State a vehicle with a national individual vehicle approval, the Member State that granted the approval shall provide the applicant with a statement of the technical requirements on the basis of which the vehicle has been approved.

▼B

3. A Member State shall permit a vehicle for which another Member State has granted a national individual vehicle approval in accordance with Article 45 to be made available on the market, be registered or enter into service in its territory, unless that Member State has reasonable grounds to believe that the relevant alternative requirements on the basis of which the vehicle has been approved are not equivalent to its own or that the vehicle does not comply with those requirements.

4. This Article applies to vehicles that have been type-approved in accordance with this Regulation and that have been modified before their first registration or entry into service.

Article 47

Specific provisions

1. The procedures set out in Articles 44 and 45 may apply to a particular vehicle built in multiple stages.

2. The procedures set out in Articles 44 and 45 shall not replace an intermediate stage within the normal sequence of a multi-stage type-approval, and shall not apply for the purposes of obtaining the first-stage approval of a vehicle.

CHAPTER X

MAKING AVAILABLE ON THE MARKET, REGISTRATION OR ENTRY INTO SERVICE

Article 48

Making available on the market, registration or entry into service of vehicles other than end-of-series vehicles

1. Without prejudice to Articles 51, 52 and 53, vehicles for which whole-vehicle type-approval is mandatory, or for which the manufacturer has obtained that type-approval, shall only be made available on the market, registered or enter into service if they are accompanied by a valid certificate of conformity issued in accordance with Articles 36 and 37.

Registration and entry into service of incomplete vehicles may be refused as long as the vehicles remain incomplete. Registration and entry into service of incomplete vehicles shall not be used to circumvent the application of Article 49.

2. The number of vehicles produced in small series that are made available on the market, are registered, or enter into service in the course of the same year shall not exceed the quantitative annual limits laid down in Annex V.

Article 49

Making available on the market, registration or entry into service of end-of-series vehicles

1. Subject to the limits specified in Part B of Annex V, and for a limited period of time as specified in paragraph 2, Member States may register and permit the making available on the market or entry into service of vehicles conforming to a type of vehicle whose EU type-approval is no longer valid.

▼B

The first subparagraph shall apply only to vehicles within the territory of the Union which were covered by a valid EU type-approval at the time of their production and which had not been registered or entered into service before that EU type-approval lost its validity.

2. Paragraph 1 shall only apply, in the case of complete vehicles, for a period of 12 months from the date on which validity of the EU type-approval expired and, in the case of completed vehicles, for a period of 18 months from that date.

3. A manufacturer who wishes to benefit from paragraph 1 shall submit a request to the competent authority of each Member State concerned by the registration or the entry into service of the vehicles in question. The request shall specify any technical or economic reasons preventing those vehicles from complying with the new technical requirements.

The Member States concerned shall decide, within three months of receiving such a request, whether to permit the registration or the entry into service of those vehicles within their territory, and if so, the number of such vehicles.

4. Member States shall apply appropriate measures to ensure that the number of vehicles to be registered or entered into service in the framework of the procedure set out in this Article is effectively monitored.

Article 50

Making available on the market or entry into service of components and separate technical units

1. Components and separate technical units, including those intended for the aftermarket, may only be made available on the market or entered into service if they comply with the requirements of the relevant regulatory acts listed in Annex II and are marked in accordance with Article 38.

2. Paragraph 1 shall not apply to components or separate technical units that are specifically constructed or designed for vehicles that are not covered by this Regulation.

3. Member States may permit the making available on the market or the entry into service of components and separate technical units that are exempted under Article 39 or that are to be used on vehicles covered by approvals granted under Article 41, 42, 44 and 45 concerning the component or separate technical unit in question.

4. Member States may also permit the making available on the market or the entry into service of components and separate technical units to be used on vehicles that were not required to be type-approved under this Regulation or under Directive 2007/46/EC at the time those vehicles were made available on the market, were registered, or entered into service.

▼B

5. Member States may also permit the making available on the market or the entry into service of replacement components and separate technical units to be used on vehicles to which type-approval was granted before the entry into force of the requirements of the relevant regulatory acts listed in Annex II, in accordance with the requirements of the relevant act that applied when those type-approvals were originally granted.

CHAPTER XI

SAFEGUARD CLAUSES

Article 51

National evaluation regarding vehicles, systems, components and separate technical units suspected of presenting a serious risk or non-compliance

Where, based on their own market surveillance activities, or based on information provided by an approval authority or a manufacturer or based on complaints, the market surveillance authorities of one Member State have sufficient reasons to believe that a vehicle, system, component or separate technical unit presents a serious risk to the health or safety of persons or to other aspects of the protection of public interests covered by this Regulation or does not comply with the requirements laid down in this Regulation, they shall evaluate the vehicle, system, component or separate technical unit concerned with respect to the relevant requirements laid down in this Regulation. The relevant economic operators and the relevant approval authorities shall cooperate fully with the market surveillance authorities, which shall include forwarding the results of all relevant checks or tests performed in accordance with Article 31.

Article 20 of Regulation (EC) No 765/2008 shall apply to the risk assessment of the vehicle, system, component or separate technical unit concerned.

Article 52

National procedures for dealing with vehicles, systems, components and separate technical units presenting a serious risk or non-compliance

1. Where, after having performed the evaluation pursuant to Article 51, the market surveillance authority of one Member State finds that a vehicle, system, component or separate technical unit presents a serious risk to the health or safety of persons or to other aspects of the protection of public interests covered by this Regulation, it shall require without delay that the relevant economic operator take all appropriate corrective measures without delay to ensure that the vehicle, system, component or separate technical unit concerned, when placed on the market, registered or entered into service, no longer presents that risk.

▼B

2. Where, after having performed the evaluation pursuant to Article 51, the market surveillance authority of one Member State finds that a vehicle, system, component or separate technical unit does not comply with this Regulation, but does not present a serious risk as referred to in paragraph 1 of this Article, it shall require without delay that the relevant economic operator take all appropriate corrective measures within a reasonable period to bring a vehicle, system, component or separate technical unit into compliance. That period shall be proportionate to the seriousness of non-compliance to ensure that the vehicle, system, component or separate technical unit concerned is compliant when it is placed on the market, is registered, or enters into service.

Economic operators shall, in accordance with the obligations set out in Articles 13 to 21, ensure that all appropriate corrective measures are taken in respect of all concerned vehicles, systems, components or separate technical units that they have placed on the market, registered or entered into service in the Union.

3. Where economic operators do not take adequate corrective measures within the relevant period referred to in paragraph 1 or 2, or where the risk requires rapid action, the national authorities shall take all appropriate provisional restrictive measures to prohibit or restrict the making available on the market, the registration or the entry into service of the concerned vehicles, systems, components or separate technical units, on their national market, or to withdraw them from that market or to recall them.

Article 21 of Regulation (EC) No 765/2008 shall apply to the restrictive measures referred to in the first subparagraph of this paragraph.

4. The Commission may adopt implementing acts laying down a classification of the seriousness of the non-compliance and the appropriate measures to be taken by national authorities to ensure the uniform application of this Article. Those implementing acts shall be adopted in accordance with the examination procedure referred to in Article 83(2).

Article 53

Corrective and restrictive measures at Union level

1. The Member State taking corrective or restrictive measures in accordance with Article 52 shall notify the Commission and the other Member States without delay, by means of ICSMS. It shall also inform without delay the approval authority that granted the approval about its findings.

The information provided shall include all available details, in particular the data necessary for the identification of the concerned vehicle, system, component or separate technical unit, its origin, the nature of the alleged non-compliance and the risk involved, the nature and duration of the national corrective and restrictive measures taken, and the arguments put forward by the relevant economic operator.

▼B

2. The Member State that takes the corrective or restrictive measure shall also indicate whether the risk or the non-compliance is due to the following:

(a) the failure of the vehicle, system, component or separate technical unit to meet requirements relating to the health or safety of persons, to the protection of the environment or to other aspects of the protection of public interests covered by this Regulation; or

(b) shortcomings in the relevant regulatory acts listed in Annex II.

3. Member States other than the Member State that takes corrective or restrictive measures shall inform within one month after the notification referred to in paragraph 1, the Commission and the other Member States of any corrective or restrictive measures they have adopted and of any additional information at their disposal relating to the non-compliance and the risk of the vehicle, system, component or separate technical unit concerned, as well as, in the event of disagreement with the notified national measure, of their objections.

4. Where, within one month after the notification referred to in paragraph 1, no objection has been raised by either another Member State or the Commission in respect of a notified national measure, that measure shall be deemed to be justified. The other Member States shall ensure that similar corrective or restrictive measures are taken without delay within their territories in respect of the vehicle, system, component or separate technical unit concerned.

5. Where, within one month after the notification referred to in paragraph 1, another Member State or the Commission raises an objection in respect of a notified national measure, or where the Commission considers that a notified national measure is contrary to Union law, the Commission shall consult the Member States concerned and the relevant economic operator or operators without delay.

On the basis of the consultation referred to in the first subparagraph of this paragraph, the Commission shall adopt implementing acts to decide on harmonised corrective or restrictive measures at Union level. Those implementing acts shall be adopted in accordance with the examination procedure referred to in Article 83(2).

The Commission shall immediately communicate the decision referred to in the second subparagraph to the relevant economic operator or operators. Member States shall implement such acts without delay and shall inform the Commission accordingly.

Where the Commission considers that a notified national measure is unjustified, the Member State concerned shall withdraw or adapt the measure, in accordance with the Commission decision referred to in the second subparagraph.

6. Where following tests and inspections carried out by the Commission in accordance with Article 9, the Commission establishes that a corrective or restrictive measure is necessary at Union level, it shall without delay consult the Member States concerned and the relevant economic operator or operators.

▼B

On the basis of consultation referred to in the first subparagraph of this paragraph, the Commission shall adopt implementing acts to decide on corrective or restrictive measures at Union level. Those implementing acts shall be adopted in accordance with the examination procedure referred to in Article 83(2).

The Commission shall immediately communicate the decision referred to in the second subparagraph to the relevant economic operator or operators. Member States shall implement such acts without delay and shall inform the Commission accordingly.

7. Where the risk or non-compliance is attributed to shortcomings in regulatory acts listed in Annex II, the Commission shall propose appropriate measures as follows:

(a) where legal acts of the Union are concerned, the Commission shall propose the necessary amendments to the acts concerned;

(b) where UN Regulations are concerned, the Commission shall propose the necessary draft amendments to the relevant UN Regulations in accordance with the procedure applicable under the Revised 1958 Agreement.

8. Where a corrective measure is considered to be justified in accordance with this Article or is subject to the implementing acts as referred to in paragraph 5 or 6, that measure shall be available free of charge to holders of registrations for the affected vehicles. Where repairs have been carried out at the registration holder's expense before the adoption of the corrective measure, the manufacturer shall reimburse the cost of such repairs up to the cost of the repairs required by that corrective measure.

Article 54

Non-compliant EU type-approval

1. Where an approval authority finds that a type-approval that has been granted does not comply with this Regulation, it shall refuse to recognise that approval.

2. The approval authority shall notify its refusal to the approval authority that granted the EU type-approval, to the approval authorities of the other Member States, and to the Commission. Where within one month after the notification, the non-compliance of the type-approval is confirmed by the approval authority that granted the EU type-approval, that approval authority shall withdraw the type-approval.

3. Where, within one month after the notification referred to in paragraph 2, an objection has been raised by the approval authority that granted the EU type-approval, the Commission shall consult the Member States without delay, in particular the approval authority that granted the type-approval and the relevant economic operator.

▼B

4. On the basis of the consultation referred to in paragraph 3 of this Article, the Commission shall adopt implementing acts to decide if the refusal of recognition of EU type-approval referred to in paragraph 1 of this Article is justified. Those implementing acts shall be adopted in accordance with the examination procedure referred to in Article 83(2).

The Commission shall immediately communicate the decision referred to in the first subparagraph to the relevant economic operators. The Member States shall implement such acts without delay and shall inform the Commission accordingly.

5. Where, following tests and inspections carried out by the Commission in accordance with Article 9, the Commission establishes that a type-approval that has been granted is not compliant with this Regulation, it shall consult the Member States without delay, in particular the approval authority that granted the type-approval and the relevant economic operator.

On the basis of consultations referred to in the first subparagraph of this paragraph the Commission shall adopt an implementing act to decide on the refusal of the recognition of type-approval referred to in paragraph 1 of this Article. Those implementing acts shall be adopted in accordance with the examination procedure referred to in Article 83(2).

6. Articles 51, 52 and 53 apply to vehicles, systems, components and separate technical units that are the subject of a non-compliant type-approval and that are already made available on the market.

Article 55

Placing on the market and entry into service of parts or equipment that may pose a serious risk to the correct functioning of essential systems

1. Parts or equipment that may pose a serious risk to the correct functioning of systems that are essential for the safety of the vehicle or for its environmental performance shall not be placed on the market, shall not enter into service, and shall be prohibited, unless they have been authorised by an approval authority in accordance with Article 56.

2. Such authorisations shall only apply to the limited number of parts or equipment, that are included in the list referred to in paragraph 4.

3. The Commission is empowered to adopt delegated acts in accordance with Article 82, supplementing this Regulation by laying down the requirements for the authorisation of the parts and equipment referred to in paragraph 1 of this Article.

Those requirements may be based on the regulatory acts listed in Annex II or may consist of a comparison of the environmental or safety performance of the parts or equipment with the environmental or safety performance of the original parts or equipment, as appropriate. In either case, the requirements shall ensure that the parts or equipment do not impair the functioning of the systems that are essential for the safety of the vehicle or for its environmental performance.

▼B

4. The Commission is empowered to adopt delegated acts in accordance with Article 82, amending Annex VI to take account of technical and regulatory developments by laying down and updating the list of parts or equipment on the basis of an evaluation of the following:

(a) the extent to which there exists a serious risk to the safety or environmental performance of vehicles that are fitted with the parts or equipment in question;

(b) the potential effect on consumers and aftermarket manufacturers of a possible authorisation of the parts or equipment under Article 56 (1).

5. Paragraph 1 shall not apply to original parts or equipment or to parts or equipment belonging to a system that has been type-approved in accordance with the regulatory acts listed in Annex II, except where the type-approval relates to aspects other than the serious risk referred to in paragraph 1.

For the purposes of this Article, original parts or equipment means parts or equipment that are manufactured according to the specifications and production standards provided by the vehicle manufacturer for the assembly of the vehicle in question.

6. Paragraph 1 of this Article shall not apply to parts or equipment that are exclusively produced for racing vehicles. Parts or equipment listed in Annex VI that are used both in racing and on the road shall only be made available on the market for vehicles intended for use on public roads, if they comply with the requirements laid down in the delegated acts referred to in paragraph 3 of this Article and have been authorised by the Commission. The Commission shall adopt implementing acts to decide whether to grant those authorisations. Those implementing acts shall be adopted in accordance with the examination procedure referred to in Article 83(2).

Article 56

Related requirements for parts or equipment that may pose a serious risk to the correct functioning of essential systems

1. A manufacturer of parts or equipment may apply for the authorisation referred to in Article 55(1) by submitting to the approval authority an application accompanied by a test report that is drafted by a technical service and that certifies that the parts or equipment for which authorisation is sought comply with the requirements referred to in Article 55(3). Such manufacturer may submit only one application for each type of part or equipment and to one approval authority only.

2. The application for the authorisation shall include details of the manufacturer of the parts or equipment, the type, the identification and part numbers of the parts or equipment, the vehicle manufacturer's name, the type of vehicle and, where appropriate, the year of construction and any other information permitting the identification of the vehicle to which the parts or equipment are to be fitted.

▼B

The approval authority shall authorise the placing on the market and the entering into service of the parts or equipment where it finds, taking into account the test report referred to in paragraph 1 of this Article and other evidence, that the parts or equipment in question comply with the requirements referred to in Article 55(3).

The approval authority shall issue to the manufacturer an authorisation certificate without delay.

The Commission shall adopt implementing acts laying down the template and the numbering system for the authorisation certificate referred to in the third subparagraph of this paragraph. Those implementing acts shall be adopted in accordance with the examination procedure referred to in Article 83(2).

3. The manufacturer shall inform without delay the approval authority that issued the authorisation of any change affecting the conditions under which the authorisation has been issued. That approval authority shall decide whether the authorisation has to be reviewed or reissued and whether further tests are necessary.

The manufacturer shall ensure that the parts or equipment are produced and continue to be produced under the conditions under which the authorisation has been issued.

4. Before issuing any authorisation, the approval authority shall verify the existence of arrangements and procedures for ensuring effective control of the conformity of production.

Where the approval authority finds that the conditions for issuing the authorisation are no longer fulfilled, it shall request the manufacturer to take the necessary measures to ensure that the parts or equipment are brought into conformity. Where necessary, it shall withdraw the authorisation.

5. Upon request of a national authority of another Member State, the approval authority that has issued the authorisation shall, within one month of the receipt of that request, send to the former a copy of the issued authorisation certificate together with its attachments by means of a common secure electronic exchange system. The copy may also take the form of a secure electronic file.

6. An approval authority that disagrees with the authorisation issued by another Member State shall bring the reasons for its disagreement to the attention of the Commission. The Commission shall take the appropriate measures in order to resolve the disagreement. *Inter alia*, the Commission may, where necessary and after having consulted the relevant approval authorities, adopt implementing acts requiring the withdrawal of the authorisation. Those implementing acts shall be adopted in accordance with the examination procedure referred to in Article 83(2).

7. Until the list referred to in Article 55(4) has been established, Member States may maintain national provisions regarding parts or equipment that may affect the correct functioning of systems essential for the safety of the vehicle or its environmental performance.

▼B

CHAPTER XII

INTERNATIONAL REGULATIONS

Article 57

UN Regulations required for EU type-approval

1. UN Regulations or amendments thereto which the Union has voted in favour of, or that the Union applies and that are listed in Annex II, shall be part of the requirements for the EU type-approval of vehicles, systems, components or separate technical units.

2. Where the Union has voted in favour of a UN Regulation or amendments thereto for the purpose of whole-vehicle type-approval, the Commission shall adopt delegated acts in accordance with Article 82, supplementing this Regulation by making that UN Regulation or the amendments thereto compulsory or amending this Regulation.

Those delegated acts shall specify the dates from which that UN Regulation or amendments are to be compulsory, and shall include transitional provisions, where appropriate, and, where applicable for the purposes of EU type-approval, first registration and entry into service of vehicles and making available on the market of systems, components and separate technical units.

Article 58

Equivalence of UN Regulations for the purpose of EU type-approval

1. The UN Regulations listed in Part II of Annex II are recognised as being equivalent to the corresponding regulatory acts to the extent that they share the same scope and subject matter.

2. The approval authorities of the Member States shall accept type-approvals granted in accordance with the UN Regulations referred to in paragraph 1 and, where applicable, shall accept the relevant approval marks in place of the corresponding type-approvals and approval marks that were granted in accordance with this Regulation and the regulatory acts listed in Annex II.

CHAPTER XIII

PROVISION OF TECHNICAL INFORMATION

Article 59

Information intended for users

1. The manufacturer shall not supply any technical information related to the particulars of the type of vehicle, system, component, separate technical unit, part or equipment provided for in this Regulation or in the regulatory acts listed in Annex II, that diverges from the particulars of the type-approval granted by the approval authority.

▼B

2. The manufacturer shall make available to users all relevant information and necessary instructions that describe any special conditions or restrictions on the use of a vehicle, system, component, separate technical unit, part or equipment.

3. The information referred to in paragraph 2 shall be supplied in the official language or languages of the Member State where the vehicle, system, component, separate technical unit, part or equipment is to be placed on the market, registered or is to be entered into service. It shall also be provided in the owner's manual.

Article 60

Information intended for manufacturers

1. Manufacturers of vehicles shall make available to the manufacturers of systems, components, separate technical units, parts or equipment all particulars that are necessary for EU type-approval of systems, components or separate technical units or to obtain the authorisation referred to in Article 55(1).

Manufacturers of vehicles may impose a binding agreement on the manufacturers of systems, components, separate technical units, parts or equipment to protect the confidentiality of any information that is not in the public domain, including information related to intellectual property rights.

2. Manufacturers of systems, components, separate technical units, parts or equipment shall provide the manufacturers of vehicles with all detailed information on the restrictions that apply to their type-approvals and that are either referred to in Article 29(3) or imposed by a regulatory act listed in Annex II.

CHAPTER XIV

ACCESS TO VEHICLE OBD INFORMATION AND VEHICLE REPAIR AND MAINTENANCE INFORMATION

Article 61

Manufacturers' obligations to provide vehicle OBD information and vehicle repair and maintenance information

1. Manufacturers shall provide to independent operators unrestricted, standardised and non-discriminatory access to vehicle OBD information, diagnostic and other equipment, tools including the complete references, and available downloads, of the applicable software and vehicle repair and maintenance information. Information shall be presented in an easily accessible manner in the form of machine-readable and electronically processable datasets. Independent operators shall have access to the remote diagnosis services used by manufacturers and authorised dealers and repairers.

▼B

Manufacturers shall provide a standardised, secure and remote facility to enable independent repairers to complete operations that involve access to the vehicle security system.

2. Until the Commission has adopted a relevant standard through the work of the European Committee for Standardisation (CEN) or a comparable standardisation body, the vehicle OBD information and vehicle repair and maintenance information shall be presented in an easily accessible manner that can be processed with reasonable effort by independent operators.

The vehicle OBD information and the vehicle repair and maintenance information shall be made available on the websites of manufacturers using a standardised format or, if this is not feasible, due to the nature of the information, in another appropriate format. For independent operators other than repairers, the information shall also be given in a machine-readable format that is capable of being electronically processed with commonly available information technology tools and software and which allows independent operators to carry out the task associated with their business in the aftermarket supply chain.

3. However, in the following cases, it shall be sufficient that the manufacturer provides the required information promptly in an easily accessible manner when an independent operator so requests:

(a) for vehicle types covered by a national type-approval of vehicles produced in small series as referred to in Article 42;

(b) for special purpose vehicles;

(c) for vehicle types of categories O_1 and O_2 that do not use diagnostic tools or a physical or wireless communication with the on-board electronic control unit or units for the purpose of diagnostics or reprogramming of their vehicles;

(d) for the final stage of type-approval in a multi-stage type-approval procedure, where the final stage only covers bodywork which does not contain electronic vehicle control systems, and all electronic vehicle control systems of the base vehicle remain unchanged.

4. The details of the technical requirements for access to vehicle OBD information and vehicle repair and maintenance information, in particular technical specifications on how vehicle OBD information and vehicle repair and maintenance information are to be provided, are laid down in Annex X.

5. Manufacturers shall also make training material available to independent operators and authorised dealers and repairers.

6. Manufacturers shall ensure that the vehicle OBD information and the vehicle repair and maintenance information are always accessible, except as required for maintenance purposes of the information system.

▼B

Manufacturers shall make any subsequent amendments and supplements to vehicle OBD information and vehicle repair and maintenance information available on their websites at the same time they are made available to authorised repairers.

7. For the purposes of manufacturing and servicing of OBD-compatible replacement or service parts and diagnostic tools and test equipment, manufacturers shall provide the relevant vehicle OBD information and vehicle repair and maintenance information on a non-discriminatory basis to any interested manufacturer or repairer of components, diagnostic tools or test equipment.

8. For the purposes of the design, manufacturing and the repair of automotive equipment for alternative-fuel vehicles, manufacturers shall provide the relevant vehicle OBD information and vehicle repair and maintenance information on a non-discriminatory basis to any interested manufacturer, installer or repairer of equipment for alternative-fuel vehicles.

9. Where repair and maintenance records of a vehicle are kept in a central database of the vehicle manufacturer or on its behalf, independent repairers shall have access to such records free of charge and shall be able to enter information on repair and maintenance which they have performed.

10. This Chapter shall not apply to vehicles that are covered by individual vehicle approvals.

11. The Commission is empowered to adopt delegated acts in accordance with Article 82, amending Annex X to take account of technical and regulatory developments or prevent misuse by updating the requirements concerning the access to vehicle OBD information and vehicle repair and maintenance information, including the repair and maintenance activities supported by wireless wide area networks and by adopting and integrating the standards referred to in paragraph 2 of this Article. The Commission shall take into account current information technology, foreseeable vehicle technology developments, existing ISO standards and the possibility of a worldwide ISO standard.

Article 62

Obligations with regard to holders of several type-approvals

1. The manufacturer responsible for the respective type-approval of a system, component or separate technical unit or for a particular stage of a vehicle shall be responsible, in the event of a mixed type-approval, a step-by-step type-approval or a multi-stage type-approval, for communicating to both the final manufacturer and the independent operators the repair and maintenance information relating to the particular system, component or separate technical unit or to the particular stage.

▼B

2. In the case of multi-stage type-approval, the final manufacturer shall be responsible for providing access to vehicle OBD information and vehicle repair and maintenance information regarding its own manufacturing stage or stages and the link to the previous stage or stages.

Article 63

Fees for access to vehicle repair and maintenance information

1. The manufacturer may charge reasonable and proportionate fees for access to vehicle repair and maintenance information other than the records referred to in Article 61(10). Those fees shall not discourage access to such information by failing to take into account the extent to which the independent operator uses it. Access to vehicle repair and maintenance information shall be offered free of charge to national authorities, the Commission and technical services.

2. The manufacturer shall make available vehicle repair and maintenance information, including transactional services such as reprogramming or technical assistance, on an hourly, daily, monthly, and yearly basis, with fees for access to such information varying in accordance with the respective periods of time for which access is granted.

In addition to time-based access, manufacturers may offer transaction-based access for which fees are charged per transaction and not based on the duration for which access is granted.

Where the manufacturer offers both systems of access, independent repairers shall choose systems of access, which may be either time-based or transaction-based.

Article 64

Proof of compliance with vehicle OBD information and repair and maintenance information obligations

1. The manufacturer that has applied for EU type-approval or national type-approval shall provide the approval authority with proof of compliance with this Chapter within six months from the date of the respective type-approval.

2. Where such proof of compliance is not provided within the period referred to in paragraph 1 of this Article, the approval authority shall take appropriate measures in accordance with Article 65.

Article 65

Compliance with the obligations regarding access to vehicle OBD information and vehicle repair and maintenance information

1. An approval authority may at any time, whether on its own initiative, on the basis of a complaint, or on the basis of an assessment by a technical service, check that a manufacturer is in compliance with this

▼B

Chapter and with the Manufacturer's certificate on access to vehicle OBD information and vehicle repair and maintenance information referred to in Appendix 1 to Annex X.

2. Where an approval authority finds that the manufacturer has failed to comply with its obligations regarding access to vehicle OBD information and vehicle repair and maintenance information, the approval authority that granted the relevant type-approval shall take appropriate measures to remedy the situation.

Those measures may include the withdrawal or suspension of the type-approval, fines or other measures adopted pursuant to Article 84.

3. Where an independent operator or a trade association representing independent operators files a complaint to the approval authority on the failure of the manufacturer to comply with this Chapter, the approval authority shall carry out an audit in order to verify compliance by the manufacturer. The approval authority shall request the approval authority that granted the whole vehicle type-approval to investigate the complaint and subsequently to ask for evidence from the vehicle manufacturer demonstrating that the system that the vehicle manufacturer has in place is in compliance with this Regulation. The results of that investigation shall be communicated to the national approval authority and the independent operator or trade association concerned within three months of the request.

4. When carrying out the audit, the approval authority may ask a technical service or any other independent expert to carry out an assessment to verify whether the obligations concerning access to vehicle OBD information and vehicle repair and maintenance information have been met.

Article 66

Forum on Access to Vehicle Information

1. The Forum on Access to Vehicle Information regarding access to vehicle OBD information and vehicle repair and maintenance information, established in accordance with Article 13(9) of Commission Regulation (EC) No 692/2008 ([1]), shall also cover all vehicles within the scope of this Regulation.

It shall carry out its activities in accordance with Annex X to this Regulation.

([1]) Commission Regulation (EC) No 692/2008 of 18 July 2008 implementing and amending Regulation (EC) No 715/2007 of the European Parliament and of the Council on type-approval of motor vehicles with respect to emissions from light passenger and commercial vehicles (Euro 5 and Euro 6) and on access to vehicle repair and maintenance information (OJ L 199, 28.7.2008, p. 1).

▼B

2. The Forum on Access to Vehicle Information shall consider whether access to vehicle OBD information and vehicle repair and maintenance information affects the advances made in reducing vehicle theft, and shall make recommendations for improving the requirements relating to access to such information. In particular, the Forum on Access to Vehicle Information shall advise the Commission on the introduction of a process by which accredited organisations approve and authorise independent operators to access information on vehicle security.

The Commission may decide to keep the discussions and findings of the Forum on Access to Vehicle Information confidential.

CHAPTER XV

ASSESSMENT, DESIGNATION, NOTIFICATION AND MONITORING OF TECHNICAL SERVICES

Article 67

Type-approval authority responsible for technical services

1. The approval authority designated by the Member State in accordance with Article 6(2), (referred to for the purposes of this Chapter as the 'type-approval authority'), shall be responsible for the assessment, designation, notification and monitoring of technical services, including, where appropriate, the subcontractors or subsidiaries of those technical services. The type-approval authority may decide that the assessment and monitoring of technical services and, where appropriate, of the subcontractors or subsidiaries of those technical services, is to be carried out by a national accreditation body.

2. Type-approval authorities shall be subject to peer evaluations in respect of any activity which they carry out related to the assessment and monitoring of technical services.

Peer evaluations shall cover the assessments of the entire or partial operations of technical services that have been carried out by type-approval authorities in accordance with Article 73(4), including the competence of the personnel, the correctness of the test and inspection methodology and the correctness of test results based on a defined scope of regulatory acts listed in Part I of Annex II.

Activities related to the assessment and monitoring of technical services that only deal with national individual approvals that were granted in accordance with Article 45 or with national type-approvals of vehicles produced in small series that were granted in accordance with Article 42 are exempted from peer evaluations

Any assessment of accredited technical services by type-approval authorities shall be exempt from peer evaluations.

▼B

3. Type-approval authorities shall not be subject to peer evaluations when they designate all their technical services exclusively on the basis of accreditation of the technical services.

4. The type-approval authority shall not provide consultancy services on a commercial or competitive basis.

5. The type-approval authority shall have a sufficient personnel at its disposal to carry out the tasks laid down in this Regulation.

6. Each Member State shall provide the Commission, the Forum and other Member States that so request with information on its procedures for the assessment, designation and notification of technical services and for the monitoring of technical services, and of any changes to the procedures.

The Commission may adopt implementing acts laying down the model for the provision of information on the procedures of the Member States referred to in the first subparagraph of this paragraph. Those implementing acts shall be adopted in accordance with the examination procedure referred to in Article 83(2).

7. Type-approval authorities that are subject to peer-evaluations shall establish procedures for internal audits in accordance with Appendix 2 of Annex III. Such internal audits shall be performed at least once a year. However, the frequency of internal audits may be reduced if the type-approval authority can demonstrate that its management system is being implemented effectively and has proven stability.

8. Peer-evaluations of a type-approval authority shall be carried out at least once every five years by a peer-evaluation team, composed of two type-approval authorities from other Member States.

The Commission may decide to participate in the peer-evaluation team on the basis of a risk assessment analysis.

The peer-evaluation shall be carried out under the responsibility of the approval authority that is subject to evaluation, and shall include a visit to the premises of a technical service selected at the discretion of the peer-evaluation team.

Type-approval authorities that are not subject to peer-evaluation in accordance with paragraph 3 shall not be included in any of the activities related to the peer-evaluation team.

▼B

9. Taking duly into account the considerations of the Forum, the Commission may adopt implementing acts setting out a plan for peer-evaluations covering a period of at least five years, laying down criteria concerning the composition of the peer-evaluation team, the methodology used for the peer-evaluation, the schedule, periodicity and the other tasks related to the peer-evaluation. Those implementing acts shall be adopted in accordance with the examination procedure referred to in Article 83(2).

10. The outcome of the peer evaluations shall be examined by the Forum. The Commission shall draw up summaries of the outcome of peer evaluations and make them public.

Article 68

Designation of technical services

1. The type-approval authorities shall designate technical services for one or more of the following categories of activities, depending on their field of competence:

(a) category A: tests referred to in this Regulation and in the regulatory acts listed in Annex II that technical services carry out in their own facilities;

(b) category B: the supervision of the tests, which includes test preparation, referred to in this Regulation and in the regulatory acts listed in Annex II, where such tests are performed at the manufacturer's facilities or at the facilities of a third party;

(c) category C: the assessment and monitoring on a regular basis of the procedures of the manufacturer for controlling the conformity of production;

(d) category D: the supervision or performance of tests or inspections for the surveillance of the conformity of production.

2. Each Member State may designate a type-approval authority as a technical service for one or more of the categories of activities referred to in paragraph 1.

3. A technical service shall be established under the law of a Member State and have legal personality, except for a technical service belonging to a type-approval authority and except for an accredited in-house technical service of the manufacturer, as referred to in Article 72.

4. A technical service shall take out liability insurance for its activities, unless such liability is assumed by its Member State in accordance with national law, or unless the Member State itself is directly responsible for the conformity assessment.

▼B

5. Technical services of a third country, other than those that have been designated in accordance with Article 72, may only be designated and may only be notified to the Commission for the purposes of Article 74 where a bilateral agreement between the Union and the third country concerned provides for the possibility of designating such technical services. This shall not prevent a technical service that is established under the law of a Member State in accordance with paragraph 3 of this Article from establishing subsidiaries in third countries, provided that those subsidiaries are directly managed and controlled by the designated technical service.

Article 69

Independence of the technical services

1. A technical service, including its personnel, shall be independent and shall carry out the activities for which it has been designated with the highest degree of professional integrity and the requisite technical competence in the specific field in which it operates and shall be free from all pressures and inducements, particularly financial, that might influence its judgment or the results of its assessment activities, in particular such pressures or inducements emanating from persons or groups of persons with an interest in the results of those activities.

2. Technical services shall be third-party organisation or body that is not involved in the process of the design, manufacturing, supply or maintenance of the vehicle, system, component or separate technical unit that it assesses, tests or inspects.

An organisation or body that belongs to a trade association or to a professional federation representing undertakings that are involved in the design, manufacturing, supply or maintenance of the vehicles, systems, components or separate technical units that it assesses, tests or inspects, may be considered as fulfilling the requirements of the first subparagraph, provided that its independence and the absence of any conflict of interest are demonstrated to the type-approval authority of the relevant Member State.

3. A technical service, its top-level management and the personnel responsible for carrying out the activities for which they are designated in accordance with Article 68(1) shall not design, manufacture, supply, or maintain the vehicles, systems, components or separate technical units that they assess, nor represent parties engaged in those activities. This shall not preclude the use of those vehicles, systems, components or separate technical units that are necessary for the operation of the technical service or the use of such vehicles, systems, components or separate technical units for personal purposes.

4. A technical service shall ensure that the activities of its subsidiaries or subcontractors do not affect the confidentiality, objectivity or impartiality of the categories of activities for which it has been designated.

▼B

5. The personnel of a technical service shall observe professional secrecy with regard to all information obtained in carrying out their tasks under this Regulation, except in relation to the type-approval authority and, where relevant, to the national accreditation body, or where required by Union or national law.

Article 70

Competence of the technical services

1. A technical service shall be capable of carrying out all the activities for which it is applying to be designated in accordance with Article 68(1). It shall demonstrate to the type-approval authority or to the national accreditation body carrying out the assessment or monitoring of that technical service that it satisfies all of the following conditions:

(a) its personnel have the appropriate skills, the specific technical knowledge, the vocational training and sufficient and appropriate experience to perform the activities for which it is applying to be designated;

(b) it possesses descriptions of the procedures relevant for the performance of the activities for which it is applying to be designated, taking due account of the degree of complexity of the technology of the relevant vehicle, system, component or separate technical unit in question, as well as the mass or serial nature of the production process. The technical service shall demonstrate the transparency and reproducibility of those procedures;

(c) it has the necessary means to perform the tasks connected with the category or categories of activities for which it is applying to be designated, and it has access to all necessary equipment or facilities.

2. A technical service shall also demonstrate that it has the appropriate skills, the specific technical knowledge and proven experience to carry out tests and inspections for assessing the conformity of the vehicles, systems, components and separate technical units with this Regulation and shall demonstrate its compliance with the standards listed in Appendix 1 to Annex III. However, the standards listed in Appendix 1 to Annex III do not apply for the purposes of the last stage of a national multi-stage procedure referred to in Article 47(1).

3. The Commission is empowered to adopt delegated acts in accordance with Article 82, amending Annex III as regards the requirements for the assessment of the technical services.

Article 71

Subsidiaries of and subcontracting by technical services

1. Technical services may subcontract, with the agreement of the designating type-approval authority, some of the categories of activities for which they have been designated in accordance with Article 68(1), or have those activities carried out by a subsidiary.

▼B

2. Where a technical service subcontracts specific tasks within the categories of activities for which it has been designated or has a subsidiary perform those tasks, it shall ensure that the subcontractor or the subsidiary complies with the requirements set out in Articles 68, 69 and 70 and shall inform the type-approval authority thereof.

3. Technical services shall take full responsibility for the tasks performed by their subcontractors or subsidiaries, regardless of their place of establishment.

4. Technical services shall keep at the disposal of the designating type-approval authority the relevant documents concerning the assessment carried out by the type-approval authority or the accreditation carried out by the national accreditation body of the subcontractor or the subsidiary and the tasks performed by them.

Article 72

In-house technical service of the manufacturer

1. An in-house technical service of a manufacturer may be designated as a technical service for activities under category A as referred to in point (a) of Article 68(1), and only with regard to the regulatory acts listed in Annex VII. An in-house technical service shall constitute a separate and distinct part of the manufacturer's company and shall not be involved in the design, manufacturing, supply or maintenance of the vehicles, systems, components or separate technical units that it assesses.

2. An in-house technical service referred to in paragraph 1 shall comply with the following requirements:

(a) it has been accredited by a national accreditation body and complies with the requirements laid down in Appendices 1 and 2 to Annex III;

(b) the in-house technical service, including its personnel, is organisationally identifiable and has reporting methods within the manufacturer's company of which they form part that ensures its impartiality and demonstrates that impartiality to the relevant type-approval authority and to the national accreditation body;

(c) neither the in-house technical service nor its personnel is engaged in any activity that might conflict with its independence or with its integrity to perform the activities for which it has been designated;

(d) it supplies its services only to the manufacturer's company of which it forms part.

3. The Commission is empowered to adopt delegated acts in accordance with Article 82, amending Annex VII to take account of technical and regulatory developments by updating the list of regulatory acts and restrictions contained therein.

Article 73

Assessment and designation of technical services

1. The applicant technical service shall submit a formal application to the type-approval authority of the Member State in which it requests to be designated in accordance with point 4 of Appendix 2 to Annex III. The application shall specify the categories of the activities for which the technical service is applying to be designated.

▼B

2. Before a type-approval authority designates a technical service, the type-approval authority or the national accreditation body shall assess it in accordance with an assessment check-list that covers at least the requirements laid down in Appendix 2 to Annex III. The assessment shall include an on-site assessment in the premises of the applicant technical service, and, where relevant, of any subsidiary or sub-contractor, whether located inside or outside the Union.

3. In cases where the assessment is carried out by a national accreditation body, the applicant technical service shall deliver to the type-approval authority a valid accreditation certificate and the corresponding assessment report attesting that the technical service fulfils the requirements laid down in Appendix 2 to Annex III for the categories of activities for which the applicant technical service is applying to be designated.

4. In cases where the assessment is carried out by the type-approval authority, the type-approval authority of the Member State from which the applicant technical service has requested to be designated shall formally appoint a joint assessment team composed of representatives of the type-approval authorities of at least two other Member States and a representative of the Commission.

Where the technical service applies to be designated in a Member State other than the Member State of its establishment, one of the representatives of the joint assessment team shall be from the type-approval authority of the Member State of its establishment, unless that type-approval authority decides against participating in the joint assessment team.

The joint assessment team shall participate in the assessment of the applicant technical service, including the on-site assessment. The designating type-approval authority of the Member State in which the applicant technical service has requested to be designated shall give the joint assessment team all necessary assistance and provide timely access to all documentation necessary to assess the applicant technical service.

5. In cases where the assessment is carried out by the type-approval authority that designates technical services which apply to perform tests exclusively for national individual vehicle approvals in accordance with Article 45, the type-approval authority of the Member State in which the applicant technical service has requested to be designated shall be exempt from the obligation to appoint a joint assessment team. The technical services which are only checking the correct installation of components on categories O_1 and O_2 shall also be exempt from assessment.

6. If the technical service has requested to be designated by one or more type-approval authorities from Member States other than the Member State of its establishment in accordance with Article 74(2), the assessment shall be carried out only once, provided that the entire scope of the technical service's designation has been covered in that assessment.

7. The joint assessment team shall raise findings regarding non-compliance of the applicant technical service with the requirements laid down in Articles 68 to 72, in Articles 80 and 81 and in Appendix 2 to Annex III during the assessment process. Such findings shall be discussed within the joint assessment team.

▼B

8. The joint assessment team shall produce after the on-site assessment a report setting out the extent to which the applicant technical service complies with the requirements laid down in Articles 68 to 72, in Articles 80 and 81 and in Appendix 2 to Annex III.

9. The report referred to in paragraph 8 shall contain a summary of any identified non-compliances, together with a recommendation as to whether the applicant may be designated as technical service.

10. The type-approval authority shall notify to the Commission the names and the expertise of their representatives who are to participate in each joint assessment team.

11. The type-approval authority of the Member State where the applicant technical service has requested to be designated shall send the report on the outcome of the assessment in accordance with the procedures laid down in Appendix 2 to Annex III, to the Commission and, upon request, to the type-approval authorities of the other Member States. That report shall include documentary evidence regarding the competence of the technical service and the arrangements that the type-approval authority has in place to regularly monitor the technical service.

12. The type-approval authorities of the other Member States and the Commission may review the assessment report and the documentary evidence, raise questions or concerns and request further documentary evidence within one month from the date of reception of the assessment report and the documentary evidence.

13. The type-approval authority of the Member State where the applicant technical service has requested to be designated shall respond to the questions, concerns and requests for further documentary evidence within four weeks following their receipt.

14. Within four weeks following the receipt of the response referred to in paragraph 13, the type-approval authorities of the other Member States or the Commission may individually or jointly address recommendations to the type-approval authority of the Member State where the applicant technical service has requested to be designated. That type-approval authority shall take account of the recommendations when it takes the decision on the designation of the technical service. Where that type-approval authority decides not to follow the recommendations addressed by the other Member States or the Commission, it shall give the reasons therefor within two weeks after taking its decision.

15. The validity of the designation of technical services shall be limited to five years.

16. The type-approval authority that intends to be designated as a technical service in accordance with Article 68(2) shall document compliance with this Regulation through an assessment conducted by independent auditors. Those auditors may be from within the same organisation provided that they are managed autonomously from the personnel undertaking the assessed activity, and provided that they comply with the requirements laid down in Appendix 2 to Annex III.

▼B

Article 74

Notification to the Commission concerning designation of technical services

1. The type-approval authorities shall notify to the Commission the name, the address, including the electronic address, the responsible persons and the category of activities of every technical service that they have designated. The notification shall clearly specify the scope of the designation, the conformity assessment activities and procedures, the type of vehicles, systems, components and separate technical units, and the subjects listed in Annex II, for which the technical services have been designated, as well as any subcontractors or subsidiaries of the technical services, and any subsequent modifications to any of those details.

Such notification shall be made before the designated technical service concerned conducts any activity referred to in Article 68(1).

2. A technical service may be designated by one or more type-approval authorities of Member States other than the Member State of its establishment, provided that the entire scope of the designation by the type-approval authority is covered by an accreditation issued in accordance with Article 73(3), or by an assessment carried out in accordance with Article 73(4).

3. The Commission shall publish on its website, and keep up-to-date, a list with contact details of the designated technical services, their subcontractors and their subsidiaries that have been notified to it in accordance with this Article.

Article 75

Changes to and renewal of designations of technical services

1. Where the type-approval authority has ascertained or has been informed that a technical service no longer complies with the requirements laid down in this Regulation, that type-approval authority shall restrict, suspend or withdraw the designation, as appropriate, depending on the seriousness of the failure to comply with those requirements.

The type-approval authority shall immediately notify to the Commission and the type-approval authorities of the other Member States any restriction, suspension or withdrawal of a designation.

The Commission shall update the list referred to in Article 74(3) accordingly.

2. In the event of a restriction, suspension or withdrawal of the designation, or where the technical service has ceased its activity, the type-approval authority shall keep the files of that technical service available for the approval authorities or for the market surveillance authorities or transfer those files to another technical service chosen by the manufacturer in agreement with that technical service.

▼B

3. The type-approval authority shall assess within three months of the notification referred to in the second subparagraph of paragraph 1 whether the non-compliance of the technical service has an impact on EU type-approval certificates issued on the basis of the inspection and test reports issued by the technical service subject of the change in designation and inform the other type-approval authorities and the Commission accordingly.

Within two months after having notified the changes to the designation, the type-approval authority shall submit a report on its findings regarding the non-compliance to the Commission and the other type-approval authorities. Where necessary to ensure the safety of vehicles, systems, components or separate technical units already placed on the market, the designating type-approval authority shall instruct the type-approval authorities concerned to suspend or withdraw within a reasonable period of time, any EU type-approval certificates which were unduly issued.

4. Where the designation of technical services has been restricted, suspended or withdrawn, the EU type-approval certificates which were issued on the basis of inspection and test reports issued by those technical services shall remain valid unless those type-approvals become invalid in accordance with point (f) of Article 35(2).

5. Extensions of the scope of the technical service's designation that lead to the designation of an additional category of activities referred to in Article 68(1) shall be assessed in accordance with the procedure set out in Article 73.

Extensions of the scope of a technical service's designation only for the regulatory acts listed in Annex II may be carried out in accordance with the procedures laid down in Appendix 2 to Annex III, and subject to the notification referred to in Article 74.

6. The designation of a technical service shall only be renewed after the type-approval authority has verified that the technical service continues to comply with the requirements of this Regulation. That assessment shall be carried out in accordance with the procedure set out in Article 73.

Article 76

Monitoring of technical services

1. The designating type-approval authority shall continuously monitor the technical services to ensure compliance with the requirements laid down in Articles 68 to 72, in Articles 80 and 81 and in Appendix 2 to Annex III.

The first subparagraph of this paragraph shall not apply to any activities of technical services which are monitored by accreditation bodies in accordance with Article 67(1) for the purposes of ensuring compliance with the requirements laid down in Articles 68 to 72, in Articles 80 and 81 and in Appendix 2 to Annex III.

▼B

Technical services shall supply on request all relevant information and documents that are required to enable the designating type-approval authority or national accreditation body to verify compliance with those requirements.

Technical services shall inform the designating type-approval authority or national accreditation body without delay of any changes, in particular regarding their personnel, facilities, subsidiaries or subcontractors, which may affect compliance with the requirements set out in Articles 68 to 72, in Articles 80 and 81 and in Appendix 2 to Annex III, or their ability to perform the conformity assessment tasks relating to the vehicles, systems, components and separate technical units for which they have been designated.

2. Technical services shall respond without delay to requests by a type-approval authority or by the Commission in relation to the conformity assessments they have carried out.

3. The designating type-approval authority shall ensure that the technical service carries out its obligation laid down in paragraph 2 of this Article, unless there is a legitimate reason for not doing so.

Where that type-approval authority acknowledges a legitimate reason, it shall inform the Commission thereof.

The Commission shall consult the Member States without delay. On the basis of that consultation, the Commission shall adopt implementing acts to decide if the legitimate reason is justified or not. Those implementing acts shall be adopted in accordance with the examination procedure referred to in Article 83(2).

The technical service and the designating type-approval authority may request that any information that is transmitted to the type-approval authority of another Member State or to the Commission shall be treated confidentially.

4. At least every 30 months, the designating type-approval authority shall assess whether each technical service under its responsibility continues to satisfy the requirements set out in Articles 68 to 72, in Articles 80 and 81 and in Appendix 2 to Annex III. That assessment shall include an on-site assessment of each technical service under its responsibility.

Within two months after finalising the assessment of the technical service, each Member State shall report to the Commission and to the other Member States on its monitoring activities. Those reports shall contain a summary of the assessment, which shall be made publicly available.

Article 77

Challenge to the competence of technical services

1. The Commission, in cooperation with the type-approval authority of the Member State concerned, shall investigate all cases where concerns have been brought to its attention regarding the competence of a technical service or the continued compliance by a technical service with the requirements and responsibilities to which it is subject under this Regulation. The Commission may also commence such investigations on its own initiative.

▼B

The Commission shall investigate the responsibility of the technical service in the case where it is demonstrated or where there are justified grounds for considering that a type-approval has been granted on the basis of false data, that the test results have been falsified or that data or technical specifications have been withheld that would have led to the refusal to grant the type-approval.

2. The Commission shall consult the designating type-approval authority, as part of the investigation referred to in paragraph 1. That type-approval authority shall provide the Commission, upon request, with all relevant information relating to the performance and the compliance with the requirements concerning independence and competence of the technical service concerned.

3. The Commission shall ensure that all sensitive information obtained in the course of its investigations is treated confidentially.

4. Where the Commission ascertains that a technical service does not comply or no longer complies with the requirements for its designation, or that it is responsible for any of the situations referred to in paragraph 1, it shall inform the Member State of the designating type-approval authority thereof.

The Commission shall request that Member State to take restrictive measures, including the restriction, suspension or withdrawal of the designation, where necessary.

Where a Member State fails to take the necessary restrictive measures, the Commission may adopt implementing acts to decide to restrict, suspend or withdraw the designation of the technical service concerned. Those implementing acts shall be adopted in accordance with the examination procedure referred to in Article 83(2). The Commission shall notify the Member State concerned of those implementing acts and shall update the information published referred to in Article 74(3) accordingly.

Article 78

Exchange of information on assessment, designation and monitoring of technical services

1. Type-approval authorities shall consult each other and the Commission on questions with general relevance with regard to the implementation of the requirements set out in this Regulation in relation with the assessment, designation and monitoring of technical services.

2. Type-approval authorities shall communicate to each other and the Commission the model for the assessment check-list used in accordance with Article 73(2) by 5 July 2020 and, thereafter, the adaptations made to that check-list, until the Commission has adopted a harmonised assessment check-list. The Commission is empowered to adopt implementing acts to establish the template of the harmonised assessment check-list. Those implementing acts shall be adopted in accordance with the examination procedure referred to in Article 83(2).

▼B

3. Where the assessment reports referred to in Article 73(8) indicate discrepancies in the general practice of type-approval authorities, Member States or the Commission may request an exchange of information.

The exchange of information shall be coordinated by the Forum.

Article 79

Cooperation with national accreditation bodies

1. Where the designation of a technical service is based on accreditation within the meaning of Regulation (EC) No 765/2008, the national accreditation body and the type-approval authority shall fully cooperate and shall exchange relevant information in compliance with Regulation (EC) No 765/2008, including incident reports and other information that relate to matters under the control of the technical service when that information is relevant for the assessment of the performance of the technical service.

2. Member States shall ensure that type-approval authority of the Member State in which the technical service is established keeps the national accreditation body in charge of the accreditation of a particular technical service informed of any findings that are relevant to the accreditation. The national accreditation body shall inform the type-approval authority of the Member State in which the technical service is established of its findings.

Article 80

Operational obligations of technical services

1. Technical services shall carry out the activities for which they have been designated in accordance with Article 68(1).

2. At all times, technical services shall:

(a) allow the designating type-approval authority to witness the performance of the technical service during testing for type-approval; and

(b) where requested, provide the designating type-approval authority with information on the categories of activities for which they have been designated.

3. Where a technical service finds that a manufacturer does not comply with the requirements laid down in this Regulation, it shall report this non-compliance to the type-approval authority in order for that type-approval authority to require the manufacturer to take appropriate corrective measures. The type-approval authority shall refuse to issue a type-approval certificate where those appropriate corrective measures have not been taken.

Article 81

Information obligations of technical services

1. Technical services shall inform the designating type-approval authority of the following:

▼B

(a) any non-conformity encountered which may require the refusal, restriction, suspension or withdrawal of a type-approval certificate;

(b) any circumstances affecting the scope of and conditions for their designation;

(c) any request for information which they have received from market surveillance authorities regarding their activities.

2. Upon request from the designating type-approval authority, technical services shall provide information on the activities within the scope of their designation or on any other activity they have performed, including cross-border activities and subcontracting.

CHAPTER XVI

DELEGATED AND IMPLEMENTING POWERS

Article 82

Exercise of the delegation

1. The power to adopt delegated acts is conferred on the Commission subject to the conditions laid down in this Article.

2. The power to adopt delegated acts referred to in Article 4(2), Article 5(3), Article 26(3), Article 30(8), Article 31(8), Article 41(5), Article 44(7), Article 55(3) and (4), Article 57(2), Article 61(11), Article 70(3), Article 72(3) and Article 85(2) shall be conferred on the Commission for a period of five years from 4 July 2018. The Commission shall draw up a report in respect of the delegation of power not later than nine months before the end of the five-year period. The delegation of power shall be tacitly extended for periods of an identical duration, unless the European Parliament or the Council opposes such extension not later than three months before the end of each period.

3. The delegation of power referred to in Article 4(2), Article 5(3), Article 26(3), Article 30(8), Article 31(8), Article 41(5), Article 44(7), Article 55(3) and (4), Article 57(2), Article 61(11), Article 70(3), Article 72(3) and Article 85(2) may be revoked at any time by the European Parliament or by the Council. A decision to revoke shall put an end to the delegation of the power specified in that decision. It shall take effect the day following the publication of the decision in the *Official Journal of the European Union* or at a later date specified therein. It shall not affect the validity of any delegated acts already in force.

4. Before adopting a delegated act, the Commission shall consult experts designated by each Member State in accordance with the principles laid down in the Interinstitutional Agreement of 13 April 2016 on Better Law-Making.

▼B

5. As soon as it adopts a delegated act, the Commission shall notify it simultaneously to the European Parliament and to the Council.

6. A delegated act adopted pursuant to Article 4(2), Article 5(3), Article 26(3), Article 30(8), Article 31(8), Article 41(5), Article 44 (7), Article 55(3) and (4), Article 57(2), Article 61(11), Article 70 (3), Article 72(3) and Article 85(2) shall enter into force only if no objection has been expressed either by the European Parliament or the Council within a period of two months of notification of that act to the European Parliament and the Council or if, before the expiry of that period, the European Parliament and the Council have both informed the Commission that they will not object. That period shall be extended by two months at the initiative of the European Parliament or of the Council.

Article 83

Committee procedure

1. The Commission shall be assisted by the Technical Committee — Motor Vehicles (TCMV). That committee shall be a committee within the meaning of Regulation (EU) No 182/2011.

2. Where reference is made to this paragraph, Article 5 of Regulation (EU) No 182/2011 shall apply.

Where the committee delivers no opinion, the Commission shall not adopt the draft implementing act and the third subparagraph of Article 5(4) of Regulation (EU) No 182/2011 shall apply.

CHAPTER XVII

FINAL PROVISIONS

Article 84

Penalties

▼M5

1. Member States shall lay down the rules on penalties applicable to infringements by economic operators, independent operators, and technical services of this Regulation and shall take all measures necessary to ensure that they are implemented. The penalties provided for shall be effective, proportionate and dissuasive. In particular, those penalties shall be proportionate to the seriousness of the non-compliance and to the number of non-compliant vehicles, systems, components or separate technical units made available on the market of the Member State concerned. Member States shall notify the Commission of those rules and of those measures and shall notify it without delay of any subsequent amendment affecting them.

▼B

2. The types of infringements by economic operators and technical services subject to penalties shall be at least the following:

(a) making false declarations during approval procedures or corrective or restrictive measures being imposed in accordance with Chapter XI;

▼B

(b) falsifying test results for type-approval or for market surveillance;

(c) withholding data or technical specifications that could lead to the recall of vehicles, systems, components and separate technical units, or to the refusal or withdrawal of EU type-approval certificate;

(d) non-compliance by technical services in respect of the requirements for their designation.

▼M5

3. In addition to the types of infringements set out in paragraph 2, the types of infringements by economic operators that are also subject to penalties shall be at least the following:

(a) refusal to provide access to information;

(b) making available on the market vehicles, systems, components or separate technical units subject to approval without such approval, or falsifying documents, certificates of conformity, statutory plates or approval marks with that intention;

(c) tampering with the vehicle and its systems.

3a. In additional to the types of infringements set out in paragraphs 2 and 3, the types of infringements by manufacturers that are also subject to penalties shall be at least the following:

(a) falsifying test results for in-service conformity under emission type-approval;

(b) designing, constructing and assembling vehicles with manipulation devices or manipulation strategies, which cause a non-compliant vehicle to appear compliant with this Regulation;

(c) designing, constructing and assembling vehicles of categories M_1, M_2, M_3, N_1, N_2 and N_3 without the required excess exhaust emissions driver warning systems or low-reagent driver warning systems.

3b. The types of infringements by independent operators subject to penalties shall include at least tampering with the vehicle and its systems.

▼B

4. Member States shall report to the Commission every year on the penalties they have imposed in the preceding year. If no penalties were imposed in a given year, Member States shall not be required to report to the Commission.

5. Each year, the Commission shall elaborate a summary report on the penalties imposed by Member States. That report may include recommendations for Members States and shall be submitted to the Forum.

Article 85

Administrative fines in support of corrective and restrictive measures at Union level

1. When the Commission takes decisions in accordance with Article 53, it may impose administrative fines upon the concerned economic operators for non-compliance of the vehicle, system, component or separate technical unit with the requirements laid down in this Regulation. The administrative fines provided for shall be effective, proportionate and dissuasive. In particular the fines shall be

▼B

proportionate to the number of non-compliant vehicles registered in the Union market, or the number of non-compliant systems, components or separate technical unit made available on the Union market.

The administrative fines imposed by the Commission shall not be in addition to the penalties imposed by the Member States in accordance with Article 84 for the same infringement. The administrative fines imposed by the Commission shall not exceed EUR 30 000 per non-compliant vehicle, system, component or separate technical unit.

The Commission may not bring, start afresh or continue proceedings under this Article against economic operators for infringements of this Regulation for which the concerned economic operators have been penalised or declared not liable in accordance with Article 84 by an earlier decision that can no longer be challenged.

2. The Commission shall adopt, on the basis of the principles set out in paragraph 3 of this Article, delegated acts in accordance with Article 82, supplementing this Regulation by laying down the procedure for, and methods for the calculation and collection of, the administrative fines referred to in paragraph 1 of this Article.

3. The delegated acts referred to in paragraph 2 shall respect the following principles:

(a) the procedure by the Commission shall respect the right to good administration, and in particular the right to be heard and the right to have access to the file, while respecting the legitimate interests of confidentiality and of commercial secrets;

(b) in calculating the appropriate administrative fine, the Commission shall be guided by the principles of effectiveness, proportionality and dissuasiveness, taking into consideration, where relevant, the seriousness and the effects of the infringement, the good faith of the economic operator, the degree of diligence and cooperation of the economic operator, the repetition, frequency or duration of the infringement as well as prior sanctions imposed on the same economic operator;

(c) administrative fines shall be collected without undue delay by fixing deadlines for the payment and, as appropriate, including the possibility of splitting payments into several instalments and phases.

4. The amounts of administrative fines shall be considered as revenue for the general budget of the Union.

Article 86

Amendments to Regulation (EC) No 715/2007

1. Regulation (EC) No 715/2007 is amended as follows:

(1) The title is replaced by the following:

‘Regulation (EC) No 715/2007 of the European Parliament and of the Council of 20 June 2007 on type approval of motor vehicles with respect to emissions from light passenger and commercial vehicles (Euro 5 and Euro 6)’;

▼B

(2) in Article 1, paragraph 2 is replaced by the following:

‘2. In addition, this Regulation lays down rules for in-service conformity, the durability of pollution control devices, vehicle on-board diagnostic (OBD) systems and the measurement of fuel consumption.’;

(3) in Article 3, points 14 and 15 are deleted;

(4) Chapter III is deleted;

(5) in Article 13(2), point (e) is deleted.

2. References to the deleted provisions of Regulation (EC) No 715/2007 shall be construed as references to this Regulation and shall be read in accordance with the correlation table set out in point 1 of Annex XI to this Regulation.

Article 87

Amendments to Regulation (EC) No 595/2009

1. Regulation (EC) No 595/2009 is amended as follows:

(1) The title is replaced by the following:

‘Regulation (EC) No 595/2009 of the European Parliament and of the Council of 18 June 2009 on type-approval of motor vehicles and engines with respect to emissions from heavy duty vehicles (Euro VI) and amending Regulation (EC) No 715/2007 and Directive 2007/46/EC and repealing Directives 80/1269/EEC, 2005/55/EC and 2005/78/EC’;

(2) in Article 1, second paragraph is replaced by the following:

‘This Regulation also lays down rules for in-service conformity of vehicles and engines, the durability of pollution control devices, vehicle on-board diagnostic (OBD) systems and the measurement of fuel consumption and CO_2 emissions.’;

(3) in Article 3, points 11 and 13 are deleted;

(4) Article 6 is deleted;

(5) in Article 11(2), point (e) is deleted.

2. References to the deleted provisions of Regulation (EC) No 595/2009 shall be construed as references to this Regulation and shall be read in accordance with the correlation table set out in point 2 of Annex XI to this Regulation.

Article 88

Repeal of Directive 2007/46/EC

Directive 2007/46/EC is repealed with effect from 1 September 2020.

References to Directive 2007/46/EC shall be construed as references to this Regulation and shall be read in accordance with the correlation table set out in point 3 of Annex XI to this Regulation.

▼B

Article 89

Transitional provisions

1. This Regulation shall not invalidate any whole-vehicle type-approval or EU type-approval granted to vehicles or to systems, components or separate technical units by 31 August 2020.

2. Approval authorities shall grant extensions and revisions of whole-vehicle type-approvals and EU type-approvals to the vehicles, systems, components or separate technical units referred to in paragraph 1 of this Article in accordance with Articles 33 and 34.

3. Technical services already designated before 4 July 2018 shall be subject to the assessment referred to in Article 73.

The designation of technical services already designated before 4 July 2018 shall be renewed by 5 July 2022 where those technical services comply with the relevant requirements set out in this Regulation.

The validity of the designation of technical services made before 4 July 2018 shall terminate by 5 July 2022.

Article 90

Reporting

1. By 1 September 2025, Member States shall inform the Commission of the application of the type-approval and market surveillance procedures laid down in this Regulation.

2. By 1 September 2026, on the basis of the information supplied under paragraph 1 of this Article, the Commission shall submit an evaluation report to the European Parliament and to the Council on the application of this Regulation, including on the functioning of the compliance verification in accordance with Article 9.

Article 91

Entry into force and application

This Regulation shall enter into force on the twentieth day following that of its publication in the *Official Journal of the European Union*.

It shall apply from 1 September 2020.

However, from 5 July 2020, national authorities shall not refuse to grant EU type-approval or national type-approval for a new type of vehicle, or prohibit registration, placing on the market or entry into service of a new vehicle where the vehicle concerned complies with this Regulation, if a manufacturer so requests.

This Regulation shall be binding in its entirety and directly applicable in all Member States.

▼B

LIST OF ANNEXES

Annex I	General definitions, criteria for vehicle categorisation, types of vehicle and types of bodywork
Appendix 1:	Procedure for checking whether a vehicle can be categorised as off-road vehicle
Appendix 2:	Digits used to supplement the codes to be used for various kinds of bodywork
Annex II	Requirements for the purpose of EU type-approval of vehicles, systems, components or separate technical units
Part I	Regulatory acts for EU type-approval of vehicles produced in unlimited series
Appendix 1:	Regulatory acts for EU type-approval of vehicles produced in small series pursuant to Article 41
Appendix 2:	Requirements for EU individual vehicle approval pursuant to Article 44
Part II	List of UN Regulations recognised as an alternative to the Directives or Regulations referred to in Part I
Part III	List of regulatory acts setting out the requirements for the purpose of EU type-approval of special purpose vehicles
Appendix 1:	Motor-caravans, ambulances and hearses
Appendix 2:	Armoured vehicles
Appendix 3:	Wheelchair accessible vehicles
Appendix 4:	Other special purpose vehicles (including special group, multi-equipment carrier and trailer caravans)
Appendix 5:	Mobile cranes
Appendix 6:	Exceptional load transport vehicles
Annex III	Procedures to be followed with respect to EU type-approval
Appendix 1:	Standards with which the technical services referred to in Article 68 have to comply
Appendix 2:	Procedure for the assessment of the technical services
Annex IV	Conformity of production procedures
Annex V	Small series and end-of-series limits

▼B

Annex VI	List of parts or equipment that may pose a serious risk to the correct functioning of systems that are essential for the safety of the vehicle or its environmental performance, their performance requirements of such parts and equipment, the appropriate test procedures and marking and packaging provisions
Annex VII	Regulatory acts for which a manufacturer may be designated as a technical service
Appendix:	Designation of an in-house technical service of a manufacturer as technical service and subcontracting
Annex VIII	Conditions for the use of virtual testing methods by a manufacturer or a technical service
Appendix 1:	General conditions for the use of virtual testing methods
Appendix 2:	Specific conditions for the use of virtual testing methods
Appendix 3:	Validation process
Annex IX	Procedures to be followed during multi-stage type-approval
Appendix:	Model of the manufacturer's additional plate
Annex X	Access to vehicle OBD information and vehicle repair and maintenance information
Appendix 1:	Manufacturer's certificate on access to vehicle OBD information and vehicle repair and maintenance information
Appendix 2:	Vehicle OBD information
Annex XI	Correlation table

▼B

ANNEX I

GENERAL DEFINITIONS, CRITERIA FOR VEHICLE CATEGORISATION, TYPES OF VEHICLE AND TYPES OF BODYWORK

INTRODUCTORY PART

Definitions and general provisions

1. Definitions

1.1. ‘Seating position’ means any location capable of accommodating one person seated who is at least as large as:

(a) the manikin of the 50th percentile adult male in the case of the driver;

(b) the manikin of the 5th percentile adult female in all other cases.

1.2. ‘Seat’ means a complete structure with trim, integral or not with the vehicle body structure, which is intended to seat one person.

It includes both an individual seat and a bench seat, as well as folding seats and removable seats.

1.3. ‘Goods’ means primarily any movable things.

It includes products in bulk, manufactured goods, liquids, living animals, crops, indivisible loads.

1.4. ‘Maximum mass’ means the ‘technically permissible maximum laden mass’.

2. General provisions

2.1. Number of seating positions

2.1.1. The requirements regarding the number of seating positions apply to seats that are designed for use when the vehicle is travelling on the road.

2.1.2. They do not apply to seats that are designed for use when the vehicle is stationary and which are clearly identified to users either by means of a pictogram or a sign with an appropriate text.

2.1.3. The following requirements apply for the counting of the seating positions:

(a) each individual seat shall be counted as one seating position;

(b) in the case of a bench seat, any space having a width of at least 400 mm measured at the seat cushion level shall be counted as one seating position.

This condition shall not prevent the manufacturer from using the general provisions referred to in point 1.1;

(c) however, a space as referred to in point (b) shall not be counted as one seating position where:

(i) the bench seat includes features that prevent the bottom of the manikin from sitting in a natural way - for example: the presence of a fixed console box, an unpadded area or an interior trim interrupting the nominal seating surface;

▼B

(ii) the design of the floor pan located immediately in front of a presumed seating position (for example the presence of a tunnel) prevents the feet of the manikin from being positioned in a natural way.

2.1.4. With respect to vehicles covered by UN Regulations No 66 and No 107, the dimension referred to in point 2.1.3(b) shall be aligned with the minimum space required for one person in relation to the various classes of vehicles.

2.1.5. When seat anchors for a removable seat are present in a vehicle, the removable seat shall be counted in the determination of the number of the seating positions.

2.1.6. An area intended for an occupied wheelchair shall be regarded as one seating position.

2.1.6.1. This provision shall be without prejudice to the requirements of paragraphs 3.6.1 and 3.7 of Annex 8 to UN Regulation No 107.

2.2. Maximum mass

2.2.1. In the case of a tractor unit for semi-trailer, the maximum mass to be considered for classifying the vehicle shall include the maximum mass of the semi-trailer borne by the fifth wheel coupling.

2.2.2. In the case of a motor vehicle that can tow a centre-axle trailer or a rigid drawbar trailer, the maximum mass to be considered for classifying the motor vehicle shall include the maximum mass transferred to the towing vehicle by the coupling.

2.2.3. In the case of a semi-trailer, a centre-axle trailer and a rigid drawbar trailer, the maximum mass to be considered for classifying the vehicle shall correspond to the maximum mass transmitted to the ground by the wheels of an axle or group of axles when coupled to the towing vehicle.

2.2.4. In the case of a converter dolly, the maximum mass to be considered for classifying the vehicle shall include the maximum mass of the semi-trailer borne by the fifth wheel coupling.

2.3. Special equipment

2.3.1. Vehicles fitted primarily with fixed equipment such as machinery or apparatus shall be regarded as N or O category.

2.4. Units

2.4.1. Unless otherwise stated any unit of measurement and associated symbol shall conform to Council Directive 80/181/EEC ([1]).

3. Categorisation into vehicle categories

3.1. The manufacturer is responsible for the categorisation of a type of vehicle into a specific category.

For such purposes, all the relevant criteria described in this Annex shall be met.

([1]) Council Directive 80/181/EEC of 20 December 1979 on the approximation of the laws of the Member States relating to units of measurement and on the repeal of Directive 71/354/EEC (OJ L 39, 15.2.1980, p. 40).

▼B

3.2. The approval authority may request from the manufacturer appropriate additional information with the aim of demonstrating that a type of vehicle needs to be categorised as special purpose vehicle in the special group ('SG Code').

PART A

Criteria for vehicle categorisation

1. Vehicle categories

For the purposes of EU type-approval and national type-approval, as well as for EU individual vehicle approval and national individual vehicle approval, vehicles shall be categorised in accordance with the classification referred to in Article 4.

Approval can only be granted for the categories referred to in Article 4(1).

2. Vehicle subcategories

2.1. Off-road vehicles

'Off-road vehicle (ORV)' means a vehicle that belongs to category M or N, having specific technical features which permit its use off the normal roads.

For those categories of vehicles, the letter 'G' shall be added as suffix to the letter and numeral identifying the vehicle category.

The criteria for the subcategorisation of vehicles as ORV are specified in point 4 of this Part.

2.2. Special purpose vehicles (SPV)

2.2.1. For incomplete vehicles that are intended to fall into the SPV subcategory, the letter 'S' shall be added as suffix to the letter and numeral identifying the vehicle category.

The various types of special purpose vehicles are defined and listed in point 5.

2.3. Off road special purpose vehicle

2.3.1. 'Off road special purpose vehicle (ORV-SPV)' means a vehicle that belongs either to category M or N having the specific technical features referred to in points 2.1 and 2.2.

For those categories of vehicles, the letter 'G' shall be added as suffix to the letter and numeral identifying the vehicle category.

Moreover, for incomplete vehicles that are intended to fall into the SPV subcategory, the letter 'S' shall be added as second suffix.

3. Criteria for the categorisation of vehicles in category N

3.1. The categorisation of a type of vehicle in category N shall be based on the technical features of the vehicle as referred to in points 3.2 to 3.6.

3.2. As a matter of principle, the compartment(s) where all the seating positions are located, shall be completely separated from the loading area.

▼B

3.3. By way of derogation from the requirements of point 3.2, persons and goods may be transported in the same compartment under the condition that the loading area is provided with securing devices designed to protect persons transported against the displacement of the load during driving, including severe braking and cornering.

3.4. Securing devices - lashing devices - intended for securing the load as required in point 3.3 as well as partitioning systems, intended for vehicles up to 7,5 tonnes shall be designed in accordance with the provisions of sections 3 and 4 of international standard ISO 27956:2009 'Road vehicles – Securing of cargo in delivery vans – Requirements and test methods'.

3.4.1. The requirements referred to in point 3.4 may be verified by a statement of compliance provided by the manufacturer.

3.4.2. As an alternative to the requirements of point 3.4, the manufacturer may demonstrate to the satisfaction of the approval authority that the securing devices fitted show an equivalent level of protection as provided in the referred standard.

3.5. The number of seating positions excluding the driver's seating position shall not exceed:

(a) 6 in the case of N_1 vehicles;

(b) 8 in the case of N_2 or N_3 vehicles.

3.6. Vehicles shall show a goods-carrying capacity equal or higher than the person-carrying capacity expressed in kg.

3.6.1. For such purposes, the following equations shall be satisfied in all configurations, in particular when all seating positions are occupied:

(a) when $N = 0$:

$$P - M \geq 100 \text{ kg}$$

(b) when $0 < N \leq 2$:

$$P - (M + N \times 68) \geq 150 \text{ kg};$$

(c) when $N > 2$:

$$P - (M + N \times 68) \geq N \times 68;$$

where the letters have the following meaning:

'P' is the technically permissible maximum laden mass;

'M' is the mass in running order;

'N' is the number of seating positions excluding the driver's seating position.

3.6.2. The mass of equipment that is fitted to the vehicle in order to accommodate goods (e.g. tank, bodywork, etc.), to handle goods (e.g. crane, lift, etc.) and to secure goods (e.g. cargo securing devices) shall be included in M.

▼B

3.6.3. The mass of equipment that is not used for the purposes referred to in point 3.6.2 (such as a compressor, a winch, an electric power generator, broadcasting equipment, etc.) shall not be included in M for the purposes of the application of the formulae referred to in point 3.6.1.

3.7. The requirements referred to in points 3.2 to 3.6 shall be met for all variants and versions within the type of vehicle.

3.8. Criteria for the categorisation of vehicles as N_1.

3.8.1. A vehicle shall be categorised as N_1 when all the applicable criteria are met.

When one or more of the criteria are not met, the vehicle shall be categorised as M_1.

3.8.2. In addition to the general criteria referred to in points 3.2 to 3.6, the criteria specified in this point shall be met for the categorisation of vehicles for which the compartment where the driver is located and the load are within a single unit (i.e. bodywork 'BB').

3.8.2.1. The fact that a wall or a partition, complete or partial, is fitted between a seat row and the cargo area shall not rule out the obligation to meet the required criteria.

3.8.2.2. The criteria shall be as follows:

(a) the loading of the goods shall be possible by a rear door, a tailgate or a side-door designed and constructed for that purposes;

(b) in the case of a rear door or a tailgate, the loading aperture shall meet the following requirements:

(i) in the case the vehicle is fitted with only one row of seats or with only the driver seat, the minimum height of the loading aperture shall be at least 600 mm;

(ii) in the case the vehicle is fitted with two or more rows of seats, the minimum height of the loading aperture shall be at least 800 mm and the aperture shall show a surface of at least 12 800 cm^2;

(c) The cargo area shall meet the following requirements:

'cargo area' means the part of the vehicle located behind the row (s) of seats or behind the driver seat when the vehicle is fitted with only one driver seat;

(i) the loading surface of the cargo area shall be generally flat;

(ii) where the vehicle is fitted with only one row of seats or with one seat, the minimum length of the cargo area shall be at least 40 % of the wheelbase;

(iii) where the vehicle is fitted with two or more rows of seats, the minimum length of the cargo area shall be at least 30 % of the wheelbase.

Where the seats of the last row of seats can be easily removed from the vehicle without the use of special tools, the requirements regarding the length of the cargo area shall be met with all the seats installed in the vehicle;

▼B

(iv) the requirements regarding the length of the cargo area shall be met when the seats of the first row or of the last row, as the case may be, are upright in their normal position for use by the vehicle occupants.

3.8.2.3. Specific conditions for measurement

3.8.2.3.1. Definitions

(a) 'Height of the loading aperture', means the vertical distance between two horizontal planes tangent respectively to the highest point of the lower part of the doorway and the lowest point of the upper part of the doorway;

(b) 'Surface of the loading aperture' means the greatest surface of the orthogonal projection on a vertical plane, perpendicular to the centreline of the vehicle, of the maximum aperture permitted when the rear door(s) or tailgate is (are) wide open;

(c) 'Wheelbase', for the purposes of application of the formulae in points 3.8.2.2 and 3.8.3.1, means the distance between:

(i) the centreline of the front axle and the centreline of the second axle in the case of a two axle vehicle; or

(ii) the centreline of the front axle and the centreline of a virtual axle equally distant from the second and third axle in the case of a three axle vehicle.

3.8.2.3.2. Seat adjustments

(a) The seats shall be adjusted at their rear outermost positions;

(b) The seat back, if adjustable, shall be adjusted as to accommodate the three-dimensional H-point machine at a torso angle of 25 degrees;

(c) The seat back, if not adjustable, shall be in the position designed by the vehicle manufacturer;

(d) When the seat is adjustable in height, it shall be adjusted to its lowest position.

3.8.2.3.3. Vehicle conditions

(a) The vehicle shall be in loaded conditions corresponding to its maximum mass;

(b) The vehicle shall be with its wheels straight ahead.

3.8.2.3.4. The requirements of point 3.8.2.3.2 shall not apply when the vehicle is fitted with a wall or a partition.

3.8.2.3.5. Measurement of the length of the cargo area

(a) When the vehicle is not fitted with a partition or a wall, the length shall be measured from a vertical plane tangent to the rear outermost point of the top of the seat back to the rear internal pane or door or tailgate, in closed position;

(b) When the vehicle is fitted with a partition or a wall, the length shall be measured from a vertical plane tangent to the rear outermost point of the partition or the wall to the rear internal pane or door or tailgate, as the case may be, in closed position;

▼B

(c) The requirements concerning the length shall be fulfilled at least along a horizontal line situated in the longitudinal vertical plane passing through the centreline of the vehicle, at the level of the load floor.

3.8.3. In addition to the general criteria referred to in points 3.2 to 3.6, the criteria specified in this point shall be met for the categorisation of vehicles for which the compartment where the driver is located and the load are not within a single unit (i.e. bodywork 'BE').

3.8.3.1. Where the vehicle is fitted with an enclosure type body, the following shall apply:

(a) the loading of the goods shall be possible by a rear door, a tailgate or a panel or other means;

(b) the minimum height of the loading aperture shall be at least 800 mm and the aperture shall show a surface of at least 12 800 cm^2;

(c) The minimum length of the cargo area shall be at least 40 % of the wheelbase.

3.8.3.2. Where the vehicle is fitted with an open type cargo area, only the provisions referred to in points 3.8.3.1(a) and (c) shall apply.

3.8.3.3. For the application of the provisions referred to in point 3.8.3, the definitions in point 3.8.2.3.1 shall apply.

3.8.3.4. However, the requirements concerning the length of the cargo area shall be fulfilled along a horizontal line situated in the longitudinal plane passing through the centreline of the vehicle at the level of the load floor.

4. Criteria for the sub-categorisation of vehicles as off-road vehicles

4.1. M_1 or N_1 vehicles shall be subcategorised as off-road vehicles if they satisfy at the same time the following conditions:

(a) at least one front and at least one rear axle designed to be driven simultaneously irrespective of whether one powered axle can be disengaged;

(b) at least one differential locking mechanism or a mechanism having similar effect is fitted;

(c) they are able to climb at least a 25 % gradient as a solo vehicle;

(d) they satisfy five out of the following six requirements:

(i) the approach angle shall be at least 25 degrees;

(ii) the departure angle shall be at least 20 degrees;

(iii) the ramp angle shall be at least 20 degrees;

(iv) the ground clearance under the front axle shall be at least 180 mm;

(v) the ground clearance under the rear axle shall be at least 180 mm;

(vi) the ground clearance between the axles shall be at least 200 mm.

▼B

4.2. M_2, N_2 or M_3 vehicles the maximum mass of which does not exceed 12 tonnes shall be subcategorised as off-road vehicles if they satisfy either the condition set out in point (a) or the conditions set out in both points (b) and (c):

(a) all their axles are driven simultaneously, irrespective of whether one or more powered axles can be disengaged;

(b) (i) at least one front and at least one rear axle are designed to be driven simultaneously irrespective of whether one powered axle can be disengaged;

(ii) at least one differential locking mechanism or a mechanism having the same effect is fitted;

(iii) they are able to climb a 25 % gradient as a solo vehicle;

(c) they satisfy at least five out of the following six requirements if their maximum mass does not exceed 7,5 tonnes and at least four if their maximum mass exceeds 7,5 tonnes:

(i) the approach angle shall be at least 25 degrees;

(ii) the departure angle shall be at least 25 degrees;

(iii) the ramp angle shall be at least 25 degrees;

(iv) the ground clearance under the front axle shall be at least 250 mm;

(v) the ground clearance between axles shall be at least 300 mm;

(vi) the ground clearance under the rear axle shall be at least 250 mm.

4.3. M_3 or N_3 vehicles whose maximum mass exceeds 12 tonnes shall be subcategorised as off-road vehicles if they satisfy either the condition set out in point (a) or the conditions set out in both points (b) and (c):

(a) all their axles are driven simultaneously, irrespective of whether one or more powered axles can be disengaged;

(b) (i) at least half of the axles (or two axles out of the three in the case of a three axle vehicle and three axles in the case of a five axle vehicle) is designed to be driven simultaneously, irrespective of whether one powered axle can be disengaged;

(ii) there is at least one differential locking mechanism or a mechanism having similar effect;

(iii) they are able to climb a 25 % gradient as solo vehicle;

(c) they satisfy at least four out of the following six requirements:

(i) the approach angle shall be at least 25 degrees;

(ii) the departure angle shall be at least 25 degrees;

(iii) the ramp angle shall be at least 25 degrees;

(iv) the ground clearance under the front axle shall be at least 250 mm;

▼B

(v) the ground clearance between axles shall be at least 300 mm;

(vi) the ground clearance under the rear axle shall be at least 250 mm.

4.4. The procedure for checking compliance with the geometrical provisions referred to in this Part shall be set out in Appendix 1.

4.5. The requirements in points 4.1(a), 4.2(a), 4.2(b), 4.3(a), 4.3(b) on simultaneous driven axles are considered to have been fulfilled if one of the following conditions is fulfilled:

(a) the transmission of the tractive power to all axles is performed by mechanical means only which provides traction in heavy off-road; or

(b) each of the wheels of the axle in question is driven by an individual hydraulic or electric motor.

If the axles according to the requirements in points 4.1(a), 4.2(a), 4.2 (b), 4.3(a), 4.3(b) on simultaneous driven axles are not powered by mechanical means only, the propulsion of the individual wheels shall be designed for heavy off-road operation. In such case it shall be ensured that at least 75 % of total tractive power can be transmitted to the wheel in question when the tractive conditions under the other wheels do not allow to transmit the tractive power properly via these wheels.

The auxiliary drive system according to point 4.5(b) shall not allow to disengage the tractive power automatically until the vehicle reaches 75 % of the maximum vehicle design speed or reaches 65 km/h.

5. Special purpose vehicles

	Name	Code	Definition
5.1.	Motor caravan	SA	A vehicle of category M with living accommodation space which contains the following equipment as a minimum: (a) seats and table; (b) sleeping accommodation which may be converted from the seats; (c) cooking facilities; (d) storage facilities. This equipment shall be rigidly fixed to the living compartment. However, the table may be designed to be easily removable.
5.2.	Armoured vehicle	SB	A vehicle intended for the protection of conveyed persons or goods with anti-bullet armour plating.
5.3.	Ambulance	SC	A vehicle of category M intended for the transport of sick or injured persons and having special equipment for such purpose.
5.4.	Hearse	SD	A vehicle of category M intended for the transport of deceased persons and having special equipment for such purpose.
5.5.	Wheelchair accessible vehicle	SH	A vehicle of category M_1 constructed or converted specifically so that they accommodate one or more persons seated in their wheelchairs when travelling on the road.
5.6.	Trailer caravan	SE	A vehicle of category O as defined in term 3.2.1.3 of international standard ISO 3833:1977.

▼B

	Name	Code	Definition
5.7.	Mobile crane	SF	A vehicle of category N_3, not fitted for the carriage of goods, provided with a crane whose lifting moment is equal to or higher than 400 kNm.
5.8.	Special group	SG	A special purpose vehicle that does not enter in any of the definitions mentioned in this Part.
5.9.	Converter dolly	SJ	A vehicle of category O equipped with a fifth-wheel coupling to support a semi-trailer with a view to converting the latter into a trailer.
5.10.	Exceptional load transport trailer	SK	A vehicle of category O_4 intended for the transport of indivisible loads that is subject to speed and traffic restrictions because of its dimensions. Under this term are also included hydraulic modular trailers irrespective of the number of modules.
5.11.	Exceptional load transport motor vehicle	SL	A road tractor or tractor unit for semi-trailer of category N_3 meeting all the following conditions: (a) having more than two axles and at least half of the axles (two axles out of three in the case of a three axle vehicle and three axles out of five in the case of a five axle vehicle) designed to be driven simultaneously, irrespective of whether one powered axle can be disengaged; (b) that is designed for towing and pushing exceptional load transport trailer of category O_4; (c) that has a minimum engine power of 350 kW; and (d) that can be equipped with an additional front coupling device for heavy towable masses.
5.12.	Multi-equipment carrier	SM	An off-road vehicle of category N (as defined in point 2.3) designed and constructed for pulling, pushing, carrying and actuating certain inter-changeable equipment: (a) with not less than two mounting areas for this equipment; (b) with standardised, mechanical, hydraulic and/or electrical interfaces (e.g. Power take off) for powering and actuating the inter-changeable equipment; and (c) that fulfils the definition of international standard ISO 3833-1977, paragraph 3.1.4 (special vehicle). If the vehicle is equipped with an auxiliary load platform, its maximum length shall not exceed: (a) 1,4 times of the front or rear track width of the vehicle, whichever is the larger in the case of two axle vehicles; or (b) 2,0 times of the front or rear track width of the vehicle, whichever is the larger in the case of vehicles having more than two axles.

6. Remarks

6.1. Type-approval shall not be granted:

(a) to converter dolly as defined in point 5.9 of this Part;

(b) to rigid drawbar trailers as defined in point 5.4 of Part C;

(c) to trailers in which persons may be carried when travelling on the road.

▼B

6.2. Point 6.1 is without prejudice to Article 42 on national small series type-approval.

PART B

Criteria for types of vehicle, variants and versions

1. Category M_1

1.1. Type of vehicle

1.1.1. A 'type of vehicle' shall consist of vehicles that have the following features in common:

(a) the manufacturer's company name.

A change in the legal form of ownership of the company does not require that a new approval has to be granted;

(b) the design and assembly of the essential parts of the body structure in the case of a self-supporting body.

The same shall apply to vehicles the bodywork of which is bolted on or welded to a separate frame;

1.1.2. By way of derogation from the requirements of point 1.1.1(b), when the manufacturer uses the floor portion of the body structure as well as the essential constituent elements forming the front part of the body structure located directly in front of the windscreen bay, in the construction of different kinds of bodywork (for example a saloon and a coupe), those vehicles may be considered as belonging to the same type. Evidence thereof shall be provided by the manufacturer.

1.1.3. A type shall consist of at least one variant and one version.

1.2. Variant

1.2.1. A 'variant' within a type of vehicle shall group the vehicles that have the following construction features in common:

(a) the number of lateral doors or the type of bodywork as defined in point 2 of Part C when the manufacturer uses the criterion of point 1.1.2;

(b) the power plant with regard to the following construction features:

(i) the type of energy supply (internal combustion engine, electric motor or other);

(ii) the working principle (positive ignition, compression ignition or other);

(iii) the number and arrangement of cylinders in the case of internal combustion engine (L4, V6 or other);

(c) the number of axles;

(d) the number, and interconnection of powered axles;

(e) the number of steered axles;

(f) the stage of completion (e.g. complete/incomplete);

(g) in the case of multi-stage built vehicles, the manufacturer and the type of the previous stage vehicle.

1.3. Version

1.3.1. A 'version' within a variant shall group the vehicles that have the following features in common:

▼B

(a) the technically permissible maximum laden mass;

(b) the engine capacity in the case of internal combustion engine;

(c) the maximum engine power output or the maximum continuous rated power (electric motor);

(d) the nature of the fuel (petrol, gas oil, LPG, bi-fuel or other);

(e) the maximum number of seating positions;

(f) drive-by sound level;

(g) exhaust emission level (for example Euro 5, Euro 6 or other);

(h) combined or weighted, combined CO_2 emissions;

(i) electric energy consumption (weighted, combined);

(j) combined or weighted, combined fuel consumption;

As an alternative to the criteria in points (h), (i) and (j), the vehicles grouped into a version shall have in common all tests performed for the calculation of their CO_2 emissions, electric energy consumption and fuel consumption in accordance with sub-Annex 6 to Annex XXI to Commission Regulation (EU) 2017/1151 ([1]).

2. Categories M_2 and M_3

2.1. Type of vehicle

2.1.1. A ‘type of vehicle’ shall consist of vehicles that have the following features in common:

(a) the manufacturer's company name.

A change in the legal form of ownership of the company does not require that a new approval has to be granted;

(b) the category;

(c) the following aspects of construction and design:

(i) the design and construction of the essential constituent elements forming the chassis;

(ii) the design and construction of the essential constituent elements forming the body structure in the case of a self-supporting body;

(d) the number of decks (single or double);

(e) the number of sections (rigid/articulated);

(f) the number of axles;

(g) the mode of energy supply (on-board or off-board);

([1]) Commission Regulation (EU) 2017/1151 of 1 June 2017 supplementing Regulation (EC) No 715/2007 of the European Parliament and of the Council on type-approval of motor vehicles with respect to emissions from light passenger and commercial vehicles (Euro 5 and Euro 6) and on access to vehicle repair and maintenance information, amending Directive 2007/46/EC of the European Parliament and of the Council, Commission Regulation (EC) No 692/2008 and Commission Regulation (EU) No 1230/2012 and repealing Commission Regulation (EC) No 692/2008 (OJ L 175, 7.7.2017, p. 1).

▼B

2.1.2. A type of vehicle shall consist of at least one variant and one version.

2.2. Variant

2.2.1. A ‘variant’ within a type of vehicle shall group the vehicles that have all of the following construction features in common:

(a) the type of bodywork as defined in point 3 of Part C;

(b) the class or combination of classes of vehicles as defined in paragraph 2.1.1 of UN Regulation No 107 (only in the case of complete and completed vehicles);

(c) the stage of completion (e.g. complete/incomplete/completed);

(d) the power plant with regard to the following construction features:

(i) the type of energy supply (internal combustion engine, electric motor or other);

(ii) the working principle (positive ignition, compression ignition or other);

(iii) the number and arrangement of cylinders in the case of internal combustion engine (L6, V8 or other);

(e) in the case of multi-stage built vehicles, the manufacturer and the type of the previous stage vehicle.

2.3. Version

2.3.1. A ‘version’ within a variant shall group the vehicles that have all the following features in common:

(a) the technically permissible maximum laden mass;

(b) the ability of the vehicle to tow a trailer or not;

(c) the engine capacity in the case of internal combustion engine;

(d) the maximum engine power output or the maximum continuous rated power (electric motor);

(e) the nature of the fuel (petrol, gas oil, LPG, bi-fuel or other);

(f) drive-by sound level;

(g) exhaust emission level (for example Euro IV, Euro V or other).

3. Category N_1

3.1. Type of vehicle

3.1.1. A ‘type of vehicle’ shall consist of vehicles that have the following features in common:

(a) the manufacturer's company name.

A change in the legal form of ownership of the company does not require that a new approval has to be granted;

▼B

(b) the design and assembly of the essential parts of the body structure in the case of a self-supporting body;

(c) the design and the construction of the essential constituent elements forming the chassis in the case of a non-self-supporting body.

3.1.2. By way of derogation from the requirements of point 3.1.1(b), when the manufacturer uses the floor portion of the body structure as well the essential constituent elements forming the front part of the body structure located directly in front of the windscreen bay, in the construction of different kinds of bodywork (for example a van and a chassis-cab, different wheelbases and different roof heights), those vehicles may be considered as belonging to the same type. Evidence thereof shall be provided by the manufacturer.

3.1.3. A type of vehicle shall consist of at least one variant and one version.

3.2. Variant

3.2.1. A ‘variant’ within a type of vehicle shall group the vehicles that have the following construction features in common:

(a) the number of lateral doors or the type of bodywork as defined in point 4 of Part C (for complete and completed vehicles) when the manufacturer uses the criterion of point 3.1.2;

(b) the stage of completion (e.g. complete/incomplete/completed);

(c) the power plant with regard to the following construction features:

(i) the type of energy supply (internal combustion engine, electric motor or other);

(ii) the working principle (positive ignition, compression ignition or other);

(iii) the number and arrangement of cylinders in the case of internal combustion engine (L6, V8 or other);

(d) the number of axles;

(e) the number and interconnection of powered axles;

(f) the number of steered axles.

(g) in the case of multi-stage built vehicles, the manufacturer and the type of the previous stage vehicle.

3.3. Version

3.3.1. A ‘version’ within a variant shall group the vehicles that have the following features in common:

(a) the technically permissible maximum laden mass;

(b) the engine capacity in the case of internal combustion engine;

(c) the maximum engine power output or maximum continuous rated power (electric motor);

▼B

(d) the nature of the fuel (petrol, gas oil, LPG, bi-fuel or other);

(e) the maximum number of seating positions;

(f) drive-by sound level;

(g) exhaust emission level (for example Euro 5, Euro 6 or other);

(h) combined or weighted, combined CO_2 emissions;

(i) electric energy consumption (weighted, combined);

(j) combined or weighted, combined fuel consumption;

(k) the existence of a unique set of innovative technologies, as specified in Article 12 of Regulation (EU) No 510/2011 of the European Parliament and of the Council ([1]).

As an alternative to the criteria in points (h), (i) and (j), the vehicles grouped into a version shall have in common all tests performed for the calculation of their CO_2 emissions, electric energy consumption and fuel consumption in accordance with sub-Annex 6 to Annex XXI of Regulation (EU) 2017/1151.

4. Categories N_2 and N_3

4.1. Type of vehicle

4.1.1. A ‘type of vehicle’ shall consist of vehicles that have the following features in common:

(a) the manufacturer's company name.

A change in the legal form of ownership of the company does not require that a new approval has to be granted;

(b) the category;

(c) the design and construction of the chassis that are common to a single line of product;

(d) the number of axles;

4.1.2. A type of vehicle shall consist of at least one variant and one version.

4.2. Variant

4.2.1. A ‘variant’ within a type of vehicle shall group the vehicles that have the following construction features in common:

(a) the body structural concept or type of bodywork as defined in point 4 of Part C and in Appendix 2 (only for complete and completed vehicles);

(b) the stage of completion (e.g. complete/incomplete/completed);

([1]) Regulation (EU) No 510/2011 of the European Parliament and of the Council of 11 May 2011 setting emission performance standards for new light commercial vehicles as part of the Union's integrated approach to reduce CO_2 emissions from light-duty vehicles (OJ L 145, 31.5.2011, p. 1).

▼B

(c) the power plant with regard to the following construction features:

(i) the type of energy supply (internal combustion engine, electric motor or other);

(ii) the working principle (positive ignition, compression ignition or other);

(iii) the number and arrangement of cylinders in the case of internal combustion engine (L6, V8 or other);

(d) the number and interconnection of powered axles;

(e) the number of steered axles;

(f) in the case of multi-stage built vehicles, the manufacturer and the type of the previous stage vehicle.

4.3. Version

4.3.1. A ‘version’ within a variant shall group the vehicles that have the following features in common:

(a) the technically permissible maximum laden mass;

(b) the ability or not to tow a trailer as follows:

(i) an unbraked trailer;

(ii) a trailer with an inertia (or overrun) braking system as defined in paragraph 2.12 of UN Regulation No 13;

(iii) a trailer with a continuous or semi-continuous braking system as defined in paragraphs 2.9 and 2.10 of UN Regulation No 13;

(iv) a trailer of category O_4 that results in a maximum mass of the combination not exceeding 44 tonnes;

(v) a trailer of category O_4 that results in a maximum mass of the combination exceeding 44 tonnes;

(c) the engine capacity;

(d) the maximum engine power output;

(e) the nature of the fuel (petrol, gas oil, LPG, bi-fuel or other);

(f) drive-by sound level;

(g) exhaust emission level (for example Euro IV, Euro V or other).

5. Categories O_1 and O_2

5.1. Type of vehicle

5.1.1. A ‘type of vehicle’ shall consist of vehicles that have the following features in common:

(a) the manufacturer's company name.

A change in the legal form of ownership of the company does not require that a new approval has to be granted;

(b) the category;

(c) the concept as defined in point 5 of Part C;

▼B

(d) the following aspects of construction and design:

(i) the design and construction of the essential constituent elements forming the chassis;

(ii) the design and construction of the essential constituent elements forming the body structure in the case of a self-supporting body;

(e) the number of axles.

5.1.2. A type of vehicle shall consist of at least one variant and one version.

5.2. Variant

5.2.1. A 'variant' within a type of vehicle shall group the vehicles that have the following construction features in common:

(a) the kind of bodywork as referred to in Appendix 2 (for complete and completed vehicles);

(b) the stage of completion (e.g. complete/incomplete/completed);

(c) the type of braking system (e.g. unbraked/inertia/power);

(d) in the case of multi-stage built vehicles, the manufacturer and the type of the previous stage vehicle.

5.3. Version

5.3.1. A 'version' within a variant shall group the vehicles that have the following features in common:

(a) the technically permissible maximum laden mass;

(b) the concept of the suspension (air, steel or rubber suspension, torsion bar or other);

(c) the concept of the drawbar (triangle, tube or other).

6. Categories O_3 and O_4

6.1. Type of vehicle

6.1.1. A 'type of vehicle' shall consist of vehicles that have the following features in common:

(a) the manufacturer's company name.

A change in the legal form of ownership of the company does not require that a new approval has to be granted;

(b) the category;

(c) the concept of the trailer with relation to the definitions in point 5 of Part C;

(d) the following aspects of construction and design:

(i) the design and construction of the essential constituent elements forming the chassis;

(ii) the design and construction of the essential constituent elements forming the body structure in the case of trailers with a self-supporting body;

▼M6

(iii) the design and construction of the essential constituent elements forming the propulsion and energy storage system in the case of e-trailers;

▼B

(e) the number of axles.

6.1.2. A type of vehicle shall consist of at least one variant and one version.

▼B

6.2. Variants

6.2.1. A ‘variant’ within a type of vehicle shall group the vehicles that have the following construction and design features in common:

(a) the kind of bodywork as referred to in Appendix 2 (for complete and completed vehicles);

(b) the stage of completion (e.g. complete/incomplete/completed);

(c) the concept of the suspensions (steel, air or hydraulic suspension);

(d) the following technical features:

(i) the capability or not for the chassis to be extendible;

(ii) the deck height (normal, low loader, semi-low loader etc.);

(e) in the case of multi-stage built vehicles, the manufacturer and the type of the previous stage vehicle.

6.3. Versions

6.3.1. A ‘version’ within a variant shall group the vehicles that have the following features in common:

(a) the technically permissible maximum laden mass;

(b) the subdivisions or combination of subdivisions referred to in points 3.2 and 3.3 of Annex I to Directive 96/53/EC into which the axle spacing between two consecutive axles forming a group belongs;

(c) the definition of the axles in the following respects:

(i) lift axles (number and position);

(ii) loadable axles (number and position);

(iii) steered axle (number and position).

7. Common requirements for all vehicle categories

7.1. When a vehicle falls into several categories because of its maximum mass or the number of seating positions or both, the manufacturer may select to use the criteria of one or the other vehicle category for the definition of the variants and the versions.

7.1.1. Examples:

(a) a vehicle ‘A’ may be type-approved as N_1 (3,5 tonnes) and N_2 (4,2 tonnes) in relation to its maximum mass. In such a case, the parameters mentioned in category N_1 may be used also for the vehicle that falls into category N_2 (or vice-versa);

(b) a vehicle ‘B’ may be type-approved as M_1 and M_2 in relation to the number of seating positions (7 + 1 or 10 + 1), the parameters mentioned in category M_1 may be used also for the vehicle that falls into category M_2 (or vice-versa).

▼B

7.2. A vehicle of category N may be type-approved against the provisions required for category M_1 or M_2, as the case may be, when it is intended to be converted into a vehicle of that category during the next step of a multi-stage type-approval procedure.

7.2.1. This option shall only be permitted for incomplete vehicles.

Such vehicles shall be identified by a specific variant code given by the manufacturer of the base vehicle.

7.3. Type-, variant- and version designations

7.3.1. The manufacturer shall allocate an alphanumeric code to each type of vehicle, variant and version, made up of Roman letters and/or Arabic numerals.

The use of brackets and hyphens is permitted provided they do not replace a letter or a numeral.

7.3.2. The whole code shall be designated: Type-Variant-Version or 'TVV'.

7.3.3. The TVV shall clearly and unequivocally identify a unique combination of technical features in relation to the criteria defined in this Part.

7.3.4. The same manufacturer may use the same code in order to define a type of vehicle when the latter falls in two or more categories.

7.3.5. The same manufacturer shall not use the same code in order to define a type of vehicle for more than one type-approval within the same vehicle category.

7.4. Number of characters for the TVV

7.4.1. The number of characters shall not exceed:

(a) 15 for the code of the type of vehicle;

(b) 25 for the code of one variant;

(c) 35 for the code of one version.

7.4.2. The complete alphanumeric 'TVV' shall not contain more than 75 characters.

7.4.3. When the TVV is used as a whole, a space shall be left between the type, the variant and the version.

Example of such TVV: 159AF[…space]0054[…space]977K(BE).

PART C

Definitions of types of bodywork

1. General

1.1. The type of bodywork as well as the code for bodywork shall be indicated by means of codes.

The list of codes shall apply primarily to complete and completed vehicles.

1.2. As regards vehicles of categories M, the type of bodywork shall consist of two letters as specified in points 2 and 3.

▼B

1.3. As regards vehicles of categories N and O, the type of bodywork shall consist of two letters as referred to in points 4 and 5.

1.4. Where necessary (especially for the types of bodywork referred to respectively in points 4.1 and 4.6 and in points 5.1 to 5.4), they shall be supplemented by two digits.

1.4.1. The list of digits shall be laid down in Appendix 2.

1.5. For special purpose vehicles, the type of bodywork to be used shall be linked to the category of the vehicle.

2. Vehicles belonging to category M_1

Ref.	Code	Name	Definition
2.1.	AA	Saloon	A vehicle defined in term 3.1.1.1 of international standard ISO 3833:1977, fitted with at least four side windows.
2.2.	AB	Hatchback	A saloon as defined in 2.1 with a hatch at the rear end of the vehicle.
2.3.	AC	Station wagon	A vehicle defined in term 3.1.1.4 of international standard ISO 3833:1977.
2.4.	AD	Coupé	A vehicle defined in term 3.1.1.5 of international standard ISO 3833:1977.
2.5.	AE	Convertible	A vehicle defined in terms No 3.1.1.6 of international standard ISO 3833:1977. However, a convertible may have no door.
2.6.	AF	Multi-purpose vehicle	A vehicle other than AG and those mentioned in AA to AE intended for carrying persons and their luggage or occasionally goods, in a single compartment.
2.7.	AG	Truck station wagon	A vehicle defined in term No 3.1.1.4.1 of international standard ISO 3833:1977. However, the luggage compartment must be completely separated from the passenger compartment. In addition, the reference point of the driver's seating position needs not to be at least at 750 mm above the surface supporting the vehicle.

3. Vehicles belonging to category M_2 or M_3

Ref.	Code	Name	Definition
3.1.	CA	Single-deck vehicle	A vehicle where the spaces provided for persons are arranged in a single level or in a way that they do not constitute two superimposed levels;
3.2.	CB	Double-deck vehicle	A vehicle defined in paragraph 2.1.6 of UN Regulation No 107;
3.3.	CC	Single-deck articulated vehicle	A vehicle defined in paragraph 2.1.3 of UN Regulation No 107 with a single deck;
3.4.	CD	Double-deck articulated vehicle	A vehicle defined in paragraph 2.1.3.1 of UN Regulation No 107;
3.5.	CE	Low-floor single-deck vehicle	A vehicle defined in paragraph 2.1.4 of UN Regulation No 107 with a single deck;

▼B

Ref.	Code	Name	Definition
3.6.	CF	Low-floor double-deck vehicle	A vehicle defined in paragraph 2.1.4 of UN Regulation No 107 with a double deck;
3.7.	CG	Articulated low-floor single-deck vehicle	A vehicle that combines the technical features of points 3.3 and 3.5 of this table;
3.8.	CH	Articulated low-floor double-deck vehicle	A vehicle that combines the technical features of points 3.4 and 3.6 of this table;
3.9.	CI	Open top single deck vehicle	A vehicle with partial roof or without roof;
3.10.	CJ	Open top double deck vehicle	A vehicle without roof over all or part of its upper deck;
3.11.	CX	Bus chassis	An incomplete vehicle with just chassis rails or tube assembly, power train, axles, that is intended to be completed with bodywork, customised to the needs of the transport operator.

4. Motor vehicles of category N_1, N_2 or N_3

Ref.	Code	Name	Definition
4.1.	BA	Lorry	A vehicle that is designed and constructed exclusively or principally for conveying goods. It may also tow a trailer.
4.2.	BB	Van	A lorry with the compartment where the driver is located and cargo area within a single unit.
4.3.	BC	Tractor unit for semi-trailer	A towing vehicle that is designed and constructed exclusively or principally to tow semi-trailers.
4.4.	BD	Road tractor	A towing vehicle that is designed and constructed exclusively to tow trailers other than semi-trailers.
4.5.	BE	Pick-up truck	A vehicle of a maximum mass not exceeding 3 500 kg in which the seating positions and the cargo area are not located in a single compartment.
4.6.	BX	Chassis-cab or chassis-cowl	An incomplete vehicle with just a cabin (complete or partial), chassis rails, power train, axles, which is intended to be completed with bodywork, customised to the needs of the transport operator.

5. Vehicles of category O

Ref.	Code	Name	Definition
5.1.	DA	Semi-trailer	A trailer that is designed and constructed to be coupled to a tractor unit or to a converter dolly and to impose a substantial vertical load on the towing vehicle or on the converter dolly. The coupling to be used for a vehicle combination shall consist of a king pin and a fifth wheel.

▼B

Ref.	Code	Name	Definition
5.2.	DB	Drawbar trailer	A trailer having at least two axles, of which at least one is a steered axle: (a) equipped with a towing device which can move vertically (in relation to the trailer); and (b) that transmits less than 100 daN as a static vertical load to the towing vehicle.
5.3.	DC	Centre-axle trailer	A trailer where the axle(s) is (are) positioned close to the centre of gravity of the vehicle (when uniformly loaded) so that only a small static vertical load, not exceeding 10 % of that corresponding to the maximum mass of the trailer or a load of 1 000 daN (whichever is the lesser) is transmitted to the towing vehicle.
5.4.	DE	Rigid drawbar trailer	A trailer with one axle or one group of axles fitted with a drawbar which transmits a static load not exceeding 4 000 daN to the towing vehicle due to its construction and that does not meet the definition of a centre-axle trailer. The coupling to be used for a vehicle combination shall not consist of a king pin and a fifth wheel.
▼M4 5.5.	DF	Link semi-trailer	A semi-trailer with a fifth wheel mounted at the rear such that the link semi-trailer could tow another semi-trailer.
5.6.	DG	Link drawbar trailer	A drawbar trailer with a fifth wheel mounted at the rear such that the link trailer could tow another semi-trailer.

▼B

Appendix 1

Procedure for checking whether a vehicle can be categorised as off-road vehicle

1. General

1.1. For the purposes of classification of a vehicle as off-road vehicle, the procedure described in this Appendix shall apply.

2. Test conditions for geometric measurements

2.1. Vehicles belonging to category M_1 or N_1 shall be in unloaded conditions with a manikin of the 50th percentile male installed on the driver's seat and fitted with coolant fluid, lubricants, fuel, tools, spare-wheel (if fitted as OEM equipment).

The manikin may be replaced by a similar device having the same mass.

2.2. Vehicles other than those referred to in point 2.1 shall be loaded to their technically permissible maximum laden mass.

The distribution of the mass on the axles shall be the one that represents the worst case with respect to compliance with the respective criteria.

2.3. A vehicle representative of the type shall be submitted to the technical service in the conditions specified in point 2.1 or 2.2. The vehicle shall be in a stationary position with its wheels set straight ahead.

The ground on which measurements are made shall be as flat and horizontal (maximum of inclination 0,5 %) as possible.

3. Measurement of approach, departure and ramp angles

3.1. The approach angle shall be measured in accordance with paragraph 6.10 of international standard ISO 612:1978.

3.2. The departure angle shall be measured in accordance with paragraph 6.11 of international standard ISO 612:1978.

3.3. The ramp angle shall be measured in accordance with paragraph 6.9 of international standard ISO 612:1978.

3.4. When measuring the departure angle rear underrun protection devices which are adjustable in height may be set in the upper position.

3.5. The prescription in point 3.4 shall not be construed as an obligation for the base vehicle to be fitted with a rear underrun protection as original equipment. However, the base vehicle manufacturer shall inform the next stage manufacturer that the vehicle has to comply with the requirements on departure angle when fitted with a rear underrun protection.

4. Measurement of ground clearance

4.1. Ground clearance between the axles

4.1.1. ‘Ground clearance between the axles’ means the shortest distance between the ground plane and the lowest fixed point of the vehicle.

▼B

For the application of the definition, the distance between the last axle of a front group of axle and the first axle of a rear group of axle shall be considered.

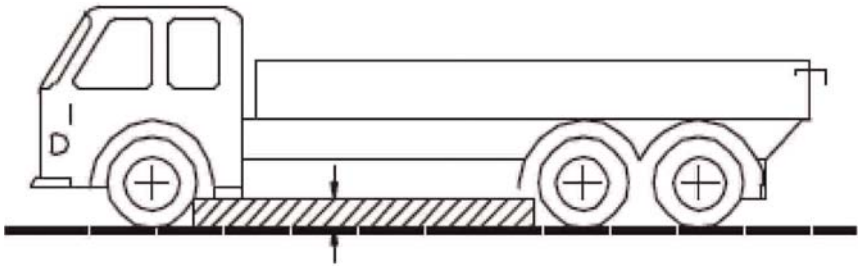

4.1.2. No rigid part of the vehicle may project into the shaded area shown on the figure.

4.2. Ground clearance beneath one axle

4.2.1. 'Ground clearance beneath one axle' means the distance beneath the highest point of the arc of a circle passing through the centre of the tyre footprint of the wheels on one axle (the inner wheels in the case of twin tyres) and touching the lowest fixed point of the vehicle between the wheels.

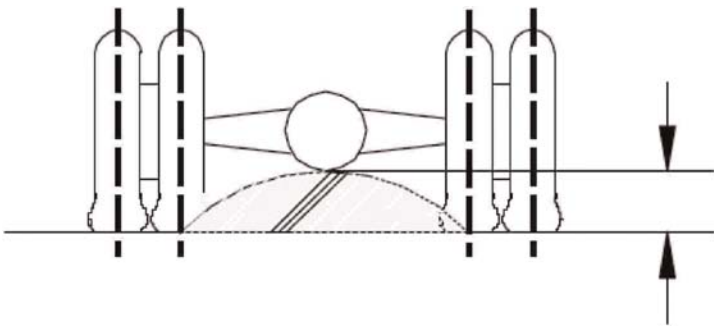

4.2.2. Where appropriate, the measurement of ground clearance shall be conducted on each of the several axles of a group of axles.

5. Gradeability

5.1. 'Gradeability' means the ability of a vehicle to negotiate a gradient.

5.2. To the effect of checking the gradeability of an incomplete and a complete vehicle of category M_2, M_3, N_2 and N_3, a test shall be performed.

5.3. The test shall be conducted by the technical service on a vehicle representative of the type to be tested.

5.4. At the request of the manufacturer and under the conditions specified in Annex VIII, the gradeability of a type of vehicle may be demonstrated by virtual testing.

6. Test conditions and pass-fail criterion

▼B

6.1. The conditions set out in Annex II to Commission Regulation (EU) No 1230/2012 [1] shall apply.

6.2. The vehicle shall climb the gradient at a steady speed without any wheel slipping, longitudinally or laterally.

[1] Commission Regulation (EU) No 1230/2012 of 12 December 2012 implementing Regulation (EC) No 661/2009 of the European Parliament and of the Council with regard to type-approval requirements for masses and dimensions of motor vehicles and their trailers and amending Directive 2007/46/EC of the European Parliament and of the Council (OJ L 353, 21.12.2012, p. 31).

▼B

Appendix 2

Digits used to supplement the codes to be used for various kinds of bodywork

01 Flat bed;

02 Drop-side;

03 Box body;

04 Conditioned body with insulated walls and equipment to maintain the interior temperature;

05 Conditioned body with insulated walls but without equipment to maintain the interior temperature;

06 Curtain-sided;

07 Swap body (interchangeable superstructure);

08 Container carrier;

09 Vehicles fitted with hook lift;

10 Tipper;

11 Tank;

12 Tank intended for transport of dangerous goods;

13 Livestock carrier;

14 Vehicle transporter;

15 Concrete mixer;

16 Concrete pump vehicle;

17 Timber;

18 Refuse collection vehicle;

19 Street sweeper, cleansing and drain clearing;

20 Compressor;

21 Boat carrier;

22 Glider carrier;

23 Vehicles for retail or display purposes;

24 Recovery vehicle;

25 Ladder vehicle;

26 Crane lorry (other than a mobile crane as defined in point 5.7 of Part A);

27 Aerial work platform vehicle;

28 Digger derrick vehicle;

29 Low floor trailer;

30 Glazing transporter;

31 Fire engine;

▼M4

32 Drop-side tarpaulin;

▼B

99 Bodywork that is not included in this list.

▼B

ANNEX II

REQUIREMENTS FOR THE PURPOSE OF EU TYPE-APPROVAL OF VEHICLES, SYSTEMS, COMPONENTS OR SEPARATE TECHNICAL UNITS

▼M4

PART I

Regulatory acts for EU type-approval of vehicles produced in unlimited series

EXPLANATORY NOTES

to the table for vehicles produced in unlimited series

X: Applies to the vehicle category, separate technical unit or component in accordance with the regulatory act as indicated

IF: Applies only if the system, separate technical unit or component is fitted to the vehicle in the respective vehicle category

Item	Subject	Regulatory act	M_1	M_2	M_3	N_1	N_2	N_3	O_1	O_2	O_3	O_4	STU	Compone-nt
A	RESTRAINT SYSTEMS, CRASH TESTING, FUEL SYSTEM INTEGRITY AND HIGH VOLTAGE ELECTRICAL SAFETY													
A1	Interior fittings	Regulation (EU) 2019/2144	X											
A2	Seats and head restraints	Regulation (EU) 2019/2144	X	X	X	X	X	X						
A3	Bus seats	Regulation (EU) 2019/2144		X	X									X
A4	Safety-belt anchorages	Regulation (EU) 2019/2144	X	X	X	X	X	X						
A5	Safety-belts and restraint systems	Regulation (EU) 2019/2144	X	X	X	X	X	X					X	X

02018R0858 — EN — 02.08.2026 — 007.001 — 115

▼M4

Item	Subject	Regulatory act	M_1	M_2	M_3	N_1	N_2	N_3	O_1	O_2	O_3	O_4	STU	Compone-nt
A6	Safety-belt reminders	Regulation (EU) 2019/2144	X	X	X	X	X	X						
A7	Partitioning systems	Regulation (EU) 2019/2144											X	
A8	Child restraint anchorages	Regulation (EU) 2019/2144	X	IF X	IF X	IF X	IF X	IF X						
A9	Child restraint systems (IF)	Regulation (EU) 2019/2144	X	X	X	X	X	X					X	X
A10	Enhanced child restraint systems (IF)	Regulation (EU) 2019/2144	X	X	X	X	X	X					X	X
A11	Front underrun protection	Regulation (EU) 2019/2144					X	X					X	X
A12	Rear underrun protection	Regulation (EU) 2019/2144	X	X	X	X	X	X	X	X	X	X	X	X
A13	Lateral protection	Regulation (EU) 2019/2144					X	X			X	X		
A14	Fuel tank safety (IF)	Regulation (EU) 2019/2144	X	X	X	X	X	X	X	X	X	X	X	
A15	Liquified petroleum gas safety (IF)	Regulation (EU) 2019/2144	X	X	X	X	X	X						X
A16	Compressed and liquified natural gas safety (IF)	Regulation (EU) 2019/2144	X	X	X	X	X	X						X

▼M4

Item	Subject	Regulatory act	M_1	M_2	M_3	N_1	N_2	N_3	O_1	O_2	O_3	O_4	STU	Compone-nt
A17	Hydrogen safety (IF)	Regulation (EU) 2019/2144	X	X	X	X	X	X						X
A18	Hydrogen system material qualification (IF)	Regulation (EU) 2019/2144	X	X	X	X	X	X						X
A19	In-use electric safety (IF)	Regulation (EU) 2019/2144	X	X	X	X	X	X						X
A20	Frontal off-set impact	Regulation (EU) 2019/2144	X			X								
A21	Frontal full-width impact	Regulation (EU) 2019/2144	X			X								
A22	Protective steering	Regulation (EU) 2019/2144	X			X							X	
A23	Replacement airbag	Regulation (EU) 2019/2144											X	
A24	Cab impact	Regulation (EU) 2019/2144				X	X	X						
A25	Side impact	Regulation (EU) 2019/2144	X			X								
A26	Pole side impact	Regulation (EU) 2019/2144	X			X								
A27	Rear impact	Regulation (EU) 2019/2144	X			X								
A28	112-based eCall in-vehicles systems	Regulation (EU) 2015/758	X			X							X	X

▼M4

Item	Subject	Regulatory act	M_1	M_2	M_3	N_1	N_2	N_3	O_1	O_2	O_3	O_4	STU	Compone-nt
B	VULNERABLE ROAD USERS, VISION AND VISIBILITY													
B1	Pedestrian leg and head protection	Regulation (EU) 2019/2144	X			X								
B2	Enlarged head impact zone	Regulation (EU) 2019/2144	X			X								
B3	Frontal protection system	Regulation (EU) 2019/2144	X			X							X	
B4	Advanced emergency braking for pedestrians and cyclists ahead	Regulation (EU) 2019/2144	X			X								
B5	Pedestrian and cyclist collision warning	Regulation (EU) 2019/2144		X	X		X	X					X	
B6	Blind spot information system	Regulation (EU) 2019/2144		X	X		X	X					X	
B7	Reversing detection	Regulation (EU) 2019/2144	X	X	X	X	X	X					X	
B8	Forward vision	Regulation (EU) 2019/2144	X			X								
B9	Heavy-duty vehicles direct vision	Regulation (EU) 2019/2144		X	X		X	X						
B10	Safety glazing	Regulation (EU) 2019/2144	X	X	X	X	X	X	X	X	X	X		X

▼M4

Item	Subject	Regulatory act	M_1	M_2	M_3	N_1	N_2	N_3	O_1	O_2	O_3	O_4	STU	Compone-nt
B11	Defrost/demist	Regulation (EU) 2019/2144	X	X	X	X	X	X						
B12	Wash/wipe	Regulation (EU) 2019/2144	X	X	X	X	X	X					X	
B13	Indirect vision devices	Regulation (EU) 2019/2144	X	X	X	X	X	X						X
B14	Acoustic Vehicle Alerting Systems	Regulation (EU) No 540/2014	X	X	X	X	X	X						
C	VEHICLE CHASSIS, BRAKING, TYRES AND STEERING													
C1	Steering equipment	Regulation (EU) 2019/2144	X	X	X	X	X	X	X	X	X	X		
C2	Lane departure warning	Regulation (EU) 2019/2144		X	X		X	X						
C3	Emergency lane keeping	Regulation (EU) 2019/2144	X			X								
C4	Braking	Regulation (EU) 2019/2144	X	X	X	X	X	X	X	X	X	X		
C5	Replacement braking parts	Regulation (EU) 2019/2144											X	
C6	Brake assist	Regulation (EU) 2019/2144	X			X								
C7	Stability control	Regulation (EU) 2019/2144	X	X	X	X	X	X	X	X	X	X		
C8	Advanced emergency braking on heavy-duty vehicles	Regulation (EU) 2019/2144		X	X		X	X						

▼M4

Item	Subject	Regulatory act	M_1	M_2	M_3	N_1	N_2	N_3	O_1	O_2	O_3	O_4	STU	Compone-nt
C9	Advanced emergency braking on light-duty vehicles	Regulation (EU) 2019/2144	X			X								
C10	Tyre safety and environmental performance	Regulation (EU) 2019/2144												X
C11	Spare wheels and run-flat systems (IF)	Regulation (EU) 2019/2144	X			X								
C12	Retreaded tyres	Regulation (EU) 2019/2144												X
C13	Tyre pressure monitoring for light–duty vehicles	Regulation (EU) 2019/2144	X			X								
C14	Tyre pressure monitoring for heavy-duty vehicles	Regulation (EU) 2019/2144		X	X		X	X			X	X		
C15	Tyre installation	Regulation (EU) 2019/2144	X	X	X	X	X	X	X	X	X	X		
C16	Replacement wheels	Regulation (EU) 2019/2144												X
D	ON-BOARD INSTRUMENTS, ELECTRICAL SYSTEM, VEHICLE LIGHTING AND PROTECTION AGAINST UNAUTHORISED USE, INCLUDING CYBERATTACKS													
D1	Audible warning	Regulation (EU) 2019/2144	X	X	X	X	X	X						X
D2	Radio interference (electromagnetic compatibility)	Regulation (EU) 2019/2144	X	X	X	X	X	X	X	X	X	X	X	X

▼M4

Item	Subject	Regulatory act	M_1	M_2	M_3	N_1	N_2	N_3	O_1	O_2	O_3	O_4	STU	Component
D3	Protection against unauthorised use, immobiliser and alarm systems	Regulation (EU) 2019/2144	X	IF X	IF X	X	IF X	IF X					X	X
D4	Protection of vehicle against cyberattacks	Regulation (EU) 2019/2144	X	X	X	X	X	X					X	X
D5	Speedometer	Regulation (EU) 2019/2144	X	X	X	X	X	X						
D6	Odometer	Regulation (EU) 2019/2144	X	X	X	X	X	X						
D7	Speed limitation devices	Regulation (EU) 2019/2144		X	X		X	X						X
D8	Intelligent speed assistance	Regulation (EU) 2019/2144	X	X	X	X	X	X					X	
D9	Identification of controls, tell-tales and indicators	Regulation (EU) 2019/2144	X	X	X	X	X	X						
D10	Heating systems	Regulation (EU) 2019/2144	X	X	X	X	X	X	X	X	X	X		X
D11	Light signalling devices	Regulation (EU) 2019/2144												X
D12	Road illumination devices	Regulation (EU) 2019/2144												X
D13	Retro-reflective devices	Regulation (EU) 2019/2144												X
D14	Light sources	Regulation (EU) 2019/2144												X

▼M4

Item	Subject	Regulatory act	M_1	M_2	M_3	N_1	N_2	N_3	O_1	O_2	O_3	O_4	STU	Compone-nt
D15	Installation of light signalling, road illumination and retro-reflective devices	Regulation (EU) 2019/2144	X	X	X	X	X	X	X	X	X	X		
D16	Emergency stop signal	Regulation (EU) 2019/2144	X	X	X	X	X	X						
D17	Headlamp cleaners (IF)	Regulation (EU) 2019/2144	X	X	X	X	X	X						X
D18	Gear shift indicator	Regulation (EU) 2019/2144	X											
E	DRIVER AND SYSTEM BEHAVIOUR													
E1	Alcohol interlock installation facilitation	Regulation (EU) 2019/2144	X	X	X	X	X	X						
E2	Driver drowsiness and attention warning	Regulation (EU) 2019/2144	X	X	X	X	X	X						
E3	Advanced driver distraction warning	Regulation (EU) 2019/2144	X	X	X	X	X	X						
E4	Driver availability monitoring system (in case of automated vehicles)	Regulation (EU) 2019/2144	X	X	X	X	X	X						
E5	Event data recorder	Regulation (EU) 2019/2144	X	X	X	X	X	X					X	

▼M4

Item	Subject	Regulatory act	M_1	M_2	M_3	N_1	N_2	N_3	O_1	O_2	O_3	O_4	STU	Compone-nt
E6	Systems to replace driver's control (in case of automated vehicles)	Regulation (EU) 2019/2144	X	X	X	X	X	X						
E7	Systems to provide the vehicle with information on state of vehicle and surrounding area (in case of automated vehicles)	Regulation (EU) 2019/2144	X	X	X	X	X	X						
E8	Platooning (IF)	Regulation (EU) 2019/2144		X	X		X	X						
E9	Systems to provide safety information to other road users (in case of automated vehicles)	Regulation (EU) 2019/2144	X	X	X	X	X	X						
▼M8 E10	Systems to assist the driver in performing vehicle dynamic control	Regulation (EU) 2019/2144	IF X	IF X	IF X	IF X	IF X	IF X						
E11	Automated Valet Parking	Regulation (EU) 2019/2144	IF X	IF X	IF X	IF X	IF X	IF X						
▼M4 F	GENERAL VEHICLE CONSTRUCTION AND FEATURES													
F1	Registration plate space	Regulation (EU) 2019/2144	X	X	X	X	X	X	X	X	X	X		
F2	Reversing motion	Regulation (EU) 2019/2144	X	X	X	X	X	X						
F3	Door latches and hinges	Regulation (EU) 2019/2144	X			X								
F4	Door entry steps, handholds and running boards	Regulation (EU) 2019/2144	X			X	X	X						

▼M4

Item	Subject	Regulatory act	M_1	M_2	M_3	N_1	N_2	N_3	O_1	O_2	O_3	O_4	STU	Compone-nt
F5	External projections	Regulation (EU) 2019/2144	X											
F6	External projections of commercial vehicle cabs	Regulation (EU) 2019/2144				X	X	X						
F7	Statutory plate and vehicle identification number	Regulation (EU) 2019/2144	X	X	X	X	X	X	X	X	X	X		
F8	Towing devices	Regulation (EU) 2019/2144	X	X	X	X	X	X						
F9	Wheel guards	Regulation (EU) 2019/2144	X											
F10	Spray suppression systems	Regulation (EU) 2019/2144				X	X	X	X	X	X	X	X	
F11	Masses and dimensions	Regulation (EU) 2019/2144	X	X	X	X	X	X	X	X	X	X		
F12	Mechanical couplings	Regulation (EU) 2019/2144	IF X	IF X	IF X	IF X	IF X	IF X	X	X	X	X	X	X
F13	Vehicles intended for the transportation of dangerous goods (IF)	Regulation (EU) 2019/2144				X	X	X	X	X	X	X		
F14	General bus construction	Regulation (EU) 2019/2144		X	X									
F15	Bus strength of superstructure	Regulation (EU) 2019/2144		X	X									
F16	Flammability in buses	Regulation (EU) 2019/2144			X									X

▼M4

Item	Subject	Regulatory act	M_1	M_2	M_3	N_1	N_2	N_3	O_1	O_2	O_3	O_4	STU	Compone-nt
▼M8														
G	ENVIRONMENTAL PERFORMANCE AND EMISSIONS for 'Euro 6' vehicles, for 'Euro VI' vehicles and separate technical units and components (*1)													
▼M4														
G1	Sound level	Regulation (EU) No 540/2014	X	X	X	X	X	X					X	
G2	Tailpipe emissions of vehicle in lab	Regulation (EC) No 715/2007	X	X		X	X							X
G2a	Determination of specific CO_2 emissions and fuel consumption of vehicle and device for monitoring on board the vehicle the consumption of fuel and/or electric energy	Regulation (EC) No 715/2007	X	X		X	X							X
G3	Tailpipe emissions of engine in lab	Regulation (EC) No 595/2009	X	X	X	X	X	X					X	
G3a	Determination of specific CO_2 emissions and fuel consumption of vehicle	Regulation (EC) No 595/2009			X		X	X						
G3b	Determination of specific energy efficiency performance of trailer	Regulation (EC) No 595/2009									X	X		

▼M4

Item	Subject	Regulatory act	M_1	M_2	M_3	N_1	N_2	N_3	O_1	O_2	O_3	O_4	STU	Compone-nt
G4	Tailpipe emissions on the road	Regulation (EC) No 715/2007 Regulation (EC) No 595/2009	X	X	X	X	X	X					X	
G5	Durability of tailpipe emissions	Regulation (EC) No 715/2007 Regulation (EC) No 595/2009	X	X	X	X	X	X					X	
G6	Crankcase emissions	Regulation (EC) No 715/2007 Regulation (EC) No 595/2009	X	X	X	X	X	X					X	
G7	Evaporative emissions	Regulation (EC) No 715/2007	X	X		X	X							
G8	Low-temperature tailpipe emissions in lab	Regulation (EC) No 715/2007	X	X		X	X							
G9	On-board diagnostics	Regulation (EC) No 715/2007 Regulation (EC) No 595/2009	X	X	X	X	X	X					X	
G10	Absence of defeat device	Regulation (EC) No 715/2007 Regulation (EC) No 595/2009	X	X	X	X	X	X					X	

▼M4

Item	Subject	Regulatory act	M_1	M_2	M_3	N_1	N_2	N_3	O_1	O_2	O_3	O_4	STU	Compone-nt
G11	Auxiliary emissions strategies	Regulation (EC) No 715/2007 Regulation (EC) No 595/2009	X	X	X	X	X	X					X	
G12	Anti-tampering	Regulation (EC) No 715/2007 Regulation (EC) No 595/2009	X	X	X	X	X	X						
G13	Recyclability	Directive 2005/64/EC	X			X								
G14	Air-conditioning systems	Directive 2006/40/EC	X			X								X
▼M8 G16	Measurement of engine power	Regulation (EC) No 715/2007 Regulation (EC) No 595/2009	X	X	X	X	X	X					X	
G17	Operation of systems using consumable reagent and pollution control systems	Regulation (EC) No 715/2007 Regulation (EC) No 595/2009	X	X	X	X	X	X						
GA	ENVIRONMENTAL PERFORMANCE AND EMISSIONS for ‘Euro 7’ and ‘Euro 7ext’ vehicles, separate technical units and components (*2)													
GA1	Sound level	Regulation (EU) No 540/2014	X	X	X	X	X	X					X	
GA2	Tailpipe emissions of vehicle in lab	Regulation (EU) 2024/1257 Commission Implementing Regulation (EU) 2025/1706 (*3)	X			X								X

▼M8

Item	Subject	Regulatory act	M_1	M_2	M_3	N_1	N_2	N_3	O_1	O_2	O_3	O_4	STU	Compone-nt
GA2a	Determination of specific CO_2 emissions and fuel consumption of vehicle and device for monitoring on board the vehicle the consumption of fuel and/or electric energy	Regulation (EU) 2024/1257 Commission Implementing Regulation (EU) 2025/1706	X			X								X
GA4	Tailpipe emissions on the road	Regulation (EU) 2024/1257 Commission Implementing Regulation (EU) 2025/1706	X			X							X	
GA5	Durability of tailpipe emissions	Regulation (EU) 2024/1257 Commission Implementing Regulation (EU) 2025/1706	X			X							X	
GA6	Crankcase emissions	Regulation (EU) 2024/1257 Commission Implementing Regulation (EU) 2025/1706	X			X							X	
GA7	Evaporative emissions	Regulation (EU) 2024/1257 Commission Implementing Regulation (EU) 2025/1706	X			X								
GA8	Low-temperature tailpipe emissions in lab	Regulation (EU) 2024/1257 Commission Implementing Regulation (EU) 2025/1706	X			X								

▼M8

Item	Subject	Regulatory act	M_1	M_2	M_3	N_1	N_2	N_3	O_1	O_2	O_3	O_4	STU	Compone-nt
GA9	On-board diagnostics	Regulation (EU) 2024/1257 Commission Implementing Regulation (EU) 2025/1706	X			X							X	
GA10	Absence of manipulation devices and strategies	Regulation (EU) 2024/1257 Commission Implementing Regulation (EU) 2025/1706 Commission Implementing Regulation (EU) 2025/1707 (*4)	X			X							X	
GA11	Auxiliary emissions strategies	Regulation (EU) 2024/1257 Commission Implementing Regulation (EU) 2025/1706	X			X							X	
GA12	Anti-tampering, security and cybersecurity	Regulation (EU) 2024/1257 Commission Implementing Regulation (EU) 2025/1706	X			X							X	
GA13	Recyclability	Directive 2005/64/EC	X			X								
GA14	Air-conditioning systems	Directive 2006/40/EC	X			X								X
GA16	Measurement of engine power	Regulation (EU) 2024/1257 Commission Implementing Regulation (EU) 2025/1706	X			X								
GA17	Operation of systems using consumable reagent and pollution control systems	Regulation (EU) 2024/1257 Commission Implementing Regulation (EU) 2025/1706	X			X								
GA18	On-board monitoring (OBM), in-vehicle display of environmental data and environmental vehicle passport	Regulation (EU) 2024/1257 Commission Implementing Regulation (EU) 2025/1707	X			X								

▼M4

Item	Subject	Regulatory act	M_1	M_2	M_3	N_1	N_2	N_3	O_1	O_2	O_3	O_4	STU	Component
H	ACCESS TO VEHICLE INFORMATION AND SOFTWARE UPDATE													
H1	Access to vehicle OBD information and vehicle repair and maintenance information	Regulation (EU) 2018/858, Articles 61 to 66 and Annex X.	X	X	X	X	X	X	X	X	X	X		
H2	Software update	Regulation (EU) 2018/858, Annex IV UN Regulation No 156	X	X	X	X	X	X	X	X	X	X		

(*1) For light-duty vehicles in accordance with Regulation (EC) No 715/2007 (Euro 6 vehicles) or heavy-duty vehicles in accordance with Regulation (EC) No 595/2009 (Euro VI vehicles), compliance with items G2 to G12, G16 and G17 is mandatory, however, only a single vehicle emissions type-approval either under Regulation (EC) No 715/2007 or under Regulation (EC) No 595/2009 is foreseen depending on the scope.

(*2) For vehicles in accordance with Regulation (EU) 2024/1257 (Euro 7 or Euro 7ext vehicles), a collection of type-approvals and/or declarations of compliance is necessary as set out in the implementing legislation refered to in items GA2 to GA18 (excluding items GA13 and GA14). Requirements for Euro 7ext vehicles are those indicated in the column for N1 category vehicles.

(*3) Commission Implementing Regulation (EU) 2025/1706 of 25 July 2025 laying down rules, procedures and testing methodologies for the application of Regulation (EU) 2024/1257 as regards exhaust and evaporative emission type-approval of vehicles of categories M1 and N1 and amending Implementing Regulation (EU) 2020/683(OJ L, 2025/1706, 5.9.2025, ELI: http://data.europa.eu/eli/reg_impl/2025/1706/oj).

(*4) Commission Implementing Regulation (EU) 2025/1707 of 25 July 2025 laying down rules for the application of Regulation (EU) 2024/1257 of the European Parliament and of the Council of the European Parliament and of the Council as regards specific methods, requirements and tests, including compliance thresholds, for OBFCM devices and OBM systems, characteristics and performance of driver warning systems and inducement methods and methods to assess their operation, EVP format and data and methods of communication of EVP data of motor vehicles of categories M_1 and N_1 (OJ L, 2025/1707, 5.9.2025, ELI: http://data.europa.eu/eli/reg_impl/2025/1707/oj).

The item and subject entries listed in the table above shall apply for the purpose of information to be provided in accordance with Commission Implementing Regulation (EU) 2020/683, Annex II, Part III from 6 December 2022 for new whole-vehicle type-approvals and from 6 December 2024 for existing approvals.

Compliance with Regulation (EU) 2019/2144 is mandatory, however, a separate type-approval under that Regulation is not foreseen as it represents the collection of individual items.

Compliance with items from G2 to G12 is mandatory, however, only one type-approval either under Regulation (EC) No 715/2007 or under Regulation (EC) No 595/2009 is foreseen depending on the scope.

▼M4

Appendix 1

EXPLANATORY NOTES

to the tables for vehicles produced in small series

The requirements laid down in Table 1 for ‘Small series scheme I’ apply provided that:

— the vehicle type is not based on or derived from a vehicle produced in large series, including those for EU or third markets; and

— the manufacturer’s combined number of units, of all its categories M and N vehicle types registered, made available on the market or entered into service annually in the Union does not exceed 1 500.

In all other cases, the requirements laid down in Table 1 for ‘Small series scheme II’ and in Table 2 apply.

X: Full application of the regulatory act as follows:

(a) a type-approval certificate shall be required;

(b) tests and checks shall be conducted by the technical service or the manufacturer under the conditions laid down in Articles 67 to 81;

(c) the test report shall be drafted in accordance with Annex III;

(d) Conformity of Production shall be ensured.

A: Application of the regulatory act as follows:

(a) all requirements of the regulatory act shall be fulfilled unless otherwise stated;

(b) a type-approval certificate is not required;

(c) tests and checks shall be conducted by the technical service or the manufacturer under the conditions laid down in Articles 67 to 81;

(d) the test report shall be drafted in accordance with Annex III;

(e) Conformity of Production shall be ensured.

B: Application of the regulatory act as follows:

Same as for explanatory note ‘A’ with the exception that the tests and checks may be performed by the manufacturer themselves, subject to the agreement of the approval authority.

C: Application of the regulatory act as follows:

(a) the technical requirements from the regulatory act shall be fulfilled, but with different transitional provision;

(b) a type-approval certificate is not required;

(c) tests and checks shall be conducted by the technical service or the manufacturer under the conditions laid down in Articles 67 to 81;

(d) the test report shall be drafted in accordance with Annex III;

(e) Conformity of Production shall be ensured.

IF: Systems, separate technical units or components shall meet the requirements if fitted to the vehicle

n/a: Not applicable

The specific provisions set out in Table 1 and Table 2 cannot be mixed or combined.

▼M4

Table 1

Regulatory acts for EU type-approval of manually driven vehicles produced in small series pursuant to Article 41

			Small series scheme I		Small series scheme II	
Item	Subject	Regulatory act	M_1	N_1	M_1	N_1
A	RESTRAINT SYSTEMS, CRASH TESTING, FUEL SYSTEM INTEGRITY AND HIGH VOLTAGE ELECTRICAL SAFETY					
A1	Interior fittings	Regulation (EU) 2019/2144	B (a) Interior arrangement (i) Radii and protrusion requirements for switches, pull-knobs and the like, controls and general interior fittings. The requirements of paragraphs 5.1 to 5.6 of UN Regulation No 21 may be waived at the request of the manufacturer. The requirements of paragraph 5.2 of UN Regulation No 21 with the exception of paragraphs 5.2.3.1, 5.2.3.2 and 5.2.4 of that Regulation shall apply. (ii) Energy absorption tests on the upper dashboard. Energy absorption tests on the upper dashboard shall only be performed when the vehicle is not fitted with at least two front airbags or two static four-point harnesses. (iii) Energy absorption test on the rear part of the seats: not applicable	not in scope	B	not in scope

▼M4

			Small series scheme I		Small series scheme II	
Item	Subject	Regulatory act	M_1	N_1	M_1	N_1
			(b) Power-operation of windows, roof-panel systems and partition systems. All requirements of paragraph 5.8 of UN Regulation No 21 shall apply.			
A2	Seats and head restraints	Regulation (EU) 2019/2144	B (a) General requirements (i) Specifications Requirements of paragraph 5.2 of UN Regulation No 17 shall apply with the exception of paragraph 5.2.3 of that Regulation. (ii) Strength tests for seat backrest and head restraints. The requirements of paragraph 6.2 of UN Regulation No 17 shall apply. (iii) Unlocking and adjustment tests. The test shall be performed in accordance with the requirements of Annex 7 to UN Regulation No 17. (b) Head restraints (i) Specifications. Requirements of paragraphs 5.4, 5.5, 5.6, 5.10, 5.11 and 5.12 of UN Regulation No 17 shall apply with the exception of paragraph 5.5.2 of that Regulation.	B	B	B

▼M4

			Small series scheme I		Small series scheme II	
Item	Subject	Regulatory act	M_1	N_1	M_1	N_1
			(ii) Strength tests on head restraints. The test prescribed in paragraph 6.4 of UN Regulation No 17 shall be performed. (c) Special requirements regarding the protection of occupants from displaced luggage. The requirements of Annex 9 to UN Regulation No 17 may be waived at the request of the manufacturer.			
A3	Bus seats	Regulation (EU) 2019/2144	not in scope	not in scope	not in scope	not in scope
A4	Safety-belt anchorages	Regulation (EU) 2019/2144	B	B	B	B
A5	Safety-belts and restraint systems	Regulation (EU) 2019/2144	(a) Components X (b) Installation requirements B	(a) Components X (b) Installation requirements B	(a) Components X (b) Installation requirements B	(a) Components X (b) Installation requirements B
A6	Safety-belt reminders	Regulation (EU) 2019/2144	B	B	B	B
A7	Partitioning systems	Regulation (EU) 2019/2144	equipment	equipment	equipment	equipment
A8	Child restraint anchorages	Regulation (EU) 2019/2144	B	IF B	B	IF B

▼M4

			Small series scheme I		Small series scheme II	
Item	Subject	Regulatory act	M_1	N_1	M_1	N_1
A9	Child restraint systems (IF)	Regulation (EU) 2019/2144	X	X	X	X
A10	Enhanced child restraint systems (IF)	Regulation (EU) 2019/2144	X	X	X	X
A11	Front underrun protection	Regulation (EU) 2019/2144	not in scope	not in scope	not in scope	not in scope
A12	Rear underrun protection	Regulation (EU) 2019/2144	B	B	B	B
A13	Lateral protection	Regulation (EU) 2019/2144	not in scope	not in scope	not in scope	not in scope
A14	Fuel tank safety (IF)	Regulation (EU) 2019/2144	B (a) Liquid fuel tanks (b) Installation in vehicle	B (a) Liquid fuel tanks (b) Installation in vehicle	B (a) Liquid fuel tanks (b) Installation in vehicle	B (a) Liquid fuel tanks (b) Installation in vehicle
A15	Liquified petroleum gas safety (IF)	Regulation (EU) 2019/2144	(a) Components X (b) Installation B	(a) Components X (b) Installation B	(a) Components X (b) Installation B	(a) Components X (b) Installation B
A16	Compressed and liquified natural gas safety (IF)	Regulation (EU) 2019/2144	(a) Components X (b) Installation B	(a) Components X (b) Installation B	(a) Components X (b) Installation B	(a) Components X (b) Installation B
A17	Hydrogen safety (IF)	Regulation (EU) 2019/2144	X	X	X	X

▼M4

			Small series scheme I		Small series scheme II	
Item	Subject	Regulatory act	M_1	N_1	M_1	N_1
A18	Hydrogen system material qualification (IF)	Regulation (EU) 2019/2144	(a) Components X (b) Installation B	(a) Components X (b) Installation B	(a) Components X (b) Installation B	(a) Components X (b) Installation B
▼M8 A19	In-use electric safety (IF)	Regulation (EU) 2019/2144	C Date for the prohibition of the registration of vehicles not compliant with 03 Series of Amendments to UN Regulation No 100 ([1]): 7 July 2026	C Date for the prohibition of the registration of vehicles not compliant with 03 Series of Amendments to UN Regulation 100: 7 July 2026	C Date for the prohibition of the registration of vehicles not compliant with 03 Series of Amendments to UN Regulation 100: 7 July 2026	C Date for the prohibition of the registration of vehicles not compliant with 03 Series of Amendments to UN Regulation 100: 7 July 2026
▼M4 A20	Frontal off-set impact	Regulation (EU) 2019/2144	B Shall apply to vehicles fitted with front airbags. May comply with A21 Frontal full-width impact instead, at the choice of the manufacturer. Vehicles not fitted with airbags shall comply with A22 Protective steering (in full)	B Shall apply to vehicles fitted with front airbags. May comply with A21 Frontal full-width impact instead, at the choice of the manufacturer. Vehicles not fitted with airbags shall comply with A22 Protective steering (in full) Completed vehicles are deemed to comply with the frontal off-set impact requirements provided that compliance has been demonstrated for at least the van or chassis-cab configuration, with appropriate powertrain, as part of a previous-stage type-approval, irrespective of the mass in running order increase	B	B Completed vehicles are deemed to comply with the frontal off-set impact requirements provided that compliance has been demonstrated for at least the van or chassis-cab configuration, with appropriate powertrain, as part of a previous-stage type-approval, irrespective of the mass in running order increase and the relevant restraint systems have not been modified to the extent that it would result in a decrease of the level of safety, as agreed by the technical service.

▼M4

			Small series scheme I		Small series scheme II	
Item	Subject	Regulatory act	M_1	N_1	M_1	N_1
				and the relevant restraint systems have not been modified to the extent that it would result in a decrease of the level of safety, as agreed by the technical service.		
A21	Frontal full-width impact	Regulation (EU) 2019/2144	B On voluntary basis	B On voluntary basis Completed vehicles are deemed to comply with the frontal full-width impact requirements provided that compliance has been demonstrated for at least the van or chassis-cab configuration, with appropriate powertrain, as part of a previous-stage type-approval, irrespective of the mass in running order increase and the relevant restraint systems have not been modified to the extent that it would result in a decrease of the level of safety, as agreed by the technical service.	B	B Completed vehicles are deemed to comply with the frontal full-width impact requirements provided that compliance has been demonstrated for at least the van or chassis-cab configuration, with appropriate powertrain, as part of a previous-stage type-approval, irrespective of the mass in running order increase and the relevant restraint systems have not been modified to the extent that it would result in a decrease of the level of safety, as agreed by the technical service.
A22	Protective steering	Regulation (EU) 2019/2144	B Shall apply to vehicles that do not comply with A20 Frontal off-set impact or A21 Frontal full-width impact	B Shall apply to vehicles that do not comply with A20 Frontal off-set impact or A21 Frontal full-width impact	B	B
A23	Replacement airbag	Regulation (EU) 2019/2144	equipment	equipment	equipment	equipment

▼M4

			Small series scheme I		Small series scheme II	
Item	Subject	Regulatory act	M_1	N_1	M_1	N_1
A24	Cab impact	Regulation (EU) 2019/2144	not in scope	B Test A is required for vehicles with a maximum permissible mass of 1 500 kg or more if compliance with A20 Frontal off-set impact, A21 Frontal full-width impact or A22 Protective steering was not demonstrated. Test C is required only for vehicles which have a separate cab. Completed vehicles are deemed to comply with cab impact requirements provided that compliance has been demonstrated for at least the van or chassis-cab configuration, with appropriate powertrain, as part of a previous-stage type-approval, irrespective of the mass in running order increase.	not in scope	B Test A is deemed to be fulfilled by means of A20 Frontal off-set impact, A21 Frontal full-width impact or A22 Protective steering. Test C is required only for vehicles which have a separate cab. Completed vehicles are deemed to comply with cab impact requirements provided that compliance has been demonstrated for at least the van or chassis-cab configuration, with appropriate powertrain, as part of a previous-stage type-approval, irrespective of the mass in running order increase.
A25	Side impact	Regulation (EU) 2019/2144	B Head form test The manufacturer shall supply the technical service with suitable information concerning a possible impact of the head of the dummy against the structure of the vehicle or the side glazing, if made of laminated glazing.	B Head form test The manufacturer shall supply the technical service with suitable information concerning a possible impact of the head of the dummy against the structure of the vehicle or the side glazing, if made of laminated glazing.	B	B Completed vehicles are deemed to comply with side impact requirements provided that compliance has been demonstrated for at least the van or chassis-cab configuration, with appropriate powertrain, as part of a previous-stage type-approval, irrespective of the mass in running order increase and the relevant restraint systems have not been modified to the

▼M4

			Small series scheme I		Small series scheme II	
Item	Subject	Regulatory act	M_1	N_1	M_1	N_1
			When such impact is proven likely to happen, then the partial test using the head form test described in paragraph 3.1 of Annex 8 to UN Regulation No 95 shall be conducted and the criterion specified in paragraph 5.2.1.1 of UN Regulation No 95 shall be met. In agreement with the technical service, the test procedure described in Annex 4 to UN Regulation No 21 may be used as an alternative to the test of UN Regulation No 95. Alternatively, a full-scale test in accordance with UN Regulation No 95 may be carried out.	When such impact is proven likely to happen, then the partial test using the head form test described in paragraph 3.1 of Annex 8 to UN Regulation No 95 shall be conducted and the criterion specified in paragraph 5.2.1.1 of UN Regulation No 95 shall be met. In agreement with the technical service, the test procedure described in Annex 4 to UN Regulation No 21 may be used as an alternative to the test of UN Regulation No 95. Alternatively, a full-scale test in accordance with UN Regulation No 95 may be carried out. Completed vehicles are deemed to comply with side impact requirements provided that compliance has been demonstrated for at least the van or chassis-cab configuration, with appropriate powertrain, as part of a previous-stage type-approval, irrespective of the mass in running order increase and the relevant restraint systems have		extent that it would result in a decrease of the level of safety, as agreed by the technical service.

▼M4

			Small series scheme I		Small series scheme II	
Item	Subject	Regulatory act	M_1	N_1	M_1	N_1
				not been modified to the extent that it would result in a decrease of the level of safety, as agreed by the technical service.		
A26	Pole side impact	Regulation (EU) 2019/2144	n/a	n/a	B	B Completed vehicles are deemed to comply with the pole side impact requirements provided that compliance has been demonstrated for at least the van or chassis-cab configuration, with appropriate powertrain, as part of a previous-stage type-approval, irrespective of the mass in running order increase and the relevant restraint systems have not been modified to the extent that it would result in a decrease of the level of safety, as agreed by the technical service.
A27	Rear impact	Regulation (EU) 2019/2144	n/a	n/a	B	B Completed vehicles are deemed to comply with rear impact requirements provided that compliance has been demonstrated for at least the van or chassis-cab configuration, with appropriate powertrain, as part of a previous-stage type-approval, irrespective of the mass in running order increase.

▼M4

			Small series scheme I		Small series scheme II	
Item	Subject	Regulatory act	M_1	N_1	M_1	N_1
A28	112-based eCall in-vehicles systems	Regulation (EU) 2015/758	n/a	n/a	n/a	n/a
B	VULNERABLE ROAD USERS, VISION AND VISIBILITY					
B1	Pedestrian leg and head protection	Regulation (EU) 2019/2144	C Date for refusal to grant EU type-approval: 7 January 2026 Date for the prohibition of the registration of vehicles: 7 July 2034	C Date for refusal to grant EU type-approval: 7 January 2026 Date for the prohibition of the registration of vehicles: 7 July 2034	C Date for refusal to grant EU type- approval: 7 January 2026 Date for the prohibition of the registration of vehicles: 7 July 2034	C Date for refusal to grant EU type-approval: 7 January 2026 Date for the prohibition of the registration of vehicles: 7 July 2034
B2	Enlarged head impact zone	Regulation (EU) 2019/2144	C Date for refusal to grant EU type-approval: 7 January 2026 Date for the prohibition of the registration of vehicles: 7 July 2034	C Date for refusal to grant EU type-approval: 7 January 2026 Date for the prohibition of the registration of vehicles: 7 July 2034	C Date for refusal to grant EU type- approval: 7 January 2026 Date for the prohibition of the registration of vehicles: 7 July 2034	C Date for refusal to grant EU type-approval: 7 January 2026 Date for the prohibition of the registration of vehicles: 7 July 2034
B3	Frontal protection system	Regulation (EU) 2019/2144	equipment	equipment	equipment	equipment

▼M4

			Small series scheme I		Small series scheme II	
Item	Subject	Regulatory act	M_1	N_1	M_1	N_1
B4	Advanced emergency braking for pedestrians and cyclists ahead	Regulation (EU) 2019/2144	IF B Date for refusal to grant EU type-approval: 7 July 2026 Date for the prohibition of the registration of vehicles: 7 July 2028	IF B Date for refusal to grant EU type-approval: 7 July 2026 Date for the prohibition of the registration of vehicles: 7 July 2028	B Not required for vehicles without a windscreen, with a foldable windscreen or with a windscreen where the maximum vertical distance between the top edge and lowest edge of the transparent surface does not exceed 300 mm (assessed excluding areas with less than 70 % transparency shade bands, dot-printed areas, text, graphics and transparent slots for regulatory sight lines) and where the R-point of the driver seat is not more than 450 mm from the ground level. Date for refusal to grant EU type- approval: 7 July 2026 Date for the prohibition of the registration of vehicles: 7 July 2028	B Not required for vehicles without a windscreen, with a foldable windscreen or with a windscreen where the maximum vertical distance between the top edge and lowest edge of the transparent surface does not exceed 300 mm (assessed excluding areas with less than 70 % transparency shade bands, dot-printed areas, text, graphics and transparent slots for regulatory sight lines) and where the R-point of the driver seat is not more than 450 mm from the ground level. Date for refusal to grant EU type-approval: 7 July 2026 Date for the prohibition of the registration of vehicles: 7 July 2028
B5	Pedestrian and cyclist collision warning	Regulation (EU) 2019/2144	not in scope	not in scope	not in scope	not in scope
B6	Blind spot information system	Regulation (EU) 2019/2144	not in scope	not in scope	not in scope	not in scope

▼M4

			Small series scheme I		Small series scheme II	
Item	Subject	Regulatory act	M_1	N_1	M_1	N_1
B7	Reversing detection	Regulation (EU) 2019/2144	n/a	n/a	B	B
B8	Forward vision	Regulation (EU) 2019/2144	B	B Date for refusal to grant EU type-approval: 7 July 2026 Date for the prohibition of the registration of vehicles: 7 July 2028	B	B Date for refusal to grant EU type-approval: 7 July 2026 Date for the prohibition of the registration of vehicles: 7 July 2028
B9	Heavy-duty vehicles direct vision	Regulation (EU) 2019/2144	not in scope	not in scope	not in scope	not in scope
B10	Safety glazing	Regulation (EU) 2019/2144	(a) Components X (b) Installation B	(a) Components X (b) Installation B	(a) Components X (b) Installation B	(a) Components X (b) Installation B
B11	Defrost/demist	Regulation (EU) 2019/2144	B Vehicles shall be fitted with an adequate windscreen defrosting and demisting device	B Vehicles shall be fitted with an adequate windscreen defrosting and demisting device	B Vehicles shall be fitted with an adequate windscreen defrosting and demisting device	B Vehicles shall be fitted with an adequate windscreen defrosting and demisting device
B12	Wash/wipe	Regulation (EU) 2019/2144	B Vehicles shall be fitted with adequate windscreen washing and wiping devices	B Vehicles shall be fitted with adequate windscreen washing and wiping devices	B Vehicles shall be fitted with adequate windscreen washing and wiping devices	B Vehicles shall be fitted with adequate windscreen washing and wiping devices
B13	Indirect vision devices	Regulation (EU) 2019/2144	(a) Components X (b) Installation on vehicle B	(a) Components X (b) Installation on vehicle B	(a) Components X (b) Installation on vehicle B	(a) Components X (b) Installation on vehicle B

▼M4

			Small series scheme I		Small series scheme II	
Item	Subject	Regulatory act	M_1	N_1	M_1	N_1
B14	Acoustic Vehicle Alerting Systems	Regulation (EU) No 540/2014	A	A	A	A
C	VEHICLE CHASSIS, BRAKING, TYRES AND STEERING					
C1	Steering equipment	Regulation (EU) 2019/2144	B	B	B	B
C2	Lane departure warning	Regulation (EU) 2019/2144	not in scope	not in scope	not in scope	not in scope
C3	Emergency lane keeping	Regulation (EU) 2019/2144	IF B	IF B	B Not required for vehicles without a windscreen, with a foldable windscreen or with a windscreen where the maximum vertical distance between the top edge and lowest edge of the transparent surface does not exceed 300 mm (assessed excluding areas with less than 70 % transparency shade bands, dot-printed areas, text, graphics and transparent slots for regulatory sight lines) and where the R-point of the driver seat is not more than 450 mm from the ground level.	B Not required for vehicles without a windscreen, with a foldable windscreen or with a windscreen where the maximum vertical distance between the top edge and lowest edge of the transparent surface does not exceed 300 mm (assessed excluding areas with less than 70 % transparency shade bands, dot-printed areas, text, graphics and transparent slots for regulatory sight lines) and where the R-point of the driver seat is not more than 450 mm from the ground level.

▼M4

			Small series scheme I		Small series scheme II	
Item	Subject	Regulatory act	M_1	N_1	M_1	N_1
C4	Braking	Regulation (EU) 2019/2144	A	A	A	A
C5	Replacement braking parts	Regulation (EU) 2019/2144	equipment	equipment	equipment	equipment
C6	Brake assist	Regulation (EU) 2019/2144	IF B	IF B	B	B
C7	Stability control	Regulation (EU) 2019/2144	IF B	IF B	B	B
C8	Advanced emergency braking on heavy-duty vehicles	Regulation (EU) 2019/2144	not in scope	not in scope	not in scope	not in scope
C9	Advanced emergency braking on light-duty vehicles	Regulation (EU) 2019/2144	IF B	IF B	B Not required for vehicles without a windscreen, with a foldable windscreen or with a windscreen where the maximum vertical distance between the top edge and lowest edge of the transparent surface does not exceed 300 mm (assessed excluding areas with less than 70 % transparency shade bands, dot-printed areas, text, graphics and transparent slots for regulatory sight lines) and where the R-point of the driver seat is not more than 450 mm from the ground level.	B Not required for vehicles without a windscreen, with a foldable windscreen or with a windscreen where the maximum vertical distance between the top edge and lowest edge of the transparent surface does not exceed 300 mm (assessed excluding areas with less than 70 % transparency shade bands, dot-printed areas, text, graphics and transparent slots for regulatory sight lines) and where the R-point of the driver seat is not more than 450 mm from the ground level.

▼M4

			Small series scheme I		Small series scheme II	
Item	Subject	Regulatory act	M_1	N_1	M_1	N_1
C10	Tyre safety and environmental performance	Regulation (EU) 2019/2144	X	X	X	X
C11	Spare wheels and run-flat systems (IF)	Regulation (EU) 2019/2144	X	X	X	X
C12	Retreaded tyres	Regulation (EU) 2019/2144	equipment	equipment	equipment	equipment
C13	Tyre pressure monitoring for light-duty vehicles	Regulation (EU) 2019/2144	n/a	n/a	B	B
C14	Tyre pressure monitoring for heavy-duty vehicles	Regulation (EU) 2019/2144	not in scope	not in scope	not in scope	not in scope
C15	Tyre installation	Regulation (EU) 2019/2144	B	B	B	B
C16	Replacement wheels	Regulation (EU) 2019/2144	equipment	equipment	equipment	equipment
D	ON-BOARD INSTRUMENTS, ELECTRICAL SYSTEM, VEHICLE LIGHTING AND PROTECTION AGAINST UNAUTHORISED USE, INCLUDING CYBERATTACKS					
D1	Audible warning	Regulation (EU) 2019/2144	(a) Components X (b) Installation on vehicle B	(a) Components X (b) Installation on vehicle B	(a) Components X (b) Installation on vehicle B	(a) Components X (b) Installation on vehicle B

▼M4

			Small series scheme I		Small series scheme II	
Item	Subject	Regulatory act	M_1	N_1	M_1	N_1
D2	Radio interference (electromagnetic compatibility)	Regulation (EU) 2019/2144	B	B	B	B
D3	Protection against unauthorised use, immobiliser and alarm systems	Regulation (EU) 2019/2144	A The provisions of paragraph 8.3.1.1.1 of UN Regulation No 116 may be applied instead of paragraph 8.3.1.1.2 of that Regulation regardless of the type of powertrain. VAS: (a) Components X (b) Installation B	A The provisions of paragraph 8.3.1.1.1 of UN Regulation No 116 may be applied instead of paragraph 8.3.1.1.2 of that Regulation regardless of the type of powertrain. VAS: (a) Components X (b) Installation B	A The provisions of paragraph 8.3.1.1.1 of UN Regulation No 116 may be applied instead of paragraph 8.3.1.1.2 of that Regulation regardless of the type of powertrain. VAS: (a) Components X (b) Installation B	A The provisions of paragraph 8.3.1.1.1 of UN Regulation No 116 may be applied instead of paragraph 8.3.1.1.2 of that Regulation regardless of the type of powertrain. VAS: (a) Components X (b) Installation B
D4	Protection of vehicle against cyberattacks	Regulation (EU) 2019/2144	B Only for vehicles fitted with lane keeping system, adaptive cruise control or other likewise systems	B Only for vehicles fitted with lane keeping system, adaptive cruise control or other likewise systems	B	B
D5	Speedometer	Regulation (EU) 2019/2144	B	B	B	B
D6	Odometer	Regulation (EU) 2019/2144	B	B	B	B
D7	Speed limitation devices	Regulation (EU) 2019/2144	not in scope	not in scope	not in scope	not in scope

▼M4

			Small series scheme I		Small series scheme II	
Item	Subject	Regulatory act	M_1	N_1	M_1	N_1
D8	Intelligent speed assistance	Regulation (EU) 2019/2144	n/a	n/a	B Not required for vehicles without a windscreen, with a foldable windscreen or with a windscreen where the maximum vertical distance between the top edge and lowest edge of the transparent surface does not exceed 300 mm (assessed excluding areas with less than 70 % transparency shade bands, dot-printed areas, text, graphics and transparent slots for regulatory sight lines) and where the R-point of the driver seat is not more than 450 mm from the ground level.	B Not required for vehicles without a windscreen, with a foldable windscreen or with a windscreen where the maximum vertical distance between the top edge and lowest edge of the transparent surface does not exceed 300 mm (assessed excluding areas with less than 70 % transparency shade bands, dot-printed areas, text, graphics and transparent slots for regulatory sight lines) and where the R-point of the driver seat is not more than 450 mm from the ground level.
D9	Identification of controls, tell-tales and indicators	Regulation (EU) 2019/2144	A	A	A	A
D10	Heating systems	Regulation (EU) 2019/2144	B	B	B	B
D11	Light signalling devices	Regulation (EU) 2019/2144	X	X	X	X
D12	Road illumination devices	Regulation (EU) 2019/2144	X	X	X	X

▼M4

			Small series scheme I		Small series scheme II	
Item	Subject	Regulatory act	M_1	N_1	M_1	N_1
D13	Retro-reflective devices	Regulation (EU) 2019/2144	X	X	X	X
D14	Light sources	Regulation (EU) 2019/2144	X	X	X	X
D15	Installation of light signalling, road illumination and retro-reflective devices	Regulation (EU) 2019/2144	B Daytime Running Lamps (DRL) shall be fitted to a new type of vehicle	B Daytime Running Lamps (DRL) shall be fitted to a new type of vehicle	B Daytime Running Lamps (DRL) shall be fitted to a new type of vehicle	B Daytime Running Lamps (DRL) shall be fitted to a new type of vehicle
D16	Emergency stop signal	Regulation (EU) 2019/2144	B Only for vehicles fitted with electronically controlled anti-lock braking system	B Only for vehicles fitted with electronically controlled anti-lock braking system	B	B
D17	Headlamp cleaners (IF)	Regulation (EU) 2019/2144	IF B	IF B	IF B	IF B
D18	Gear shift indicator	Regulation (EU) 2019/2144	n/a	not in scope	n/a	not in scope
E	DRIVER AND SYSTEM BEHAVIOUR					
E1	Alcohol interlock installation facilitation	Regulation (EU) 2019/2144	A	A	A	A

▼M4

			Small series scheme I		Small series scheme II	
Item	Subject	Regulatory act	M_1	N_1	M_1	N_1
E2	Driver drowsiness and attention warning	Regulation (EU) 2019/2144	n/a	n/a	B	B
▼M8 E3	Advanced driver distraction warning	Regulation (EU) 2019/2144	n/a	n/a	C Date for refusal to grant EU type- approval: 7 July 2026 Date for the prohibition of the registration of vehicles: 7 July 2028 Not required for vehicles where the R-point of the driver seat is not more than 450 mm from the ground level.	C Date for refusal to grant EU type-approval: 7 July 2026 Date for the prohibition of the registration of vehicles: 7 July 2028 Not required for vehicles where the R-point of the driver seat is not more than 450 mm from the ground level.
▼M4 E4	Driver availability monitoring system (in case of automated vehicles)	Regulation (EU) 2019/2144	IF B	IF B	IF B	IF B
E5	Event data recorder	Regulation (EU) 2019/2144	n/a	n/a	B	B
E6	Systems to replace driver's control (in case of automated vehicles)	Regulation (EU) 2019/2144	IF B	No requirement yet	IF B	No requirement yet

▼M4

			Small series scheme I		Small series scheme II	
Item	Subject	Regulatory act	M_1	N_1	M_1	N_1
E7	Systems to provide the vehicle with information on state of vehicle and surrounding area (in case of automated vehicles)	Regulation (EU) 2019/2144	IF B	No requirement yet	IF B	No requirement yet
E8	Platooning (IF)	Regulation (EU) 2019/2144	No requirement yet	No requirement yet	No requirement yet	No requirement yet
E9	Systems to provide safety information to other road users (in case of automated vehicles)	Regulation (EU) 2019/2144	No requirement yet	No requirement yet	No requirement yet	No requirement yet
F	GENERAL VEHICLE CONSTRUCTION AND FEATURES					
F1	Registration plate space	Regulation (EU) 2019/2144	B	B	B	B
F2	Reversing motion	Regulation (EU) 2019/2144	B Statement of compliance	B Statement of compliance	B Statement of compliance	B Statement of compliance
F3	Door latches and hinges	Regulation (EU) 2019/2144	B (a) General requirements (Paragraph 5 of UN Regulation No 11) All the requirements shall apply. (b) Performance requirements (Paragraph 6 of UN Regulation No 11) Only the requirements of paragraph 6.1.5.4 and paragraph 6.3 of UN Regulation No 11 shall apply.	B (a) General requirements (Paragraph 5 of UN Regulation No 11) All the requirements shall apply. (b) Performance requirements (Paragraph 6 of UN Regulation No 11) Only the requirements of paragraph 6.1.5.4 and paragraph 6.3 of UN Regulation No 11 shall apply.	B	B

▼M4

			Small series scheme I		Small series scheme II	
Item	Subject	Regulatory act	M_1	N_1	M_1	N_1
F4	Door entry steps, handholds and running boards	Regulation (EU) 2019/2144	B	B	B	B
F5	External projections	Regulation (EU) 2019/2144	B (a) General specifications. The requirements of paragraph 5 of UN Regulation No 26 shall apply. (b) Particular specifications. The requirements of paragraph 6 of UN Regulation No 26 shall apply.	not in scope	B (a) General specifications. The requirements of paragraph 5 of UN Regulation No 26 shall apply. (b) Particular specifications. The requirements of paragraph 6 of UN Regulation No 26 shall apply.	not in scope
F6	External projections of commercial vehicle cabs	Regulation (EU) 2019/2144	not in scope	B (a) General specifications. The requirements of paragraph 5 of UN Regulation No 61 shall apply (b) Particular specifications. The requirements of paragraph 6 of UN Regulation No 61 shall apply.	not in scope	B (a) General specifications. The requirements of paragraph 5 of UN Regulation No 61 shall apply (b) Particular specifications. The requirements of paragraph 6 of UN Regulation No 61 shall apply.
F7	Statutory plate and vehicle identification number	Regulation (EU) 2019/2144	B	B	B	B
F8	Towing devices	Regulation (EU) 2019/2144	B	B	B	B

▼M4

			Small series scheme I		Small series scheme II	
Item	Subject	Regulatory act	M_1	N_1	M_1	N_1
F9	Wheel guards	Regulation (EU) 2019/2144	B	not in scope	B	not in scope
F10	Spray suppression systems	Regulation (EU) 2019/2144	not in scope	B	not in scope	B
F11	Masses and dimensions	Regulation (EU) 2019/2144	B The hill start ability test of Regulation (EU) 2021/535, Annex XIII, Part 2, Section B, Point 5. may be waived at the request of the manufacturer.	B The hill start ability test of Regulation (EU) 2021/535, Annex XIII, Part 2, Section B, Point 5. may be waived at the request of the manufacturer.	B	B
F12	Mechanical couplings	Regulation (EU) 2019/2144	IF (a) Components X (b) Installation B	IF (a) Components X (b) Installation B	IF (a) Components X (b) Installation B	IF (a) Components X (b) Installation B
F13	Vehicles intended for the transportation of dangerous goods (IF)	Regulation (EU) 2019/2144	not in scope	A	not in scope	A
F14	General bus construction	Regulation (EU) 2019/2144	not in scope	not in scope	not in scope	not in scope
F15	Bus strength of superstructure	Regulation (EU) 2019/2144	not in scope	not in scope	not in scope	not in scope
F16	Flammability in buses	Regulation (EU) 2019/2144	not in scope	not in scope	not in scope	not in scope

▼M4

			Small series scheme I		Small series scheme II	
Item	Subject	Regulatory act	M_1	N_1	M_1	N_1
G	ENVIRONMENTAL PERFORMANCE AND EMISSIONS					
G1	Sound level	Regulation (EU) No 540/2014	A	A	A	A
G2	Tailpipe emissions of vehicle in lab	Regulation (EC) No 715/2007	A Where the vehicle manufacturer uses an engine from another manufacturer, bench test data from the engine manufacturer are accepted provided that the engine management system is identical (i.e. having at least the same electronic control unit (ECU)). The power output test may be performed on a chassis dynamometer, taking into account the power loss in the transmission.	A Where the vehicle manufacturer uses an engine from another manufacturer, bench test data from the engine manufacturer are accepted provided that the engine management system is identical (i.e. having at least the same electronic control unit (ECU)). The power output test may be performed on a chassis dynamometer, taking into account the power loss in the transmission.	A	A
G2a	Determination of specific CO_2 emissions and fuel consumption of vehicle and device for monitoring on board the vehicle the consumption of fuel and/or electric energy	Regulation (EC) No 715/2007	A	A	A	A

▼M4

			Small series scheme I		Small series scheme II	
Item	Subject	Regulatory act	M_1	N_1	M_1	N_1
G3	Tailpipe emissions of engine in lab	Regulation (EC) No 595/2009	A Where the vehicle manufacturer uses an engine from another manufacturer, bench test data from the engine manufacturer are accepted provided that the engine management system is identical (i.e. having at least the same electronic control unit (ECU)). The power output test may be performed on a chassis dynamometer, taking into account the power loss in the transmission.	A Where the vehicle manufacturer uses an engine from another manufacturer, bench test data from the engine manufacturer are accepted provided that the engine management system is identical (i.e. having at least the same electronic control unit (ECU)). The power output test may be performed on a chassis dynamometer, taking into account the power loss in the transmission.	A	A
G3a	Determination of specific CO_2 emissions and fuel consumption of vehicle	Regulation (EC) No 595/2009	A	A	A	A
G3b	Determination of specific energy efficiency performance of trailer	Regulation (EC) No 595/2009	not in scope	not in scope	not in scope	not in scope
G4	Tailipipe emissions on the road	Regulation (EC) No 715/2007 Regulation (EC) No 595/2009	A	A	A	A

▼M4

			Small series scheme I		Small series scheme II	
Item	Subject	Regulatory act	M_1	N_1	M_1	N_1
G5	Durability of tailpipe emissions	Regulation (EC) No 715/2007 Regulation (EC) No 595/2009	A	A	A	A
G6	Crankcase emissions	Regulation (EC) No 715/2007 Regulation (EC) No 595/2009	A	A	A	A
G7	Evaporative emissions	Regulation (EC) No 715/2007	A	A	A	A
G8	Low-temperature tailpipe emissions in lab	Regulation (EC) No 715/2007	A	A	A	A
G9	On-board diagnostics	Regulation (EC) No 715/2007 Regulation (EC) No 595/2009	The vehicle shall be fitted with an OBD system that shall be designed, constructed and installed as to enable it to identify types of deterioration or malfunction over the entire life of the vehicle and record at least the malfunction of the engine management system. The OBD-interface shall be able to communicate with commonly available diagnostic tools.	The vehicle shall be fitted with an OBD system that shall be designed, constructed and installed as to enable it to identify types of deterioration or malfunction over the entire life of the vehicle and record at least the malfunction of the engine management system. The OBD-interface shall be able to communicate with commonly available diagnostic tools.	A	A
G10	Absence of defeat device	Regulation (EC) No 715/2007 Regulation (EC) No 595/2009	A	A	A	A

▼M4

			Small series scheme I		Small series scheme II	
Item	Subject	Regulatory act	M_1	N_1	M_1	N_1
G11	Auxiliary emissions strategies	Regulation (EC) No 715/2007 Regulation (EC) No 595/2009	A	A	A	A
G12	Anti-tampering	Regulation (EC) No 715/2007 Regulation (EC) No 595/2009	A	A	A	A
G13	Recyclability	Directive 2005/64/EC	n/a However, Annex V on prohibition of reuse of the specified component parts shall apply.	n/a However, Annex V on prohibition of reuse of the specified component parts shall apply.	n/a However, Annex V on prohibition of reuse of the specified component parts shall apply.	n/a However, Annex V on prohibition of reuse of the specified component parts shall apply.
G14	Air-conditioning systems	Directive 2006/40/EC	A	A	A	A
H	ACCESS TO VEHICLE INFORMATION AND SOFTWARE UPDATE					
H1	Access to vehicle OBD information and vehicle repair and maintenance information	Regulation (EU) 2018/858, Articles 61 to 66 and Annex X	X	X	X	X
H2	Software update	Regulation (EU) 2018/858 UN Regulation No 156	X	X	X	X

(1) Regulation No 100 of the Economic Commission for Europe of the United Nations (UN/ECE) – Uniform provisions concerning the approval of vehicles with regard to specific requirements for the electric power train [2024/1955] (OJ L, 2024/1955, 26.7.2024, ELI: http://data.europa.eu/eli/reg/2024/1955/oj).

▼M4

Table 2

Regulatory acts for EU type-approval of fully automated vehicles (as defined in Article 3(22) of Regulation (EU) 2019/2144) produced in small series pursuant to Article 41

Item	Subject	Regulatory act(the scope of the regulatory act remains unchanged)	Fully automated vehicles of categories N_1, N_2 and N_3 without driver seat and without occupants	Fully automated vehicles of categories N_1, N_2, N_3, M_1, M_2, M_3 without driver seat, with occupants	Dual mode vehicles: vehicles with a driver seat designed and constructed to be driven by the driver in the 'manual driving mode' and to be driven by the automated driving system (ADS) without any driver supervision in the 'fully automated driving mode'	Specific provisions to be applied if letter A is used (i.e. the approval is not possible under the regulatory act because it does not yet include specific requirements for fully automated vehicles) No provision shall apply if the vehicle category is not in the scope of the base regulatory act.
A	RESTRAINT SYSTEMS, CRASH TESTING, FUEL SYSTEM INTEGRITY AND HIGH VOLTAGE ELECTRICAL SAFETY					
A1	Interior fittings	Regulation (EU) 2019/2144	not in scope	A	X for manual driving mode. A for fully automated driving mode	All windows, roof-panels and partitions for use by occupants shall be equipped with an auto-reversing device in order to make a driver-controlled switch redundant. For bidirectional vehicles (i.e. vehicles with no distinguishable rear/front and that can be driven in both directions), requirements shall be met in both directions. Alternative requirements leading to an equivalent level of safety to the satisfaction of the type-approval authority are permitted if meeting all the requirements in both directions is incompatible with the bidirectional use.
A2	Seats and head restraints	Regulation (EU) 2019/2144	n/a	X A (for bidirectional vehicles)	X	For bidirectional vehicles, requirements shall be met in both directions. Alternative requirements leading to an equivalent level of safety to the satisfaction of the type-approval authority are permitted if meeting all the requirements in both directions is incompatible with the bidirectional use.

▼M4

Item	Subject	Regulatory act(the scope of the regulatory act remains unchanged)	Fully automated vehicles of categories N_1, N_2 and N_3 without driver seat and without occupants	Fully automated vehicles of categories N_1, N_2, N_3, M_1, M_2, M_3 without driver seat, with occupants	Dual mode vehicles: vehicles with a driver seat designed and constructed to be driven by the driver in the 'manual driving mode' and to be driven by the automated driving system (ADS) without any driver supervision in the 'fully automated driving mode'	Specific provisions to be applied if letter A is used (i.e. the approval is not possible under the regulatory act because it does not yet include specific requirements for fully automated vehicles) No provision shall apply if the vehicle category is not in the scope of the base regulatory act.
A3	Bus seats	Regulation (EU) 2019/2144	n/a	X A (for bidirectional vehicles)	X	For bidirectional vehicles, requirements shall be met in both directions. Alternative requirements leading to an equivalent level of safety to the satisfaction of the type-approval authority are permitted if meeting all the requirements in both directions is incompatible with the bidirectional use.
A4	Safety-belt anchorages	Regulation (EU) 2019/2144	n/a	A	X	For vehicle with no driver seat, any seat in the first seat row shall be considered to be a front passenger seat. Paragraphs 5.1.6.2.1 and 5.1.6.2.2 of UN Regulation No 14 are not applicable.
A5	Safety-belts and restraint systems	Regulation (EU) 2019/2144	n/a	A	X	For vehicles without driver seat, any seat in the first seat row shall be considered to be a front passenger seat.
A6	Safety-belt reminders	Regulation (EU) 2019/2144	n/a	A	X	For vehicles without driver seat, any seat in the first seat row shall be considered to be a front passenger seat. The safety-belt reminder signal shall be transmitted to the automated driving system (ADS) and the remote intervention operator (if applicable) as defined in ►C2 Commission Implementing Regulation (EU) 2022/1426 [1] ◄.

[1] Commission Implementing Regulation (EU) 2022/1426 of 5 August 2022 laying down rules for the application of Regulation (EU) 2019/2144 of the European Parliament and of the Council as regards uniform procedures and technical specifications for the type-approval of the automated driving system (ADS) of fully automated vehicles (OJ L 221, 26.8.2022, p. 1).

▼M4

Item	Subject	Regulatory act(the scope of the regulatory act remains unchanged)	Fully automated vehicles of categories N_1, N_2 and N_3 without driver seat and without occupants	Fully automated vehicles of categories N_1, N_2, N_3, M_1, M_2, M_3 without driver seat, with occupants	Dual mode vehicles: vehicles with a driver seat designed and constructed to be driven by the driver in the 'manual driving mode' and to be driven by the automated driving system (ADS) without any driver supervision in the 'fully automated driving mode'	Specific provisions to be applied if letter A is used (i.e. the approval is not possible under the regulatory act because it does not yet include specific requirements for fully automated vehicles) No provision shall apply if the vehicle category is not in the scope of the base regulatory act.
A7	Partitioning systems	Regulation (EU) 2019/2144	equipment	equipment	equipment	
A8	Child restraint anchorages	Regulation (EU) 2019/2144	n/a	X	X	
A9	Child restraint systems (IF)	Regulation (EU) 2019/2144	n/a	X	X	
A10	Enhanced child restraint systems (IF)	Regulation (EU) 2019/2144	n/a	X	X	
A11	Front underrun protection	Regulation (EU) 2019/2144	X A (for bidirectional vehicles)	X A (for bidirectional vehicles)	X	For bidirectional vehicles, requirements shall be met in both directions. Alternative requirements leading to an equivalent level of safety to the satisfaction of the type-approval authority are permitted if meeting all the requirements in both directions is incompatible with the bidirectional use.
A12	Rear underrun protection	Regulation (EU) 2019/2144	X A (for bidirectional vehicles)	X A (for bidirectional vehicles)	X	For bidirectional vehicles, requirements shall be met in both directions. Alternative requirements leading to an equivalent level of safety to the satisfaction of the type-approval authority are permitted if meeting all the requirements in both directions is incompatible with the bidirectional use.

▼M4

Item	Subject	Regulatory act(the scope of the regulatory act remains unchanged)	Fully automated vehicles of categories N_1, N_2 and N_3 without driver seat and without occupants	Fully automated vehicles of categories N_1, N_2, N_3, M_1, M_2, M_3 without driver seat, with occupants	Dual mode vehicles: vehicles with a driver seat designed and constructed to be driven by the driver in the 'manual driving mode' and to be driven by the automated driving system (ADS) without any driver supervision in the 'fully automated driving mode'	Specific provisions to be applied if letter A is used (i.e. the approval is not possible under the regulatory act because it does not yet include specific requirements for fully automated vehicles) No provision shall apply if the vehicle category is not in the scope of the base regulatory act.
A13	Lateral protection	Regulation (EU) 2019/2144	X A (for bidirectional vehicles)	X A (for bidirectional vehicles)	X	For bidirectional vehicles, requirements shall be met in both directions. Alternative requirements leading to an equivalent level of safety to the satisfaction of the type-approval authority are permitted if meeting all the requirements in both directions is incompatible with the bidirectional use.
A14	Fuel tank safety (IF)	Regulation (EU) 2019/2144	X	X	X	
A15	Liquified petroleum gas safety (IF)	Regulation (EU) 2019/2144	A	A	X (for manual driving mode) A (for fully automated driving mode)	The required malfunction or fault indication shall be replaced by a signal transmitted to the automated driving system and remote intervention operator (if applicable).
A16	Compressed and liquified natural gas safety (IF)	Regulation (EU) 2019/2144	X	X	X	
A17	Hydrogen safety (IF)	Regulation (EU) 2019/2144	X	X	X	
A18	Hydrogen system material qualification (IF)	Regulation (EU) 2019/2144	X	X	X	

▼M4

Item	Subject	Regulatory act(the scope of the regulatory act remains unchanged)	Fully automated vehicles of categories N_1, N_2 and N_3 without driver seat and without occupants	Fully automated vehicles of categories N_1, N_2, N_3, M_1, M_2, M_3 without driver seat, with occupants	Dual mode vehicles: vehicles with a driver seat designed and constructed to be driven by the driver in the 'manual driving mode' and to be driven by the automated driving system (ADS) without any driver supervision in the 'fully automated driving mode'	Specific provisions to be applied if letter A is used (i.e. the approval is not possible under the regulatory act because it does not yet include specific requirements for fully automated vehicles) No provision shall apply if the vehicle category is not in the scope of the base regulatory act.
A19	In-use electric safety (IF)	Regulation (EU) 2019/2144	A	A	X (for manual driving mode) A (for fully automated driving mode)	The requirements for passenger compartment shall not apply to N vehicles with no passenger. The indications normally given to the driver ' shall be sent to the ADS and the remote intervention operator (if applicable)
A20	Frontal off-set impact	Regulation (EU) 2019/2144	Not applicable	A n/a for vehicles below 30 km/h	X	The 'R' point of the driver shall be considered to be the 'R' point of the foremost passenger. If the vehicle has no steering wheel or pedal cluster, the positioning of the steering wheel and pedal cluster shall not be taken into account. If the vehicle does not contain a driver or/and a co-driver seat, these positions should not be tested. For bidirectional vehicles, requirements shall be met in both directions. Alternative requirements leading to an equivalent level of safety to the satisfaction of the type-approval authority are permitted if meeting all the requirements in both directions is incompatible with the bidirectional use.
A21	Frontal full-width impact	Regulation (EU) 2019/2144	n/a	A n/a for vehicles below 30 km/h	X	The 'R' point of the driver shall be considered to be the 'R' point of the foremost passenger. For bidirectional vehicles, requirements shall be met in both directions. Alternative requirements leading to an equivalent level of safety to the satisfaction of the type-approval authority are permitted if meeting all the requirements in both directions is incompatible with the bidirectional use.

▼M4

Item	Subject	Regulatory act(the scope of the regulatory act remains unchanged)	Fully automated vehicles of categories N_1, N_2 and N_3 without driver seat and without occupants	Fully automated vehicles of categories N_1, N_2, N_3, M_1, M_2, M_3 without driver seat, with occupants	Dual mode vehicles: vehicles with a driver seat designed and constructed to be driven by the driver in the 'manual driving mode' and to be driven by the automated driving system (ADS) without any driver supervision in the 'fully automated driving mode'	Specific provisions to be applied if letter A is used (i.e. the approval is not possible under the regulatory act because it does not yet include specific requirements for fully automated vehicles) No provision shall apply if the vehicle category is not in the scope of the base regulatory act.
A22	Protective steering	Regulation (EU) 2019/2144	n/a	n/a	X	
A23	Replacement airbag	Regulation (EU) 2019/2144	n/a	equipment	equipment	
A24	Cab impact	Regulation (EU) 2019/2144	n/a	X A (for bidirectional vehicles)	X	For bidirectional vehicles, requirements shall be met in both directions. Alternative requirements leading to an equivalent level of safety to the satisfaction of the type-approval authority are permitted if meeting all the requirements in both directions is incompatible with the bidirectional use.
A25	Side impact	Regulation (EU) 2019/2144	n/a	A n/a for vehicles below 30 km/h	X	The collision test will be carried out on the side or sides as agreed between the manufacturer and type approval authority. For bidirectional vehicles, requirements shall be met in both directions. Alternative requirements leading to an equivalent level of safety to the satisfaction of the type-approval authority are permitted if meeting all the requirements in both directions is incompatible with the bidirectional use.

▼M4

Item	Subject	Regulatory act(the scope of the regulatory act remains unchanged)	Fully automated vehicles of categories N_1, N_2 and N_3 without driver seat and without occupants	Fully automated vehicles of categories N_1, N_2, N_3, M_1, M_2, M_3 without driver seat, with occupants	Dual mode vehicles: vehicles with a driver seat designed and constructed to be driven by the driver in the 'manual driving mode' and to be driven by the automated driving system (ADS) without any driver supervision in the 'fully automated driving mode'	Specific provisions to be applied if letter A is used (i.e. the approval is not possible under the regulatory act because it does not yet include specific requirements for fully automated vehicles) No provision shall apply if the vehicle category is not in the scope of the base regulatory act.
A26	Pole side impact	Regulation (EU) 2019/2144	n/a	A n/a for vehicles below 30 km/h	X	The 'R' point of the driver's seat shall be considered to be the 'R' point of the foremost passenger seat. The dynamic pole side impact test will be carried out on the side or sides as agreed between the manufacturer and type approval authority. For bidirectional vehicles, requirements shall be met in both directions. Alternative requirements leading to an equivalent level of safety to the satisfaction of the type-approval authority are permitted if meeting all the requirements in both directions is incompatible with the bidirectional use.
A27	Rear impact	Regulation (EU) 2019/2144	n/a	X A (for bidirectional vehicles)	X	For bidirectional vehicles, requirements shall be met in both directions. Alternative requirements leading to an equivalent level of safety to the satisfaction of the type-approval authority are permitted if meeting all the requirements in both directions is incompatible with the bidirectional use.
A28	112-based eCall in-vehicles systems	Regulation (EU) 2015/758	n/a	A	X (for manual drivingmode) A (for fully automated driving mode)	For fully automated driving mode, the ADS takes care of the functionality.

▼M4

Item	Subject	Regulatory act(the scope of the regulatory act remains unchanged)	Fully automated vehicles of categories N_1, N_2 and N_3 without driver seat and without occupants	Fully automated vehicles of categories N_1, N_2, N_3, M_1, M_2, M_3 without driver seat, with occupants	Dual mode vehicles: vehicles with a driver seat designed and constructed to be driven by the driver in the 'manual driving mode' and to be driven by the automated driving system (ADS) without any driver supervision in the 'fully automated driving mode'	Specific provisions to be applied if letter A is used (i.e. the approval is not possible under the regulatory act because it does not yet include specific requirements for fully automated vehicles) No provision shall apply if the vehicle category is not in the scope of the base regulatory act.
B	VULNERABLE ROAD USERS, VISION AND VISIBILITY					
B1	Pedestrian leg and head protection	Regulation (EU) 2019/2144	X A(for bidirectional vehicles)	X A (for bidirectional vehicles)	X	For bidirectional vehicles, requirements shall be met in both directions. Alternative requirements leading to an equivalent level of safety to the satisfaction of the type-approval authority are permitted if meeting all the requirements in both directions is incompatible with the bidirectional use.
B2	Enlarged head impact zone	Regulation (EU) 2019/2144	X A(for bidirectional vehicles)	X A(for bidirectional vehicles)	X	For bidirectional vehicles, requirements shall be met in both directions. Alternative requirements leading to an equivalent level of safety to the satisfaction of the type-approval authority are permitted if meeting all the requirements in both directions is incompatible with the bidirectional use.
B3	Frontal protection system	Regulation (EU) 2019/2144	equipment	equipment	equipment	
B4	Advanced emergency braking for pedestrians and cyclists ahead	Regulation (EU) 2019/2144	n/a (functionality to be covered by the ADS)	n/a (functionality to be covered by the ADS)	X (for manual driving mode) n/a (for fully automated driving mode) (functionality to be covered by the ADS)	

▼M4

Item	Subject	Regulatory act(the scope of the regulatory act remains unchanged)	Fully automated vehicles of categories N_1, N_2 and N_3 without driver seat and without occupants	Fully automated vehicles of categories N_1, N_2, N_3, M_1, M_2, M_3 without driver seat, with occupants	Dual mode vehicles: vehicles with a driver seat designed and constructed to be driven by the driver in the 'manual driving mode' and to be driven by the automated driving system (ADS) without any driver supervision in the 'fully automated driving mode'	Specific provisions to be applied if letter A is used (i.e. the approval is not possible under the regulatory act because it does not yet include specific requirements for fully automated vehicles) No provision shall apply if the vehicle category is not in the scope of the base regulatory act.
B5	Pedestrian and cyclist collision warning	Regulation (EU) 2019/2144	n/a (functionality to be covered by the ADS)	n/a (functionality to be covered by the ADS)	X (for manual driving mode) n/a (for fully automated driving mode) (functionality to be covered by the ADS)	
B6	Blind spot information system	Regulation (EU) 2019/2144	n/a (functionality to be covered by the ADS)	n/a (functionality covered by the ADS)	X (for manual driving mode) n/a (for fully automated driving mode) (functionality covered by the ADS)	
B7	Reversing detection	Regulation (EU) 2019/2144	n/a (functionality covered by the ADS)	n/a (functionality covered by the ADS)	X (for manual driving mode) n/a (for fully automated driving mode) (functionality to be covered by the ADS)	
B8	Forward vision	Regulation (EU) 2019/2144	n/a	n/a	X (for manual driving mode) n/a (for fully automated driving mode) (functionality covered by the ADS)	

▼M4

Item	Subject	Regulatory act(the scope of the regulatory act remains unchanged)	Fully automated vehicles of categories N_1, N_2 and N_3 without driver seat and without occupants	Fully automated vehicles of categories N_1, N_2, N_3, M_1, M_2, M_3 without driver seat, with occupants	Dual mode vehicles: vehicles with a driver seat designed and constructed to be driven by the driver in the 'manual driving mode' and to be driven by the automated driving system (ADS) without any driver supervision in the 'fully automated driving mode'	Specific provisions to be applied if letter A is used (i.e. the approval is not possible under the regulatory act because it does not yet include specific requirements for fully automated vehicles) No provision shall apply if the vehicle category is not in the scope of the base regulatory act.
B9	Heavy-duty vehicles direct vision	Regulation (EU) 2019/2144	n/a (functionality covered by the ADS)	n/a (functionality covered by the ADS)	X (for manual driving mode) n/a (for fully automated driving mode)	
B10	Safety glazing	Regulation (EU) 2019/2144	n/a	A	X	Point 4.1.3 of Annex 24 is not applicable (no R-point available in relation to the installation of the windscreen). Any front exterior forward-facing glazing shall be regarded as windscreen. For bidirectional vehicles, requirements shall be met in both directions. Alternative requirements leading to an equivalent level of safety to the satisfaction of the type-approval authority are permitted if meeting all the requirements in both directions is incompatible with the bidirectional use.
B11	Defrost/demist	Regulation (EU) 2019/2144	n/a	n/a	X (for manual driving mode) n/a (for fully automated driving mode) (functionality covered by the ADS)	
B12	Wash/wipe	Regulation (EU) 2019/2144	n/a	n/a	X (for manual driving mode) n/a (for fully automated driving mode)	

▼M4

Item	Subject	Regulatory act(the scope of the regulatory act remains unchanged)	Fully automated vehicles of categories N_1, N_2 and N_3 without driver seat and without occupants	Fully automated vehicles of categories N_1, N_2, N_3, M_1, M_2, M_3 without driver seat, with occupants	Dual mode vehicles: vehicles with a driver seat designed and constructed to be driven by the driver in the 'manual driving mode' and to be driven by the automated driving system (ADS) without any driver supervision in the 'fully automated driving mode'	Specific provisions to be applied if letter A is used (i.e. the approval is not possible under the regulatory act because it does not yet include specific requirements for fully automated vehicles) No provision shall apply if the vehicle category is not in the scope of the base regulatory act.
B13	Indirect vision devices	Regulation (EU) 2019/2144	n/a (functionality covered by the ADS)	n/a (functionality covered by the ADS)	X (for manual driving mode) n/a (for fully automated driving mode)	
B14	Acoustic Vehicle Alerting Systems	Regulation (EU) No 540/2014	X	X	X	
C	VEHICLE CHASSIS, BRAKING, TYRES AND STEERING					
C1	Steering equipment	Regulation (EU) 2019/2144	A	A	X (for manual driving mode) A (for fully automated driving mode)	The basic steering (mechanical) requirements apply however: — the requirements applicable to the steering control (e. g. max steering forces) are not applicable; — the failure provisions and performance at 5.3 are not relevant if there's no driver but the failure notification should be made (digitally) available to the ADS and the remote intervention operator (if applicable). — The provisions of Annex 6-complex electronic systems need to be fulfilled and may be covered by the ADS safety concept. The ADS shall take care of the tasks assigned to the driver and driver steering assistance system.

▼M4

Item	Subject	Regulatory act(the scope of the regulatory act remains unchanged)	Fully automated vehicles of categories N_1, N_2 and N_3 without driver seat and without occupants	Fully automated vehicles of categories N_1, N_2, N_3, M_1, M_2, M_3 without driver seat, with occupants	Dual mode vehicles: vehicles with a driver seat designed and constructed to be driven by the driver in the 'manual driving mode' and to be driven by the automated driving system (ADS) without any driver supervision in the 'fully automated driving mode'	Specific provisions to be applied if letter A is used (i.e. the approval is not possible under the regulatory act because it does not yet include specific requirements for fully automated vehicles) No provision shall apply if the vehicle category is not in the scope of the base regulatory act.
C2	Lane departure warning	Regulation (EU) 2019/2144	n/a (functionality covered by the ADS)	n/a (functionality covered by the ADS)	X (for manual driving mode) n/a (for fully automated driving mode) (functionality covered by the ADS)	
C3	Emergency lane keeping	Regulation (EU) 2019/2144	n/a (functionality covered by the ADS)	n/a (functionality covered by the ADS)	X (for manual driving mode) n/a (for fully automated driving mode)	
C4	Braking	Regulation (EU) 2019/2144	A	A	X (for manual driving mode) A (for fully automated mode)	Activation of the brakes managed by the ADS in replacement of the driver and driver assistant systems. Each vehicle shall be fitted where applicable with — a service braking system — a secondary braking system — a parking braking system — an endurance braking system. (for vehicle categories covered by UN Regulation No 13) All Annexes to UN Regulation No 13, except for Annex 5 (Additional provisions applicable to certain vehicles as specified in the ADR), shall remain applicable.

▼M4

Item	Subject	Regulatory act(the scope of the regulatory act remains unchanged)	Fully automated vehicles of categories N_1, N_2 and N_3 without driver seat and without occupants	Fully automated vehicles of categories N_1, N_2, N_3, M_1, M_2, M_3 without driver seat, with occupants	Dual mode vehicles: vehicles with a driver seat designed and constructed to be driven by the driver in the 'manual driving mode' and to be driven by the automated driving system (ADS) without any driver supervision in the 'fully automated driving mode'	Specific provisions to be applied if letter A is used (i.e. the approval is not possible under the regulatory act because it does not yet include specific requirements for fully automated vehicles) No provision shall apply if the vehicle category is not in the scope of the base regulatory act.
						All muscular generated performances (e.g. secondary brake) shall be replaced by alternative supply. (to be performed by the ADS- need for a special test mode). Issue of failure to be covered (no driver as fallback). All the tell tales, indicators, warnings and information in accordance to UN Regulation No 13 or UN Regulation No 13-H (depending on the vehicle category) shall be sent to the ADS and the remote intervention operator (if applicable). When more than one control is required in UN Regulation No 13 (e.g. paragraph 5.2.1.2.1) this shall be replaced by two independent power sources. e.g. service brake activation and parking braking brake shall be activated by actuators with separated energy reserves, actuators and logic. The ADS safety concept shall cover the electronic systems of the braking system (including the interfaces and interactions with any other affected electronic systems of the vehicle). The ADS takes care of the tasks assigned to the driver and braking assistance systems.
C5	Replacement braking parts	Regulation (EU) 2019/2144	equipment	equipment	equipment	

▼M4

Item	Subject	Regulatory act(the scope of the regulatory act remains unchanged)	Fully automated vehicles of categories N_1, N_2 and N_3 without driver seat and without occupants	Fully automated vehicles of categories N_1, N_2, N_3, M_1, M_2, M_3 without driver seat, with occupants	Dual mode vehicles: vehicles with a driver seat designed and constructed to be driven by the driver in the 'manual driving mode' and to be driven by the automated driving system (ADS) without any driver supervision in the 'fully automated driving mode'	Specific provisions to be applied if letter A is used (i.e. the approval is not possible under the regulatory act because it does not yet include specific requirements for fully automated vehicles) No provision shall apply if the vehicle category is not in the scope of the base regulatory act.
C6	Brake assist	Regulation (EU) 2019/2144	n/a (functionality covered by the ADS	n/a(functionality covered by the ADS)	X (for manual driving mode) n/a (for fully automated driving mode) (functionality covered by the ADS)	
C7	Stability control	Regulation (EU) 2019/2144	n/a (functionality covered by the ADS	n/a (functionality covered by the ADS	X (for manual driving mode) n/a (for fully automated driving mode) (functionality covered by the ADS)	
C8	Advanced emergency braking on heavy-duty vehicles	Regulation (EU) 2019/2144	n/a (functionality covered by the ADS	n/a (functionality covered by the ADS	X (for manual driving mode) n/a (for fully automated driving mode) (functionality covered by the ADS)	
C9	Advanced emergency braking on light-duty vehicles	Regulation (EU) 2019/2144	n/a (functionality covered by the ADS)	n/a (functionality covered by the ADS)	X for manual driving mode Not applicable for fully automated driving mode (functionality covered by the ADS)	

▼M4

Item	Subject	Regulatory act(the scope of the regulatory act remains unchanged)	Fully automated vehicles of categories N_1, N_2 and N_3 without driver seat and without occupants	Fully automated vehicles of categories N_1, N_2, N_3, M_1, M_2, M_3 without driver seat, with occupants	Dual mode vehicles: vehicles with a driver seat designed and constructed to be driven by the driver in the 'manual driving mode' and to be driven by the automated driving system (ADS) without any driver supervision in the 'fully automated driving mode'	Specific provisions to be applied if letter A is used (i.e. the approval is not possible under the regulatory act because it does not yet include specific requirements for fully automated vehicles) No provision shall apply if the vehicle category is not in the scope of the base regulatory act.
C10	Tyre safety and environmental performance	Regulation (EU) 2019/2144	X	X	X	
C11	Spare wheels and run-flat systems (IF)	Regulation (EU) 2019/2144	A	A	X (for manual driving mode) A (for fully automated mode)	In the case of vehicles equipped with a Run-Flat Warning System the warning signal and the run-flat malfunction signal shall be replaced by signals transmitted to the ADS and the remote intervention operator (if applicable).
C12	Retreaded tyres	Regulation (EU) 2019/2144	equipment	equipment	equipment	
C13	Tyre pressure monitoring for light-duty vehicles	Regulation (EU) 2019/2144	A	A	X (for manual driving mode) A (for fully automated driving mode)	The warning signal shall be sent to the ADS and the remote intervention operator (if applicable).
C14	Tyre pressure monitoring for heavy-duty vehicles	Regulation (EU) 2019/2144	A	A	X (for manual driving mode) A (for fully automated driving mode)	The warning signal shall be sent to the ADS and the remote intervention operator (if applicable).
C15	Tyre installation	Regulation (EU) 2019/2144	A	A	X	The maximum speed warning label (in vehicle) shall not be required. The ADS shall not exceed the maximum speed capability of the tyres prescribed by the vehicle manufacturer.
C16	Replacement wheels	Regulation (EU) 2019/2144	equipment	equipment	equipment	

▼M4

Item	Subject	Regulatory act(the scope of the regulatory act remains unchanged)	Fully automated vehicles of categories N_1, N_2 and N_3 without driver seat and without occupants	Fully automated vehicles of categories N_1, N_2, N_3, M_1, M_2, M_3 without driver seat, with occupants	Dual mode vehicles: vehicles with a driver seat designed and constructed to be driven by the driver in the 'manual driving mode' and to be driven by the automated driving system (ADS) without any driver supervision in the 'fully automated driving mode'	Specific provisions to be applied if letter A is used (i.e. the approval is not possible under the regulatory act because it does not yet include specific requirements for fully automated vehicles) No provision shall apply if the vehicle category is not in the scope of the base regulatory act.
D	ON-BOARD INSTRUMENTS, ELECTRICAL SYSTEM, VEHICLE LIGHTING AND PROTECTION AGAINST UNAUTHORISED USE, INCLUDING CYBERATTACKS					
D1	Audible warning	Regulation (EU) 2019/2144	X	X	X	
D2	Radio interference (electromagnetic compatibility)	Regulation (EU) 2019/2144	A	A	X (for manual driving mode) A (for fully automated driving mode)	Test mode needed. In addition to the requirements EMC tests described in Annexes 4 to 22 to UN Regulation No 10, the following procedure before and during initial EMC tests shall be followed: 1. When a fully automated vehicle with an ADS is EMC tested, the ADS functions should be switched on and also work in active mode. However certain limitations in use case can be observed. Therefore, before executing the EMC test, the type-approval authority needs to be consulted about the test program to agree about the Pass/Fail criteria proposal made by the EMC lab according to paragraph 6.1.2 of UN Regulation No 10. Before testing the Technical Service has to prepare a test plan in conjunction with the manufacturer, which contains at least mode of operation, stimulated function(s), monitored function(s), pass/fail criterion (criteria) and intended emissions.

▼M4

Item	Subject	Regulatory act(the scope of the regulatory act remains unchanged)	Fully automated vehicles of categories N_1, N_2 and N_3 without driver seat and without occupants	Fully automated vehicles of categories N_1, N_2, N_3, M_1, M_2, M_3 without driver seat, with occupants	Dual mode vehicles: vehicles with a driver seat designed and constructed to be driven by the driver in the 'manual driving mode' and to be driven by the automated driving system (ADS) without any driver supervision in the 'fully automated driving mode'	Specific provisions to be applied if letter A is used (i.e. the approval is not possible under the regulatory act because it does not yet include specific requirements for fully automated vehicles) No provision shall apply if the vehicle category is not in the scope of the base regulatory act.
						2. The manufacturer of the vehicle or Electric/electronic subassembly (ESA) shall fill in the information according to UN Regulation 10, Annex 2A or 2B. The EMC lab shall make this available as an annex to the test report. 3. In case if a remote intervention is used and could influence the behaviour of the vehicle the remote intervention should be part of the EMC test plan. 4. When it's needed during the initial test, to install Ferrite blocks or aluminium foil on several elements to pass the EMC tests, it proves that the EMC design was weak and potentially prone to variation. Therefore the initial tests can never be used for further revision or extension for further vehicles or adding/changing ESAs (Electronic Sub-Assemblies) to the vehicle/DUTs.
D3	Protection against unauthorised use, immobiliser and alarm systems	Regulation (EU) 2019/2144	X	X	X	
D4	Protection of vehicle against cyberattacks	Regulation (EU) 2019/2144	X	X	X	

▼M4

Item	Subject	Regulatory act(the scope of the regulatory act remains unchanged)	Fully automated vehicles of categories N_1, N_2 and N_3 without driver seat and without occupants	Fully automated vehicles of categories N_1, N_2, N_3, M_1, M_2, M_3 without driver seat, with occupants	Dual mode vehicles: vehicles with a driver seat designed and constructed to be driven by the driver in the 'manual driving mode' and to be driven by the automated driving system (ADS) without any driver supervision in the 'fully automated driving mode'	Specific provisions to be applied if letter A is used (i.e. the approval is not possible under the regulatory act because it does not yet include specific requirements for fully automated vehicles) No provision shall apply if the vehicle category is not in the scope of the base regulatory act.
D5	Speedometer	Regulation (EU) 2019/2144	A	A	X (for manual driving mode) A (for fully automated driving mode)	Requirements are not applicable except that the speed signal shall be send to the ADS
D6	Odometer	Regulation (EU) 2019/2144	A	A	X (for manual driving mode) A (for fully automated driving mode)	The odometer signal shall be send to the ADS
D7	Speed limitation devices	Regulation (EU) 2019/2144	A	A	X (for manual driving mode A for fully automated) driving mode	Test mode needed. The speed management and limitation shall be ensured by ADS.
D8	Intelligent speed assistance	Regulation (EU) 2019/2144	n/a	n/a	X (for manual driving mode) n/a (for fully automated driving mode) (functionality covered by the ADS)	
D9	Identification of controls, tell-tales and indicators	Regulation (EU) 2019/2144	n/a	n/a	X (for manual driving mode) n/a (for fully automated driving mode)	

▼M4

Item	Subject	Regulatory act(the scope of the regulatory act remains unchanged)	Fully automated vehicles of categories N_1, N_2 and N_3 without driver seat and without occupants	Fully automated vehicles of categories N_1, N_2, N_3, M_1, M_2, M_3 without driver seat, with occupants	Dual mode vehicles: vehicles with a driver seat designed and constructed to be driven by the driver in the 'manual driving mode' and to be driven by the automated driving system (ADS) without any driver supervision in the 'fully automated driving mode'	Specific provisions to be applied if letter A is used (i.e. the approval is not possible under the regulatory act because it does not yet include specific requirements for fully automated vehicles) No provision shall apply if the vehicle category is not in the scope of the base regulatory act.
D10	Heating systems	Regulation (EU) 2019/2144	n/a	A	X (for manual driving mode) A (for fully automated driving mode)	In the case of part or parts of the heating system in the passenger compartment, and in the case of overheating, the temperature of the parts shall not exceed 110 °C (70 ° C for M_2 and 80 °C for M_3). The activation and adjustment of the heating system can be managed by the ADS and/or passengers or remote intervention operator (if applicable).
D11	Light signalling devices	Regulation (EU) 2019/2144	X	X	X	
D12	Road illumination devices	Regulation (EU) 2019/2144	X	X	X	
D13	Retro-reflective devices	Regulation (EU) 2019/2144	X	X	X	
D14	Light sources	Regulation (EU) 2019/2144	X	X	X	
D15	Installation of light signalling, road illumination and retro-reflective devices	Regulation (EU) 2019/2144	A	A	X (for manual driving mode) A (for fully automated driving mode)	The requirements shall remain the same, but in case of malfunctioning, the information shall be sent to ADS and the remote intervention operator (if applicable). The activation of the lights is managed by the ADS. For bidirectional vehicles, requirements shall be met in both directions unless it is incompatible with the use in agreement with the type-approval authority.

▼M4

Item	Subject	Regulatory act(the scope of the regulatory act remains unchanged)	Fully automated vehicles of categories N_1, N_2 and N_3 without driver seat and without occupants	Fully automated vehicles of categories N_1, N_2, N_3, M_1, M_2, M_3 without driver seat, with occupants	Dual mode vehicles: vehicles with a driver seat designed and constructed to be driven by the driver in the 'manual driving mode' and to be driven by the automated driving system (ADS) without any driver supervision in the 'fully automated driving mode'	Specific provisions to be applied if letter A is used (i.e. the approval is not possible under the regulatory act because it does not yet include specific requirements for fully automated vehicles) No provision shall apply if the vehicle category is not in the scope of the base regulatory act.
D16	Emergency stop signal	Regulation (EU) 2019/2144	X	X	X	
D17	Headlamp cleaners (IF)	Regulation (EU) 2019/2144	A	A	X (for manual driving mode) A (for fully automated driving mode)	The control of the headlamp cleaner shall be managed by the ADS.
D18	Gear shift indicator	Regulation (EU) 2019/2144	n/a	n/a	X (for manual driving mode) n/a (for fully automated mode)	not in scope
E	DRIVER AND SYSTEM BEHAVIOUR					
E1	Alcohol interlock installation facilitation	Regulation (EU) 2019/2144	n/a	n/a	X (for manual driving mode) n/a (for fully automated driving mode)	
E2	Driver drowsiness and attention warning	Regulation (EU) 2019/2144	n/a	n/a	X (for manual driving mode) n/a (for fully automated driving mode)	

▼M4

Item	Subject	Regulatory act(the scope of the regulatory act remains unchanged)	Fully automated vehicles of categories N_1, N_2 and N_3 without driver seat and without occupants	Fully automated vehicles of categories N_1, N_2, N_3, M_1, M_2, M_3 without driver seat, with occupants	Dual mode vehicles: vehicles with a driver seat designed and constructed to be driven by the driver in the 'manual driving mode' and to be driven by the automated driving system (ADS) without any driver supervision in the 'fully automated driving mode'	Specific provisions to be applied if letter A is used (i.e. the approval is not possible under the regulatory act because it does not yet include specific requirements for fully automated vehicles) No provision shall apply if the vehicle category is not in the scope of the base regulatory act.
▼M8						
E3	Advanced driver distraction warning	Regulation (EU) 2019/2144	n/a	n/a	X (for manual driving mode) n/a (for fully automated driving mode)	
▼M4						
E4	Driver availability monitoring system (in case of automated vehicles)	Regulation (EU) 2019/2144	n/a	n/a	X	
E5	Event data recorder	Regulation (EU) 2019/2144	A	A	A for fully automated driving mode X for manual driving mode	Specific ADS data elements are covered in ►C2 Implementing Regulation (EU) 2022/1426 ◄
E6	Systems to replace driver's control (in case of automated vehicles)	Regulation (EU) 2019/2144	X	X	X	Covered by ►C2 Implementing Regulation (EU) 2022/1426 ◄
E7	Systems to provide the vehicle with information on state of vehicle and surrounding area (in case of automated vehicles)	Regulation (EU) 2019/2144	X	X	X	Covered by ►C2 Implementing Regulation (EU) 2022/1426 ◄

▼M4

Item	Subject	Regulatory act(the scope of the regulatory act remains unchanged)	Fully automated vehicles of categories N_1, N_2 and N_3 without driver seat and without occupants	Fully automated vehicles of categories N_1, N_2, N_3, M_1, M_2, M_3 without driver seat, with occupants	Dual mode vehicles: vehicles with a driver seat designed and constructed to be driven by the driver in the 'manual driving mode' and to be driven by the automated driving system (ADS) without any driver supervision in the 'fully automated driving mode'	Specific provisions to be applied if letter A is used (i.e. the approval is not possible under the regulatory act because it does not yet include specific requirements for fully automated vehicles) No provision shall apply if the vehicle category is not in the scope of the base regulatory act.
E8	Platooning (IF)	Regulation (EU) 2019/2144	No requirement yet	No requirement yet	No requirement yet	No requirement yet
E9	Systems to provide safety information to other road users (in case of automated vehicles)	Regulation (EU) 2019/2144	X	X	X	Covered by ►C2 Implementing Regulation (EU) 2022/1426 ◄
F	GENERAL VEHICLE CONSTRUCTION AND FEATURES					
F1	Registration plate space	Regulation (EU) 2019/2144	A	A	X (for manual driving mode) A (for fully automated driving mode)	For bidirectional vehicles, requirements shall be met in both directions unless it is incompatible with the use in agreement with the type-approval authority.
F2	Reversing motion	Regulation (EU) 2019/2144	A	A	X (for manual driving mode) A (for fully automated driving mode)	The ADS shall also be tested for manouvrability (reverse gear). The ADS shall take care of the tasks assigned to the driver (e.g. activation of the reverse gear).

▼M4

Item	Subject	Regulatory act(the scope of the regulatory act remains unchanged)	Fully automated vehicles of categories N_1, N_2 and N_3 without driver seat and without occupants	Fully automated vehicles of categories N_1, N_2, N_3, M_1, M_2, M_3 without driver seat, with occupants	Dual mode vehicles: vehicles with a driver seat designed and constructed to be driven by the driver in the 'manual driving mode' and to be driven by the automated driving system (ADS) without any driver supervision in the 'fully automated driving mode'	Specific provisions to be applied if letter A is used (i.e. the approval is not possible under the regulatory act because it does not yet include specific requirements for fully automated vehicles) No provision shall apply if the vehicle category is not in the scope of the base regulatory act.
F3	Door latches and hinges	Regulation (EU) 2019/2144	n/a	A	X (for manual driving mode) A (for fully automated driving mode)	The visual signal of the door closure warning system shall be replaced by a signal transmitted to the ADS and the remote intervention operator (if applicable). The equipment of side doors with locking devices shall be subject to the discretion of the manufacturer. The primary door controls which normally would be accessible by the driver, would need to be accessible either from a primary seating position (if applicable) or adjacent to each door. The ADS shall ensure that the vehicle can only move if doors are closed.
F4	Door entry steps, handholds and running boards	Regulation (EU) 2019/2144	A	X	X	Vehicle access requirements do not apply where there is no vehicle cab.
F5	External projections	Regulation (EU) 2019/2144	not in scope	A	A (for fully automated driving mode)	Sensors fitted to the ADS vehicle which are necessary to perform the Dynamic Driving Task can be excluded in a similar manner as camera monitor systems devices if they meet the general requirements on camera monitor devices in paragraph 6.2.2.1 of UN Regulation 46. The 'R' point of the driver referred shall be considered to be the 'R' point of the foremost passenger in case there is no driver seat.

▼M4

Item	Subject	Regulatory act(the scope of the regulatory act remains unchanged)	Fully automated vehicles of categories N_1, N_2 and N_3 without driver seat and without occupants	Fully automated vehicles of categories N_1, N_2, N_3, M_1, M_2, M_3 without driver seat, with occupants	Dual mode vehicles: vehicles with a driver seat designed and constructed to be driven by the driver in the 'manual driving mode' and to be driven by the automated driving system (ADS) without any driver supervision in the 'fully automated driving mode'	Specific provisions to be applied if letter A is used (i.e. the approval is not possible under the regulatory act because it does not yet include specific requirements for fully automated vehicles) No provision shall apply if the vehicle category is not in the scope of the base regulatory act.
						For bidirectional vehicles, requirements shall be met in both directions. Alternative requirements leading to an equivalent level of safety to the satisfaction of the type-approval authority are permitted if meeting all the requirements in both directions is incompatible with the bidirectional use.
F6	External projections of commercial vehicle cabs	Regulation (EU) 2019/2144	A	A	A	Sensors fitted to the ADS vehicle which are necessary to perform the Dynamic Driving Task can be excluded in a similar manner as camera monitor systems devices if they meet the general requirements on camera monitor devices in paragraph 6.2.2.1 of UN Regulation 46. The 'R' point of the driver referred shall be considered to be the 'R' point of the foremost passenger in case there is no driver seat. For bidirectional vehicles, requirements shall be met in both directions. Alternative requirements leading to an equivalent level of safety to the satisfaction of the type-approval authority are permitted if meeting all the requirements in both directions is incompatible with the bidirectional use.
F7	Statutory plate and vehicle identification number	Regulation (EU) 2019/2144	X A for bidirectional vehicles	X A for bidirectional vehicles	X	For bidirectional vehicles, requirements shall be met in both directions. Alternative requirements leading to an equivalent level of safety to the satisfaction of the type-approval authority are permitted if meeting all the requirements in both directions is incompatible with the bidirectional use.

▼M4

Item	Subject	Regulatory act(the scope of the regulatory act remains unchanged)	Fully automated vehicles of categories N_1, N_2 and N_3 without driver seat and without occupants	Fully automated vehicles of categories N_1, N_2, N_3, M_1, M_2, M_3 without driver seat, with occupants	Dual mode vehicles: vehicles with a driver seat designed and constructed to be driven by the driver in the 'manual driving mode' and to be driven by the automated driving system (ADS) without any driver supervision in the 'fully automated driving mode'	Specific provisions to be applied if letter A is used (i.e. the approval is not possible under the regulatory act because it does not yet include specific requirements for fully automated vehicles) No provision shall apply if the vehicle category is not in the scope of the base regulatory act.
F8	Towing devices	Regulation (EU) 2019/2144	X	X	X	
F9	Wheel guards	Regulation (EU) 2019/2144	Not in scope	A	X (for manual driving mode) A (for fully automated mode)	Fully applicable. For bidirectional vehicles, requirements shall be met in both directions. Alternative requirements leading to an equivalent level of safety to the satisfaction of the type-approval authority are permitted if meeting all the requirements in both directions is incompatible with the bidirectional use.
F10	Spray suppression systems	Regulation (EU) 2019/2144	X	X	X	
F11	Masses and dimensions	Regulation (EU) 2019/2144	A	A.	A (for fully automated mode) X (for manual driving mode)	Mass in running order shall exclude mass of the driver if there is no on-board operator. The ADS sensors above 2 metres are not included in the maximum dimensions in accordance with the provisions of Regulation (EU) 2021/535, Annex XIII.
F12	Mechanical couplings	Regulation (EU) 2019/2144	A	A	X (for manual driving mode) A (for fully automated driving mode)	The indication to driver that the mechanical coupling is locked/unlocked shall be addressed to the ADS and the remote intervention operator (if applicable).

▼M4

Item	Subject	Regulatory act(the scope of the regulatory act remains unchanged)	Fully automated vehicles of categories N_1, N_2 and N_3 without driver seat and without occupants	Fully automated vehicles of categories N_1, N_2, N_3, M_1, M_2, M_3 without driver seat, with occupants	Dual mode vehicles: vehicles with a driver seat designed and constructed to be driven by the driver in the 'manual driving mode' and to be driven by the automated driving system (ADS) without any driver supervision in the 'fully automated driving mode'	Specific provisions to be applied if letter A is used (i.e. the approval is not possible under the regulatory act because it does not yet include specific requirements for fully automated vehicles) No provision shall apply if the vehicle category is not in the scope of the base regulatory act.
F13	Vehicles intended for the transportation of dangerous goods (IF)	Regulation (EU) 2019/2144	Not in scope	Not in scope	Not in scope	Fully automated vehicles intended for the transportation of dangerous goods cannot be approved.
F14	General bus construction	Regulation (EU) 2019/2144	Not in scope	A	X (for manual driving mode) A (for fully automated mode)	Buses without a roof and trolley buses are out of scope. In general the tasks normally expected by the driver under UN Regulation No 107 shall be covered in the ADS safety concept. The requirements of paragraphs 7.2.2.1.1, 7.2.2.1.2 and 7.2.2.1.3 as defined in Annex 3 to UN-Regulation No 107 shall not apply. All required information normally displayed or noticed to the driver or information to passengers in case of an emergency shall be transferred to the ADS, the on-board operator and the remote intervention operator (e.g. fire suppression system) The ADS shall take care of power operated doors. The ADS shall take care of the reaction to fire as part of the ADS safety concept (e.g. emergency manoeuvre and transfer to the safe state), doors automatically unlocked when safe to do so.

▼M4

Item	Subject	Regulatory act(the scope of the regulatory act remains unchanged)	Fully automated vehicles of categories N_1, N_2 and N_3 without driver seat and without occupants	Fully automated vehicles of categories N_1, N_2, N_3, M_1, M_2, M_3 without driver seat, with occupants	Dual mode vehicles: vehicles with a driver seat designed and constructed to be driven by the driver in the 'manual driving mode' and to be driven by the automated driving system (ADS) without any driver supervision in the 'fully automated driving mode'	Specific provisions to be applied if letter A is used (i.e. the approval is not possible under the regulatory act because it does not yet include specific requirements for fully automated vehicles) No provision shall apply if the vehicle category is not in the scope of the base regulatory act.
						In case of emergency, the ADS shall take care of the emergency lighting system as part of the ADS safety concept. Once activated, the emergency lighting system shall remain active for at least 30 minutes. This active function shall be displayed as well to the remote intervention operator who may deactivate the emergency lighting system. The kneeling system shall in ADS operation automatically be actuated to achieve required step height. Also prevention system shall be part of the ADS safety concept to prevent the feet/legs of passengers boarding the vehicle from geting stuck underneath the vehicle during lowering process.
F15	Bus strength of superstructure	Regulation (EU) 2019/2144	Not in scope	X	X	
F16	Flammability in buses	Regulation (EU) 2019/2144	Not in scope	X	X	
G	ENVIRONMENTAL PERFORMANCE AND EMISSIONS					
G1	Sound level	Regulation (EU) No 540/2014	A	A	X (for manual driving mode) A (for fully automated driving mode)	Test mode necessary. Manufacturer to define how to perform the test in accordance with the technical justification in agreement with technical service. Highest value measured in manual or/and in autonomous mode shall be considered for type approval.

▼M4

Item	Subject	Regulatory act(the scope of the regulatory act remains unchanged)	Fully automated vehicles of categories N_1, N_2 and N_3 without driver seat and without occupants	Fully automated vehicles of categories N_1, N_2, N_3, M_1, M_2, M_3 without driver seat, with occupants	Dual mode vehicles: vehicles with a driver seat designed and constructed to be driven by the driver in the 'manual driving mode' and to be driven by the automated driving system (ADS) without any driver supervision in the 'fully automated driving mode'	Specific provisions to be applied if letter A is used (i.e. the approval is not possible under the regulatory act because it does not yet include specific requirements for fully automated vehicles) No provision shall apply if the vehicle category is not in the scope of the base regulatory act.
						Vehicles having overall sound levels complying with the requirements in paragraph 6.2.8 of UNECE Regulation No 138(1) with a margin of +3 dB(A), are not required to be equipped with Acoustic Vehicle Alerting System (AVAS). The requirements laid down in paragraph 6.2.8 of that Regulation for one-third octave bands and the requirements laid down in paragraph 6.2.3 of that Regulation for the frequency shift as defined in paragraph 2.4 of that Regulation ('frequency shift') shall not apply to those vehicles to determine the need for AVAS independent whether the vehicles is driven in manual or autonomous mode during the test. The R point of the driver seat shall be considered to be the lowest R point of the passenger seats in the 1st seat row. Used test procedure/special arrangement to be recorded in the test report.
G2	Tailpipe emissions of vehicle in lab	Regulation (EC) No 715/2007	A	A	X (for manual driving mode) A (for fully automated driving mode)	The manufacturer shall define a test mode in order to allow testing on a chassis dynamometer and communicate the method to the relevant approval authorities. The required driver warning and inducement system shall be replaced by signals transmitted to the automated driving system, and remote intervention operator (if applicable). It shall be clearly indicated to the remote intervention operator when the inducement will be activated.

▼M4

Item	Subject	Regulatory act(the scope of the regulatory act remains unchanged)	Fully automated vehicles of categories N_1, N_2 and N_3 without driver seat and without occupants	Fully automated vehicles of categories N_1, N_2, N_3, M_1, M_2, M_3 without driver seat, with occupants	Dual mode vehicles: vehicles with a driver seat designed and constructed to be driven by the driver in the 'manual driving mode' and to be driven by the automated driving system (ADS) without any driver supervision in the 'fully automated driving mode'	Specific provisions to be applied if letter A is used (i.e. the approval is not possible under the regulatory act because it does not yet include specific requirements for fully automated vehicles) No provision shall apply if the vehicle category is not in the scope of the base regulatory act.
G2a	Determination of specific CO_2 emissions and fuel consumption of vehicle and device for monitoring on board the vehicle the consumption of fuel and/or electric energy	Regulation (EC) No 715/2007	A	A	X (for manual driving mode) A (for fully automated driving mode)	The manufacturer shall define a test mode in order to allow testing on a chassis dynamometer and communicate the method to the relevant approval authorities.
G3	Tailpipe emissions of engine in lab	Regulation (EC) No 595/2009	A	A	X (for manual driving mode) A (for automated driving mode)	The required driver warning and inducement system shall be replaced by signals transmitted to the automated driving system and remote intervention operator (if applicale). It shall be clearly indicated to the remote intervention operator when the inducement will be activated.
G3a	Determination of specific CO_2 emissions and fuel consumption of vehicle	Regulation (EC) No 595/2009	A	A	X (for manual driving mode) A (for automated driving mode)	The manufacturer shall define a test mode in order to perform the verification testing procedure and communicate the method to the relevant approval authorities.
G3b	Determination of specific energy efficiency performance of trailer	Regulation (EC) No 595/2009	Not in scope	Not in scope	Not in scope	Not in scope

▼M4

Item	Subject	Regulatory act(the scope of the regulatory act remains unchanged)	Fully automated vehicles of categories N_1, N_2 and N_3 without driver seat and without occupants	Fully automated vehicles of categories N_1, N_2, N_3, M_1, M_2, M_3 without driver seat, with occupants	Dual mode vehicles: vehicles with a driver seat designed and constructed to be driven by the driver in the 'manual driving mode' and to be driven by the automated driving system (ADS) without any driver supervision in the 'fully automated driving mode'	Specific provisions to be applied if letter A is used (i.e. the approval is not possible under the regulatory act because it does not yet include specific requirements for fully automated vehicles) No provision shall apply if the vehicle category is not in the scope of the base regulatory act.
G4	Tailipipe emissions on the road	Regulation (EC) No 715/2007 Regulation (EC) No 595/2009	A	A	X (for manual driving mode) A (for automated driving mode)	The manufacturer shall define a test mode in order to allow testing on the road and communicate the method to the relevant approval authorities. The required driver warning and inducement system shall be replaced by signals transmitted to the automated driving system, and remote intervention operator (if applicable). It shall be clearly indicated to the remote intervention operator when the inducement will be activated.
G5	Durability of tailpipe emissions	Regulation (EC) No 715/2007 Regulation (EC) No 595/2009	A	A	X (for manual driving mode)	The manufacturer shall define a test mode in order to allow testing on the road and communicate the method to the relevant approval authorities.
G6	Crankcase emissions	Regulation (EC) No 715/2007 Regulation (EC) No 595/2009	X	X	X	
G7	Evaporative emissions	Regulation (EC) No 715/2007	X	X	X	

▼M4

Item	Subject	Regulatory act(the scope of the regulatory act remains unchanged)	Fully automated vehicles of categories N_1, N_2 and N_3 without driver seat and without occupants	Fully automated vehicles of categories N_1, N_2, N_3, M_1, M_2, M_3 without driver seat, with occupants	Dual mode vehicles: vehicles with a driver seat designed and constructed to be driven by the driver in the 'manual driving mode' and to be driven by the automated driving system (ADS) without any driver supervision in the 'fully automated driving mode'	Specific provisions to be applied if letter A is used (i.e. the approval is not possible under the regulatory act because it does not yet include specific requirements for fully automated vehicles) No provision shall apply if the vehicle category is not in the scope of the base regulatory act.
G8	Low-temperature-tailpipe emissions in lab	Regulation (EC) No 715/2007	A	A	X (for manual driving mode) A (for automated driving mode)	The manufacturer shall define a test mode in order to allow testing on a chassis dynamometer and communicate the method to the relevant approval authorities. The required driver warning and inducement system shall be replaced by signals transmitted to the automated driving system and remote intervention operator (if applicale). It shall be clearly indicated to the remote intervention operator when the inducement will be activated.
G9	On-board diagnostics	Regulation (EC) No 715/2007 Regulation (EC) No 595/2009	A	A	X (for manual driving mode) A (for automated driving mode)	The required Malfunction Indicator Light (MIL) shall be replaced by a signal transmitted to the automated driving system, and remote intervention operator (if applicable).
G10	Absence of defeat device	Regulation (EC) No 715/2007 Regulation (EC) No 595/2009	X	X	X	
G11	Auxiliary emissions strategies	Regulation (EC) No 715/2007 Regulation (EC) No 595/2009	X	X	X	

▼M4

Item	Subject	Regulatory act(the scope of the regulatory act remains unchanged)	Fully automated vehicles of categories N_1, N_2 and N_3 without driver seat and without occupants	Fully automated vehicles of categories N_1, N_2, N_3, M_1, M_2, M_3 without driver seat, with occupants	Dual mode vehicles: vehicles with a driver seat designed and constructed to be driven by the driver in the 'manual driving mode' and to be driven by the automated driving system (ADS) without any driver supervision in the 'fully automated driving mode'	Specific provisions to be applied if letter A is used (i.e. the approval is not possible under the regulatory act because it does not yet include specific requirements for fully automated vehicles) No provision shall apply if the vehicle category is not in the scope of the base regulatory act.
G12	Anti-tampering	Regulation (EC) No 715/2007 Regulation (EC) No 595/2009	X	X	X	
G13	Recyclability	Directive 2005/64/EC	X	X	X	
G14	Air-conditioning systems	Directive 2006/40/EC	n/a	X	X	
H	ACCESS TO VEHICLE INFORMATION AND SOFTWARE UPDATE					
H1	Access to vehicle OBD information and vehicle repair and maintenance information	Regulation (EU) 2018/858, Articles 61 to 66 and Annex X	X	X	X	
H2	Software update	Regulation (EU) 2018/858 UN Regulation No 156	X	X	X	

▼B

Appendix 2

Requirements for EU individual vehicle approval pursuant to Article 44

1. APPLICATION

For the purpose of application of this Appendix, a vehicle is deemed to be new where:

(a) it has never been registered previously; or

(b) it has been registered for less than six months at the time of the application for individual vehicle approval.

A vehicle shall be considered registered where it has obtained a permanent, temporary or short-term administrative authorisation for entry into service in road traffic, involving its identification and the issuing of a registration number ([1]).

([1]) In the absence of a registration document, the competent authority may refer to available documented evidence of date of manufacture or documented evidence of first purchase.

2. ADMINISTRATIVE PROVISIONS

2.1. Categorisation of the vehicle

Vehicles shall be categorised in accordance with the criteria set out in Annex I as follows:

(a) the actual number of seating positions shall be taken into consideration; and

(b) the technically maximum permissible laden mass shall be the maximum mass stated by the manufacturer in the country of origin and available in his official documentation.

Where it is not possible to easily determine the vehicle category because of the design of the bodywork, the conditions set out in Annex I shall apply.

2.2. Application for individual vehicle approval

(a) The applicant shall submit an application to the approval authority accompanied by all relevant documentation necessary for the operation of the approval procedure.

Where the submitted documentation is incomplete, falsified or forged the application for approval shall be rejected.

(b) Only one application for a particular vehicle may be submitted in only one Member State. The approval authority may require from the applicant a written commitment that only one application will be submitted in the Member State of the approval authority.

By a particular vehicle, it shall be understood a physical vehicle the VIN of which is clearly identified.

However, any applicant may apply for EU individual vehicle approval in another Member State in respect of another particular vehicle with technical characteristics identical or similar to the one that has been granted an EU individual vehicle approval.

(c) The model of the application form and the layout of the file shall be laid down by the approval authority.

The particulars of the vehicle requested may only consist in an appropriate selection of the information included in Annex I.

(d) The technical requirements to be complied with are those laid down in point 4.

▼B

The technical requirements shall be those applicable to vehicles belonging to a type of vehicle currently in production, in relation to the date of the submission of the application.

(e) With respect to the tests required under the regulatory acts listed in this Annex, the applicant shall supply a statement of compliance with recognised international standards or regulations. The statement in question may only be issued by the vehicle manufacturer.

'Statement of compliance' shall mean a statement issued by the office or department within the manufacturer's organisation that is duly authorised by the management to fully engage the legal responsibility of the manufacturer with respect to the design and the construction of a vehicle.

The regulatory acts for which such a statement has to be supplied shall be those referred to in point 4.

Where a statement of compliance gives rise to uncertainty, the applicant may be required to obtain from the manufacturer a piece of evidence, including a test report, in order to corroborate the manufacturer's statement.

2.3. Technical services entrusted with individual vehicle approvals

(a) The technical services entrusted with individual vehicle approvals shall be of category A as referred to in Article 68(1).

(b) By way of derogation from the requirement to demonstrate their compliance with the standards listed in Appendix 1 to Annex III, technical services shall comply with the following standards:

(i) EN ISO/IEC 17025:2005 when they perform tests themselves;

(ii) EN ISO/IEC 17020:2012 when they check compliance of the vehicle with the requirements included in this Appendix.

(c) Where specific tests requiring specific skills have to be conducted at the request of the applicant, they shall be conducted by one of the technical services notified to the Commission at the choice of the applicant.

2.4. Test reports

(a) Test reports shall be drafted in accordance with paragraph 5.10.2 of standard EN ISO/IEC 17025:2005.

(b) Test reports shall be drafted in one of the languages of the Union determined by the approval authority.

Where in application of point 2.3(c) a test report has been issued in a Member State other than the one entrusted with the individual vehicle approval, the approval authority may require that the applicant submits a true translation of the test report.

(c) Test reports shall include a description of the vehicle tested, including its identification. The parts that play a significant role with regard to the results of the tests shall be described and their identification number reported.

(d) At the request of an applicant, a test report delivered for a system related to a particular vehicle may be presented repeatedly either by the same or another applicant for the purposes of individual approval of another vehicle.

▼B

In such a case, the approval authority shall ensure that the technical characteristics of the vehicle are properly inspected against the test report.

Inspection of the vehicle and the documentation accompanying the test report shall demonstrate that the vehicle for which an individual approval is sought has the same characteristics as the vehicle described in the report.

(e) Only authenticated copies of a test report may be submitted.

(f) Test reports referred to in point (d) do not include the reports drawn up in order to grant the individual vehicle approval.

2.5. In the individual vehicle approval procedure each particular vehicle shall be inspected physically by the technical service.

No exemption to this principle shall be permitted.

2.6. Where the approval authority is satisfied that the vehicle meets the technical requirements specified in this Appendix and conforms to the description included in the application, it shall grant approval in accordance with Article 44.

2.7. The certificate of approval shall be drafted in accordance with Article 44.

2.8. The approval authority shall keep record of all approvals granted under Article 44.

3. REVIEW OF THE TECHNICAL REQUIREMENTS

The list of the technical requirements included in point 4 shall be regularly reviewed in order to take account of the results of the harmonisation work in progress at the World Forum for Harmonization of Vehicle Regulations (WP.29) in Geneva and legislative developments in the third countries.

4. TECHNICAL REQUIREMENTS

Part I: Vehicles belonging to category M_1

Item	Regulatory act reference	Alternative requirements
1	Council Directive 70/157/EEC ([1]) (Permissible sound level)	Drive-by test (a) A test shall be conducted in accordance with the 'Method A' referred to in Annex 3 to UN Regulation No 51. Limits are those specified in point 2.1 of Annex I to Directive 70/157/EEC. 1 decibel in addition to the permitted limits shall be allowed. (b) The test track shall comply with Annex 8 to UN Regulation No 51. A test track having different specifications may be used under the condition that correlation tests have been conducted by the technical service. A correction factor shall be applied if necessary. (c) Exhaust systems containing fibrous materials need not be conditioned as prescribed in Annex 5 to UN Regulation No 51. Stationary test A test shall be conducted in accordance with paragraph 3.2 of Annex 3 to UN Regulation No 51.

▼B

Item	Regulatory act reference	Alternative requirements
2A	Regulation (EC) No 715/2007 (Emissions (Euro 5 and Euro 6) light duty vehicles/access to information)	Tailpipe emissions (a) A type I test shall be conducted in accordance with Annex III to Regulation (EC) No 692/2008 using the deterioration factors set out in point 1.4 of Annex VII to Regulation (EC) No 692/2008. The limits to be applied shall be those specified in Table I and Table II in Annex I to Regulation (EC) No 715/2007. (b) The vehicle shall not be required to exhibit 3 000 km as mentioned in paragraph 3.1.1 of Annex 4 to UN Regulation No 83. (c) The fuel to be used for the test shall be the reference fuel as prescribed in Annex IX to Regulation (EC) No 692/2008. (d) The dynamometer shall be set up in accordance with the technical requirements set out in paragraph 3.2 of Annex 4 to UN Regulation No 83. (e) The test referred to in point (a) shall not be conducted where it can be shown that the vehicle complies with the California Code Regulations referred to in point 2.1.1 of Annex I to Regulation (EC) No 692/2008. Evaporative emissions For petrol-fuelled engines, the presence of an evaporate emissions control system shall be required (e.g. a charcoal canister). Crankcase emissions The presence of a device for recycling crankcase gases shall be required. OBD (a) The vehicle shall be fitted with an OBD system. (b) OBD-interface must be able to communicate with common diagnostic tools used for periodic technical inspections. Smoke opacity (a) Vehicles equipped with a diesel-fuelled engine shall be tested in accordance with the tests methods referred to in Appendix 2 to Annex IV to Regulation (EC) No 692/2008. (b) The corrected value of the absorption coefficient shall be affixed conspicuously and in a readily accessible place. CO_2 emissions and fuel consumption (a) A test shall be conducted in accordance with Annex XII to Regulation (EC) No 692/2008.

▼B

Item	Regulatory act reference	Alternative requirements
		(b) The vehicle shall not be required to exhibit 3 000 km as requested in paragraph 3.1.1 of Annex 4 to UN Regulation No 83. (c) Where the vehicle complies with the California Code Regulations referred to in point 2.1.1 of Annex I to Regulation (EC) No 692/2008 and therefore no test of tailpipe emissions is required to be performed, Member States shall calculate CO_2 emissions and fuel consumption with the formula laid down in the explanatory notes ([b]) and ([c]). Access to information The provisions regarding access to information shall not apply. Power measurement (a) The applicant shall submit a statement from the manufacturer stating the maximum engine power output in kW as well as the corresponding engine speed in revolutions per minute. (b) An engine power output curve providing the same information may alternatively be provided by the applicant.
3A	UN Regulation No 34 (Fuel tanks — Rear protective devices)	Fuel tanks (a) Fuel tanks shall comply with paragraph 5 of UN Regulation No 34 with the exception of paragraphs 5.1, 5.2 and 5.12. In particular, they shall comply with paragraphs 5.9 and 5.9.1 but no dripping test shall be conducted. (b) LPG or CNG tanks shall be type-approved in accordance with UN Regulation No 67, series of amendments 01, or UN Regulation No 110 ([a]), respectively. Specific provisions for fuel tanks made of a plastic material The applicant shall submit a statement from the manufacturer establishing that the fuel tank on the particular vehicle, the VIN of which has to be specified, complies either with at least one of the following: — FMVSS No 301 (Fuel system integrity); or — Annex 5 to UN Regulation 34. Rear protective device The rear part of the vehicle shall be constructed in accordance with paragraphs 8 and 9 of UN Regulation No 34.
3B	UN Regulation No 58 (Rear underrun protection)	The rear part of the vehicle shall be constructed in accordance with paragraph 2 UN Regulation No 58. It is sufficient that the requirements set out in paragraph 2.3 are fulfilled.
4A	Regulation (EU) No 1003/2010 (Rear registration plate space)	Space, inclination, angles for visibility and position of the registration plate shall comply with Regulation (EU) No 1003/2010.

▼B

Item	Regulatory act reference	Alternative requirements
5A	UN Regulation No 79 (Steering equipment)	Mechanical systems (a) The steering mechanism shall be built as to self-centre. In order to check compliance with this provision, a test shall be conducted in accordance with paragraphs 6.1.2 and 6.2.1 of UN Regulation No 79. (b) The failure of the power steering equipment shall not lead to a complete loss of control of the vehicle. Complex electronic vehicle control system (‘Drive-by wire’ devices) Complex electronic control system shall be permitted only if they comply with Annex 6 to UN Regulation No 79.
6A	UN Regulation No 11 (Door latches and hinges)	Compliance with paragraph 6.1.5.4 of UN Regulation No 11.
7A	UN Regulation No 28 (Audible warning)	Components The audible warning devices are not required to be type-approved in accordance with UN Regulation No 28. However, they shall emit a continuous sound as required in paragraph 6.1.1 of UN Regulation No 28. Installation on vehicle (a) A test shall be conducted in accordance with paragraph 6.2 of UN Regulation No 28. (b) The maximum sound pressure level shall be in accordance with paragraph 6.2.7.
8A	UN Regulation No 46 (Indirect vision devices)	Components (a) The vehicle shall be fitted with the rear-view mirrors prescribed in paragraph 15.2 of UN Regulation No 46. (b) They are not required to be type-approved in accordance with UN Regulation No 46. (c) The radii of curvature of the mirrors shall not cause significant image distortions. At the discretion of the technical service, the radii of curvature shall be checked in accordance with the method described in Annex 7 to UN Regulation No 46. The radii of curvature shall not be less than those required by paragraph 6.1.2.2.4 of UN Regulation No 46. Installation on vehicle Measurement shall be conducted in order to ensure that the fields of vision comply with paragraph 15.2.4. of UN Regulation No 46.

▼B

Item	Regulatory act reference	Alternative requirements
9B	UN Regulation No 13-H (Braking)	General provisions (a) The braking system shall be built in accordance with paragraph 5 of UN Regulation No 13-H. (b) Vehicles shall be fitted with an electronic antilock braking system acting on all wheels. (c) The performances of the braking system shall comply with Annex III to UN Regulation No 13-H. (d) For those purposes, road tests shall be conducted on a track the surface of which possesses high adhesion. The test on the parking brake shall be conducted on a 18 % gradient (up and down). Only those tests mentioned under the headings 'Service brake' and 'Parking brake' below shall be conducted. In each case, the vehicle shall be in fully laden conditions. (e) The road test referred to in point (d) shall not be conducted where the applicant can submit a statement from the manufacturer establishing that the vehicle complies either with UN Regulation No 13-H, including supplement 5, or with FMVSS No 135. Service brake (a) A 'Type 0' test as prescribed in paragraphs 1.4.2 and 1.4.3 of Annex 3 to UN Regulation No 13-H shall be conducted. (b) In addition, a 'Type I' test as prescribed in paragraph 1.5 of Annex 3 to UN Regulation No 13-H shall be conducted. Parking brake A test shall be conducted in accordance with paragraph 2.3 of Annex 3 to UN Regulation No 13-H.
10A	UN Regulation No 10 (Radio interference (electromagnetic compatibility))	Components (a) Electrical/electronic sub-assemblies are not required to be type-approved in accordance with UN Regulation No 10. (b) However, electric/electronic devices retrofitted shall comply with UN Regulation No 10. Emitted electromagnetic radiations The applicant shall submit a statement from the manufacturer establishing that the vehicle complies with UN Regulation No 10 or with the following alternative standards: — Broadband electromagnetic radiation: CISPR 12 or SAE J551-2; or

▼B

Item	Regulatory act reference	Alternative requirements
		— Narrowband electromagnetic radiation: CISPR 12 (off-board) or 25 (in-board) or SAE J551-4 and SAE J1113-41. Immunity tests Immunity test shall be waived.
12A	UN Regulation No 21 (Interior fittings)	Interior arrangement (a) With respect to the requirements on energy absorption, the vehicle shall be deemed to comply with UN Regulation No 21 if the vehicle is fitted with at least two front airbags, one inserted into the steering wheel and the other into the dashboard. (b) Where the vehicle is fitted with only one front air bag inserted in the steering wheel, the dashboard shall be made up of energy absorbing materials. (c) The technical service shall check that there are no sharp edges in the zones defined in paragraphs 5.1 to 5.7 of UN Regulation No 21. Electrical controls (a) Power-operated windows, roof-panel systems and partitioning systems shall be tested in accordance with paragraph 5.8 of UN Regulation No 21. The sensitivity of auto-reverse systems referred to in paragraph 5.8.3 may diverge from the requirements set out in paragraph 5.8.3.1.1 of UN Regulation No 21. (b) Electric windows which cannot be closed when the ignition is off shall be exempt from the requirements concerning auto-reverse systems.
13A	UN Regulation No 18 (Anti-theft and immobiliser)	(a) In order to prevent unauthorised use, the vehicle shall be fitted with: — a locking device as defined in paragraph 2.3 of UN Regulation No 18; and — an immobiliser which meets the technical requirements of paragraph 5 of UN Regulation No 18; (b) If, in accordance with point (a), an immobiliser has to be retrofitted, it shall be of an approved type in accordance with UN Regulations No 18, No 97, or No 116.
14A	UN Regulation No 12 (Protective steering)	(a) The applicant shall submit a statement from the manufacturer establishing that the particular vehicle, the VIN of which has to be specified, complies with at least one of the following: — UN Regulation No 12; — FMVSS No 203 (Impact protection for the driver from the steering control system) including FMVSS No 204 (Steering control rearward displacement); — Article 11 of JSRRV.

▼B

Item	Regulatory act reference	Alternative requirements
		(b) A test in accordance with Annex 3 to UN Regulation No 12 may be conducted on a production vehicle at the request of the applicant. The test shall be conducted by a technical service that has been designated for carrying out this test. A detailed report shall be issued by that technical service to the applicant.
15A	UN Regulation No 17 (Seat strength — head restraints)	Seats, seat anchorages and adjustment systems The applicant shall submit a statement from the manufacturer establishing that the particular vehicle, the VIN of which has to be specified, complies with at least one of the following: — UN Regulation No 17; or — FMVSS No 207 (Seating systems). Head restraints (a) Where the statement is based on FMVSS No 207, the head restraints shall fulfil, in addition, the requirements of paragraph 5 and Annex 4 to UN Regulation No 17. (b) Only the tests described in paragraphs 5.12, 6.5, 6.6 and 6.7 of UN Regulation No 17 shall be conducted. (c) In the other event, the applicant shall submit a statement from the manufacturer establishing that the particular vehicle, the VIN of which has to be specified, complies with FMVSS No 202a (Head restraints).
▼M3 16A	UN Regulation No 26 (Exterior projections)	(a) The external surface of the bodywork shall comply with the general requirements included in paragraph 5 of UN Regulation No 26. (b) At the discretion of the technical service the provisions referred to in paragraphs 6.1, 6.5, 6.6, 6.7, 6.8 and 6.11 of UN Regulation No 26 shall be checked.
▼B 17A, 17B	UN Regulation No 39 (Speedometer — reverse gear)	Speedometer equipment (a) The dial shall comply with paragraphs 5.1 to 5.1.4 of UN Regulation No 39. (b) Where the technical service wants to verify that the speedometer is calibrated with sufficient accuracy, it may require the tests prescribed in paragraph 5.2 of UN Regulation No 39 to be conducted. Reverse gear The gear mechanism shall include a reverse gear.
18A	Regulation (EU) No 19/2011 (Statutory plates)	VIN (a) The vehicle shall be fitted with a VIN comprising a minimum of 8 and a maximum of 17 characters. VIN comprising 17 characters shall fulfil the requirements set out in international standards ISO 3779:1983 and 3780:1983.

▼B

Item	Regulatory act reference	Alternative requirements
		(b) VIN shall be located in a clearly visible and accessible position in such a way as it cannot be obliterated or deteriorate. (c) Where no VIN is stamped in the chassis or in the body, a Member State may require the applicant that the VIN is retrofitted in application of its national law. In such a case, the competent authority of that Member State shall supervise the operation. Statutory plate The vehicle shall be fitted with an identification plate affixed by the vehicle manufacturer. No additional plate shall be requested after the approval by the approval authority has been granted.
19A	UN Regulation No 14 (Seat belt anchorages)	The applicant shall submit a statement from the manufacturer establishing that the particular vehicle, the VIN of which has to be specified, complies with at least one of the following: — UN Regulation No 14; — FMVSS No 210 (Seat belt assembly anchorages); or — Article 22-3 of JSRRV.
20A	UN Regulation No 48 (Installation of lighting and light signalling devices)	(a) The lighting installation shall meet the requirements of UN Regulation No 48, series of amendments 03, with the exception of the requirements of Annexes 5 and 6 to that Regulation. (b) No exemption shall be permitted in respect of the number, the essential design characteristics, the electrical connections, and the colour of light emitted or retro-reflected of the lights and signalling devices referred to in items 21 to 26 and in items 28 to 30. (c) Lights and signalling devices that, for the purpose of fulfilling the requirements of point (a) must be retrofitted shall bear an 'EU' type-approval mark. (d) Lamps fitted with gas-discharged light source are only permitted in conjunction with the installation of headlamp cleaning device and an automatic headlamp-levelling device where appropriate. (e) Headlamp dipped-beams shall be adapted to the direction of traffic legally in force in the country where the vehicle is granted approval.
21A	UN Regulation No 3 (Retro reflectors)	Where necessary, two additional retro reflectors bearing an 'EU' approval mark shall be added at the rear, the position of which shall comply with UN Regulation No 48.

▼B

Item	Regulatory act reference	Alternative requirements
22A	UN Regulations No 7, No 87 and No 91 (End-outline, front position (side), rear-position (side), stop, side marker, daytime running lamps)	The requirements set out in the UN Regulations No 7, No 87 and No 91 shall not apply. However, the correct functioning of the lights shall be checked by the technical service.
23A	UN Regulation No 6 (Direction indicators)	The requirements set out in UN Regulation No 6 shall not apply. However, the correct functioning of the lights shall be checked by the technical service.
24A	UN Regulation No 4 (Rear registration plate lamps)	The requirements set out in UN Regulation No 4 shall not apply. However, the correct functioning of the lights shall be checked by the technical service.
25C, 25E, 25F	UN Regulations No 98, No 112 and No 123 (Headlamps (including bulbs))	(a) The illumination produced by the passing beam of the headlamps fitted to the vehicle shall be checked under paragraph 6 of UN Regulation No 112 concerning headlamps emitting an asymmetrical passing beam. The tolerances included in Annex 5 to that Regulation may be referred to for that purpose. (b) The same requirement shall be fulfilled for the passing beam of headlamps covered by UN Regulation No 98 or No 123.
26A	UN Regulation No 19 (Front fog lamps)	The requirements set out in UN Regulation No 19 shall not apply. However, the correct functioning of the lights if fitted shall be checked by the technical service.
27A	Regulation (EU) No 1005/2010 (Towing hooks)	The requirements set out in Regulation (EU) No 1005/2010 shall not apply.
28A	UN Regulation No 38 (Rear fog lamps)	The requirements set out in UN Regulation No 38 shall not apply. However, the correct functioning of the lights shall be checked by the technical service.
29A	UN Regulation No 23 (Reversing lamps)	The requirements set out in UN Regulation No 23 shall not apply. However, the correct functioning of the lights if fitted shall be checked by the technical service.
30A	UN Regulation No 77 (Parking lamps)	The requirements set out in UN Regulation No 77 shall not apply. However, the correct functioning of the lights if fitted shall be checked by the technical service.
31A	UN Regulation No 16 (Seat belts and restraint systems)	Components (a) Seat belts shall not be required to be type-approved in accordance with UN Regulation No 16.

▼B

Item	Regulatory act reference	Alternative requirements
		(b) However, each seat belt shall bear an identification label. (c) The indications on the label shall be consistent with the decision concerning seat belt anchorages (Re: entry 19). Installation requirements (a) The vehicle shall be fitted with seat belts in accordance with the requirements set out in Annex XVI to UN Regulation No 16. (b) Where a number of seat belts have to be retrofitted in accordance with point (a), they shall be of an approved type in accordance with UN Regulation No 16.
32A	UN Regulation No 125 (Forward vision)	(a) No obstruction in the 180° forward field of vision of the driver as defined in paragraph 5.1.3 of UN Regulation No 125 shall be permitted. (b) By derogation from point (a), the 'A pillars' and the equipment listed in paragraph 5.1.3 of UN Regulation No 125 shall not be considered as obstruction. (c) The number of 'A pillars' shall not exceed 2.
33A	UN Regulation No 121 (Identification of controls, tell-tales and indicators)	(a) The symbols including the colour of their corresponding tell-tales the presence of which is mandatory by virtue of UN Regulation No 121 shall comply with that UN Regulation. (b) Where this is not the case, the technical service shall verify that the symbols, tell-tales and indicators fitted to the vehicle provide the driver with comprehensible information about the operation of the controls in question.
34A	Regulation (EU) No 672/2010 (Defrost/Demist)	The vehicle shall be equipped with adequate windscreen defrosting and windscreen demisting devices. A windscreen defrosting device which complies as a minimum with point 1.1.1 of Annex II to Regulation (EU) No 672/2010 shall be deemed 'adequate'. A windscreen demisting device which complies as a minimum with point 1.2.1 of Annex II to Regulation (EU) No 672/2010 shall be deemed 'adequate'.
35A	Regulation (EU) No 1008/2010 (Wash/Wipe)	The vehicle shall be equipped with adequate windscreen washing and windscreen wiping devices. A windscreen washing and wiping device that complies as a minimum with the conditions set out in point 1.1.5 of Annex III to Regulation (EU) No 1008/2010 shall be deemed 'adequate'.

▼B

Item	Regulatory act reference	Alternative requirements
36A	UN Regulation No 122 (Heating systems)	(a) The passenger compartment shall be fitted with a heating system. (b) Combustion heaters and their installation shall comply with Annex 7 to UN Regulation No 122. In addition, LPG combustion heaters and LPG heating systems shall fulfil the requirements set out in Annex 8 to UN Regulation No 122. (c) Additional heating systems which are retrofitted shall comply with the requirements set out in that UN Regulation No 122.
37A	Regulation (EU) No 1009/2010 (Wheel guards)	(a) The vehicle shall be designed as to protect other road users against thrown-up stones, mud, ice, snow and water and to reduce the dangers due to contact with the moving wheels. (b) The technical service may check that the technical requirements set out in Annex II to Regulation (EU) No 1009/2010 are complied with. (c) Section 3 of Annex I to that Regulation shall not apply.
38A	UN Regulation No 25 (Head restraints)	The requirements of UN Regulation No 25 shall not apply.
44A	Regulation (EU) No 1230/2012 (Masses and dimensions)	(a) The requirements of point 1 of Part A of Annex I to Regulation (EU) No 1230/2012 shall be fulfilled. (b) For the purposes of point (a), the masses to be considered are the following: — the mass in running order defined in point (4) of Article 2 of Regulation (EU) No 1230/2012 as measured by the technical service; and — the laden masses either stated by the vehicle manufacturer or shown on the manufacturer's plate including stickers or information available in the owner's manual. Those masses shall be deemed the technically permissible maximum laden masses. (c) No exemption shall be permitted in respect of the maximum permissible dimensions.
45A	UN Regulation No 43 (Safety glazing)	Components (a) The glazing shall be made either of tempered or laminated safety glass. (b) Fitting of plastic glazing shall be permitted only on locations situated behind the ‘B’ pillar. (c) Glazing shall not be required to be approved under UN Regulation No 43.

▼B

Item	Regulatory act reference	Alternative requirements
		Installation (a) The installation requirements set out in Annex 21 to UN Regulation No 43 shall apply. (b) No tinted films that would reduce the regular light transmission under the required minimum shall be permitted on the windscreen and on the glazing located in front of the 'B' pillar.
46	Directive 92/23/EEC (Tyres)	Components Tyres shall bear an 'EC' type-approval mark including the symbol 's' (for sound). Installation (a) The dimensions, load-capacity index and speed category of the tyres shall fulfil the requirements of Annex IV to Directive 92/23/EEC. (b) The speed category symbol of the tyre shall be compatible with the maximum design speed of the vehicle. This requirement shall apply notwithstanding the presence of a speed limiter. (c) The maximum speed of the vehicle shall be stated by the vehicle manufacturer. However, the technical service may assess the maximum design speed of the vehicle by using the engine maximum power output, the maximum number of revolutions per minute and the data concerning the kinematic chain.
50A	UN Regulation No 55 (Couplings)	Separate technical units (a) OEM couplings intended for towing a trailer whose maximum mass does not exceed 1 500 kg shall not be required to be type-approved under UN Regulation No 55. A coupling is deemed OEM equipment where it is described in the owner's manual or an equivalent supporting document provided to the buyer by the vehicle manufacturer. Where such coupling is approved with the vehicle, an appropriate text shall be included in the approval certificate stating that the owner is responsible for ensuring compatibility with the coupling device fitted to the trailer. (b) Couplings other than those referred to in point (a), as well as couplings that are retrofitted, shall be type-approved in accordance with UN Regulation No 55.

▼B

Item	Regulatory act reference	Alternative requirements
		Installation on the vehicle The technical service shall check that the installation of the coupling devices comply with paragraph 6 of UN Regulation No 55.
53A	UN Regulation No 94 (Frontal impact) ([e])	(a) The applicant shall submit a statement from the manufacturer establishing that the particular vehicle, of which the VIN has to be specified, complies with at least one of the following: — UN Regulation No 94; — FMVSS No 208 (Occupant crash protection); — Article 18 of JSRRV. (b) A test in accordance with paragraph 5 of UN Regulation No 94 may be conducted on a production vehicle at the request of the applicant. The test shall be conducted by a technical service that has been designated for carrying out this test. A detailed report shall be issued by that technical service to the applicant.
54A	UN Regulation No 95 (Side impact)	(a) The applicant shall submit a statement from the manufacturer establishing that the particular vehicle, of which the VIN has to be specified complies with at least one of the following: — UN Regulation No 95; — FMVSS No 214 (Side impact protection); — Article 18 of JSRRV. (b) A test in accordance with section 5 of UN Regulation No 95 may be conducted on a production vehicle at the request of the applicant. The test shall be conducted by a technical service that has been designated for carrying out this test. A detailed report shall be issued by that technical service to the applicant.

▼M1

58	UN Regulation No 127 Regulation (EU) 2019/2144 (Pedestrian protection)	Vehicles shall be fitted with an electronic antilock braking system acting on all wheels. The requirements of UN Regulation No 127 shall apply. Any frontal protection system shall either be an integral part of the vehicle and thus compliant with the requirements of UN Regulation No 127 or be type-approved as separate technical unit.

▼B

59	Directive 2005/64/EC (Recyclability)	The requirements of that Directive shall not apply.
61	Directive 2006/40/EC (Air-conditioning system)	The requirements of that Directive shall apply.

▼B

Item	Regulatory act reference	Alternative requirements
▼M1		
62	UN Regulation No 134 Regulation (EU) 2019/2144 (Hydrogen system)	The requirements of UN Regulation No 134 shall apply. Alternatively, it shall be demonstrated that the vehicle complies with: — Substantive requirements of Regulation (EC) No 79/2009 in its version applicable on 5 July 2022; — Attachment 100 – Technical Standard For Fuel Systems Of Motor Vehicle Fueled By Compressed Hydrogen Gas (Japan); — GB/T 24549-2009 Fuel cell electric vehicles – safety requirements (China); — International standard ISO 23273:2013 Part 1: Vehicle functional safety and Part 2: Protection against hydrogen hazards for vehicles fuelled with compressed hydrogen; or — SAE J2578 – General Fuel Cell Vehicle Safety
▼B		
72	Regulation (EU) 2015/758 (eCall system)	The requirements of that Regulation shall not apply.

([1]) Council Directive 70/157/EEC of 6 February 1970 on the approximation of the laws of the Member States relating to the permissible sound level and the exhaust system of motor vehicles (OJ L 42, 23.2.1970, p. 16).

Part II Vehicles belonging to category N_1

Item	Regulatory act reference	Alternative requirements
2A	Regulation (EC) No 715/2007 (Emissions (Euro 5 and Euro 6) light duty vehicles / access to information)	Tailpipe emissions (a) A type 1 test shall be conducted in accordance with Annex III to Regulation (EC) No 692/2008 using the deterioration factors set out in point 1.4 of Annex VII to that Regulation. The emission limits to be applied shall be those specified in Table 1 and Table 2 of Annex I to Regulation (EC) No 715/2007. (b) The vehicle shall not be required to exhibit 3 000 km as mentioned in paragraph 3.1.1 of Annex 4 to UN Regulation No 83. (c) The fuel to be used for the test shall be the reference fuel as prescribed in Annex IX to Regulation (EC) No 692/2008. (d) The dynamometer shall be set up in accordance with the technical requirements of paragraph 3.2 of Annex 4 to UN Regulation No 83. (e) The test referred to in point (a) shall not be conducted where it can be shown that the vehicle complies with the California Code Regulations referred to in point 2 of Annex I to Regulation (EC) No 692/2008. Evaporative emissions For petrol-fuelled engines, the presence of an evaporate emissions control system (e.g. a charcoal canister) shall be required.

▼B

Item	Regulatory act reference	Alternative requirements
		Crankcase emissions The presence of a device for recycling crankcase gases shall be required. OBD The vehicle shall be fitted with an OBD system. OBD-interface must be able to communicate with common diagnostic tools used for periodic technical inspections. Smoke opacity (a) Vehicles equipped with a diesel-fuelled engine shall be tested in accordance with the tests methods referred to in Appendix 2 to Annex IV to Regulation (EC) No 692/2008. (b) The corrected value of the absorption coefficient shall be affixed, conspicuously and in a readily accessible place. CO_2 emissions and fuel consumption (a) A test shall be conducted in accordance with Annex XII to Regulation (EC) No 692/2008. (b) The vehicle shall not be required to exhibit 3 000 km as requested in paragraph 3.1.1 of Annex 4 to UN Regulation No 83. (c) Where the vehicle complies with the California Code Regulations referred to in point 2.1.1 of Annex I to Commission Regulation (EC) No 692/2008 and therefore no test of tailpipe emissions is required to be performed, Member States shall calculate CO_2 emissions and fuel consumption with the formula laid down in the explanatory notes ([b]) and ([c]). Access to information The provisions regarding access to information shall not apply. Power measurement (a) The applicant shall submit a statement from the manufacturer stating the maximum engine power output in kW as well as the corresponding regime in revolutions per minute. (b) An engine power output curve providing the same information may alternatively be provided by the applicant.
3A	UN Regulation No 34 (Fuel tanks — Rear protective devices)	Fuel tanks (a) Fuel tanks shall comply with paragraph 5 of UN Regulation No 34 with the exception of paragraphs 5.1, 5.2 and 5.12. In particular, they shall comply with paragraph 5.9 and 5.9.1 but no dripping test shall be conducted.

▼B

Item	Regulatory act reference	Alternative requirements
		(b) LPG or CNG tanks shall be type-approved in accordance with, respectively UN Regulations No 67, series of amendments 01, or UN Regulation No 110 ([a]). Specific provisions for fuel tanks made of a plastic material The applicant shall submit a statement from the manufacturer establishing that the fuel tank on the particular vehicle, of which the VIN has to be specified, complies either with at least one of the following: — FMVSS No 301 (Fuel system integrity); — Annex 5 to UN Regulation No 34. Rear protective device (a) The rear part of the vehicle shall be constructed in accordance with paragraphs 8 and 9 of UN Regulation No 34.
4A	Regulation (EU) No 1003/2010 (Rear registration plate space)	Space, inclination, angles for visibility and position of the registration plate shall comply with Regulation (EU) No 1003/2010.
5A	UN Regulation No 79 (Steering effort)	Mechanical systems (a) The steering mechanism shall be built as to self-centre. In order to check compliance with this provision, a test shall be conducted in accordance with paragraphs 6.1.2 and 6.2.1 of UN Regulation No 79. (b) The failure of the power steering equipment shall not lead to a complete loss of control of the vehicle. Complex electronic vehicle control system (‘Drive-by wire’ devices) Complex electronic control system shall be permitted only if they comply with Annex 6 to UN Regulation No 79.
6A	UN Regulation No 11 (Door latches and hinges)	Compliance with paragraph 6.1.5.4 of UN Regulation No 11
7A	UN Regulation No 28 (Audible warning)	Components The audible warning devices are not required to be type-approved in accordance with UN Regulation No 28. However, they shall emit a continuous sound as required in paragraph 6.1.1 of UN Regulation No 28.

▼B

Item	Regulatory act reference	Alternative requirements
		Installation on vehicle (a) A test shall be conducted in accordance with paragraph 6.2 of UN Regulation No 28. (b) The maximum sound pressure level shall be in accordance with paragraph 6.2.7.
8A	UN Regulation No 46 (Indirect vision devices)	Components (a) The vehicle shall be fitted with the rear-view mirrors prescribed in paragraph 15.2 of UN Regulation No 46. (b) They are not required to be type-approved in accordance with UN Regulation No 46. (c) The radii of curvature of the mirrors shall not cause significant image distortions. At the discretion of the technical service, the radii of curvature shall be checked in accordance with the method described in Appendix 1 to Annex 7 to UN Regulation No 46. The radii of curvature shall not be less than those required by paragraph 6.1.2.2.4 of UN Regulation No 46. Installation on vehicle Measurement shall be conducted in order to ensure that the fields of vision comply with paragraph 15.2.4 of UN Regulation No 46.
9B	UN Regulation No 13-H (Braking)	General provisions (a) The braking system shall be built in accordance with paragraph 5 of UN Regulation No 13-H. (b) Vehicles shall be fitted with an electronic antilock braking system acting on all wheels. (c) The performances of the braking system shall comply with Annex III to UN Regulation No 13-H. (d) For these purposes, road tests shall be conducted on a track the surface of which possesses high adhesion. The test on the parking brake shall be conducted on a 18 % gradient (up and down). Only those tests mentioned under the headings ‘Service brake’ and ‘Parking brake’ below shall be conducted. In each case, the vehicle shall be in fully laden conditions. (e) The road test referred to in point (c) shall not be conducted where the applicant can submit a statement from the manufacturer establishing that the vehicle complies either with UN Regulation No 13-H including supplement 5 or with FMVSS No 135.

▼B

Item	Regulatory act reference	Alternative requirements
		Service brake (a) A 'Type 0' test as prescribed in paragraphs 1.4.2 and 1.4.3 of Annex 3 to UN Regulation No 13-H shall be conducted. (b) In addition, a 'Type I' test as prescribed in paragraph 1.5 of Annex 3 to UN Regulation No 13-H shall be conducted. Parking brake A test shall be conducted in accordance with paragraph 2.3 of Annex 3 to UN Regulation No 13-H.
10A	UN Regulation No 10 (Radio interference (electromagnetic compatibility))	Components (a) Electrical/electronic sub-assemblies are not required to be type-approved in accordance with UN Regulation No 10. (b) However, electric/electronic devices retrofitted shall comply with UN Regulation No 10. Emitted electromagnetic radiations The applicant shall submit a statement from the manufacturer establishing that the vehicle complies with UN Regulation No 10 or with the following alternative standards: — Broadband electromagnetic radiation: CISPR 12 or SAE J551-2; — Narrowband electromagnetic radiation: CISPR 12 (off-board) or 25 (in-board) or SAE J551-4 and SAE J1113-41. Immunity tests Immunity test shall be waived.
13B	UN Regulation No 116 (Anti-theft and immobiliser)	(a) In order to prevent unauthorised use, the vehicle shall be fitted with a locking device as defined in paragraph 5.1.2 of UN Regulation No 116. (b) If an immobiliser is fitted, it shall comply with the technical requirements of paragraph 8.1.1 of UN Regulation No 116.
14A	UN Regulation No 12 (Protective steering)	(a) The applicant shall submit a statement from the manufacturer establishing that the particular vehicle, the VIN of which has to be specified, complies with at least one of the following: — UN Regulation No 12; — FMVSS No 203 (Impact protection for the driver from the steering control system) including FMVSS No 204 (Steering control rearward displacement); — Article 11 of JSRRV.

▼B

Item	Regulatory act reference	Alternative requirements
		(b) A test in accordance with Annex 3 to UN Regulation No 12 may be conducted on a production vehicle at the request of the applicant. The test shall be conducted by a technical service that has been designated for carrying out this test. A detailed report shall be issued by that technical service to the applicant.
15A	UN Regulation No 17 (Seats strength — head restraints)	Seats, seat anchorages and adjustment systems Seats and their adjustable systems shall comply with paragraph 5.3 of UN Regulation No 17. Head restraints (a) Head restraints shall fulfil the requirements of section 5 of UN Regulation No 17 and Annex 4 to UN Regulation No 17. (b) Only the tests described in paragraphs 5.12, 6.5, 6.6 and 6.7 of UN Regulation No 17 shall be conducted.
17A	UN Regulation No 39 (Speedometer — reverse gear)	Speedometer equipment (a) The dial shall comply with paragraphs 5.1 to 5.1.4 of UN Regulation No 39. (b) When the technical service has reasonable grounds to believe that the speedometer is not calibrated with a sufficient accuracy, it may require that the tests prescribed in paragraph 5.2 of UN Regulation No 39 be conducted. Reverse gear The gear mechanism shall include a reverse gear.
18A	Regulation (EU) No 19/2011 (Statutory plates)	VIN (a) The vehicle shall be fitted with a VIN comprising a minimum of 8 and a maximum of 17 characters. VIN comprising 17 characters shall fulfil the requirements set out in international standards ISO 3779:1983 and 3780:1983. (b) The VIN shall be located in a clearly visible and accessible position in such a way as it cannot be obliterated or deteriorate. (c) Where no VIN is stamped in the chassis or in the body, a Member State may require that it is retrofitted in application of its national law. In such a case, the competent authority of that Member State shall supervise the operation. Statutory plate The vehicle shall be fitted with an identification plate affixed by the vehicle manufacturer.

▼B

Item	Regulatory act reference	Alternative requirements
		No additional plate shall be requested after the approval has been granted.
19A	UN Regulation No 14 (Seat belt anchorages)	The applicant shall submit a statement from the manufacturer establishing that the particular vehicle, of which the VIN has to be specified, complies with at least one of the following: — UN Regulation No 14; — FMVSS No 210 (Seat belt assembly anchorages); — Article 22-3 of JSRRV.
20A	UN Regulation No 48 (Installation of lighting and light signalling devices)	(a) The lighting installation shall meet the essential requirements of UN Regulation No 48 series of amendments 03 with the exception of those of Annexes 5 and 6 to UN Regulation No 48. (b) No exemption shall be permitted in respect of the number, the essential design characteristics, the electrical connections, and the colour of light emitted or retro-reflected of the lights and signalling devices referred to in items 21 to 26 and in items 28 to 30. (c) Lights and signalling devices that, for the purpose of fulfilling with the requirements of point (a) must be retrofitted shall bear an 'EU' type-approval mark. (d) Lamps fitted with gas-discharged light source are only permitted in conjunction with the installation of headlamp cleaning device and an automatic headlamp-levelling device where appropriate. (e) Headlamp dipped-beams shall be adapted to the direction of traffic legally in force in the country where the vehicle is granted approval.
21A	UN Regulation No 3 (Retro reflectors)	Where necessary, two additional retro reflectors bearing an 'EC' approval mark shall be added at the rear, the position of which shall comply with UN Regulation No 48.
22A	UN Regulations No 7, No 87 and No 91 (End-outline, front position (side), rear-position (side), stop, side marker, daytime running lamps)	The requirements set out in UN Regulations No 7, No 87 and No 91 shall not apply. However, the correct functioning of the lights shall be checked by the technical service.

▼B

Item	Regulatory act reference	Alternative requirements
23A	UN Regulation No 6 (Direction indicators)	The requirements set out in UN Regulation No 6 shall not apply. However, the correct functioning of the lights shall be checked by the technical service.
24A	UN Regulation No 4 (Rear registration plate lamps)	The requirements set out in UN Regulation No 4 shall not apply. However, the correct functioning of the lights shall be checked by the technical service.
25C, 25E, 25F	UN Regulations No 98, No 112 and No 123 (Headlamps (including bulbs))	(a) The illumination produced by the passing beam of the headlamps fitted to the vehicle shall be checked under the provisions of paragraph 6 of UN Regulation No 112 concerning headlamps emitting an asymmetrical passing beam. The tolerances included in Annex 5 to that Regulation may be referred to for that purpose. (b) The same requirement shall apply to the passing beam of headlamps covered by UN Regulation No 98 or No 123.
26A	UN Regulation No 19 (Front fog lamps)	The provisions of UN Regulation No 19 shall be waived. However, the correct functioning of the lights if fitted shall be checked by the technical service.
27A	Regulation (EU) No 1005/2010 (Towing hooks)	The requirements of Regulation (EU) No 1005/2010 shall be waived.
28A	UN Regulation No 38 (Rear fog lamps)	The provisions of UN Regulation No 38 shall be waived. However, the correct functioning of the lights shall be checked by the technical service.
29A	UN Regulation No 23 (Reversing lamps)	The provisions of UN Regulation No 23 shall be waived. However, the correct functioning of the lights if fitted shall be checked by the technical service.
30A	UN Regulation No 77 (Parking lamps)	The provisions of UN Regulation No 77 shall be waived. However, the correct functioning of the lights if fitted shall be checked by the technical service.
31A	UN Regulation No 16 (Seat belts and restraint systems)	Components (a) Seat belts shall not be required to be type-approved in accordance with UN Regulation No 16. (b) However, each seat belt shall bear an identification label. (c) The indications on the label shall be consistent with the decision concerning seat belt anchorages (Re: entry 19).

▼B

Item	Regulatory act reference	Alternative requirements
		Installation requirements (a) The vehicle shall be fitted with seat belts in accordance with the requirements set out in Annex XVI to UN Regulation No 16. (b) Where a number of seat belts have to be retrofitted in accordance with point (a), they shall be of an approved type in accordance with UN Regulation No 16.
33A	UN Regulation No 121 (Identification of controls, tell-tales and indicators)	(a) The symbols including the colour of their corresponding tell-tales the presence of which is mandatory by virtue of UN Regulation No 121 shall comply with that UN Regulation. (b) Where this is not the case, the technical service shall verify that the symbols, tell-tales and indicators fitted to the vehicle provide the driver with comprehensible information about the operation of the controls in question.
34A	Regulation (EU) No 672/2010 (Defrost/Demist)	The vehicle shall be equipped with adequate windscreen defrosting and windscreen demisting devices.
35A	Regulation (EU) No 1008/2010 (Wash/Wipe)	The vehicle shall be equipped with adequate windscreen washing and windscreen wiping devices.
36A	UN Regulation No 122 (Heating systems)	(a) The passenger compartment shall be fitted with a heating system. (b) Combustion heaters and their installation shall comply with Annex 7 to UN Regulation No 122. In addition, LPG combustion heaters and LPG heating systems shall fulfil the requirements set out in Annex 8 to UN Regulation No 122. (c) Additional heating systems that are retrofitted shall comply with the requirements set out in UN Regulation No 122.
41A	Regulation (EC) No 595/2009 (Emissions (Euro VI) heavy-duty vehicles – OBD)	Tailpipe emissions (a) A test shall be conducted in accordance with Annex III to Commission Regulation (EU) No 582/2011 ([1]) using the deterioration factors set out in point 3.6.1 of Annex VI to Regulation (EU) No 582/2011. (b) The limits to be applied shall be those set out in the table of Annex I to Regulation (EC) No 595/2009. (c) The fuel to be used for the test shall be the reference fuel as prescribed in Annex IX to Regulation (EU) No 582/2011.

([1]) Commission Regulation (EU) No 582/2011 of 25 May 2011 implementing and amending Regulation (EC) No 595/2009 of the European Parliament and of the Council with respect to emissions from heavy duty vehicles (Euro VI) and amending Annexes I and III to Directive 2007/46/EC of the European Parliament and of the Council (OJ L 167, 25.6.2011, p. 1).

▼B

Item	Regulatory act reference	Alternative requirements
		CO_2 emissions The CO_2 emissions and fuel consumption shall be determined in accordance with Annex VIII to Regulation (EU) No 582/2011. OBD (a) The vehicle shall be fitted with an OBD system. (b) The OBD-interface must be able to communicate with an external OBD scan-tool as described in Annex X to Regulation (EU) No 582/2011. Requirements to ensure the correct operation of NO_x control measures The vehicle shall be fitted with a system ensuring the correct operation of NO_x control measures in accordance with Annex XIII to Regulation (EU) No 582/2011. Power measurement (a) The applicant shall submit a statement from the manufacturer stating the maximum engine power output in Kw as well as the corresponding regime. (b) An engine power output curve providing the same information may alternatively be provided by the applicant.
45A	UN Regulation No 43	Components (a) The glazing shall be made either of tempered or laminated safety glass. (b) Fitting of plastic glazing shall be permitted only on locations situated behind the ‘B’ pillar. (c) Glazing shall not be required to be approved under UN Regulation No 43. Installation (a) The installation requirements set out in Annex 21 to UN Regulation No 43 shall apply. (b) No tinted films that reduce the regular light transmission under the required minimum shall be permitted on the windscreen and on the glazing located in front of the ‘B’ pillar.
46A	Commission Regulation (EU) 458/2011 (Installation of tyres)	Installation (a) The dimensions, load-capacity index and speed category of the tyres shall fulfil the requirements of Commission Regulation (EU) 458/2011.

▼B

Item	Regulatory act reference	Alternative requirements
		(b) The speed category symbol of the tyre shall be compatible with the maximum design speed of the vehicle. (c) This requirement shall apply notwithstanding the presence of a speed limiter. (d) The maximum speed of the vehicle shall be stated by the vehicle manufacturer. However, the technical service may assess the maximum design speed of the vehicle by using the engine maximum power output, the maximum number of revolutions per minute and the data concerning the kinematic chain.
46B	UN Regulation No 30 (C_1 tyres)	Components Tyres shall bear a type-approval mark.
46D	UN Regulation No 117 (Tyre rolling sound emissions, adhesion on wet surface and rolling resistance)	Components Tyres shall bear a type-approval mark.
46E	►**M1** Regulation (EU) 2019/2144 ◄ UN Regulation No 64 (Temporary use spare unit, run-flat tyres, tyre rolling sound emissions, adhesion on wet surface and rolling resistance)	Components Tyres shall bear type-approval mark. The fitting of TPMS shall not be required.
48A	Regulation (EU) No 1230/2012 (Masses and dimensions)	(a) The requirements of Annex I, Part A to Regulation (EU) No 1230/2012 shall be fulfilled. However, the requirements set out in point 5 of Part A of Annex I do not need to be fulfilled. (b) For the purposes of point (a) the masses to be considered are the following: — the mass in running order as defined in point (4) of Article 2 of Regulation (EU) No 1230/2012 as measured by the technical service; and — the maximum laden masses either stated by the vehicle manufacturer or shown on the manufacturer's plate, including stickers or information available in the owner's manual. Those masses shall be regarded as the technically permissible maximum laden masses.

▼B

Item	Regulatory act reference	Alternative requirements
		(c) Technical changes made by the applicant in order to decrease the maximum technically permissible laden mass of the vehicle to 3,5 tonnes or less, so that the vehicle may be granted individual vehicle approval shall not be permitted. (d) No exemption shall be permitted in respect of the maximum permissible dimensions.
49A	UN Regulation No 61 (External projections of cabs)	(a) The general requirements set out in section 5 of UN Regulation No 17 shall be fulfilled. (b) At the discretion of the technical service, the requirements set out in paragraphs 6.1, 6.5, 6.6, 6.7, 6.8 and 6.11 of UN Regulation No 17 shall be fulfilled.
50A	UN Regulation No 55 (Couplings)	Separate technical units (a) OEM couplings intended for towing a trailer of which the maximum mass does not exceed 1 500 kg shall not be required to be type-approved under UN Regulation No 55. (b) A coupling is deemed OEM equipment where it is described in the owner's manual or in an equivalent supporting document provided to the buyer by the vehicle manufacturer. (c) Where such coupling is approved with the vehicle, an appropriate text shall be included in the approval certificate stating that the owner is responsible for ensuring compatibility with the coupling device fitted to the trailer. (d) Couplings other than those referred to in point (a), as well as couplings that are retrofitted, shall be type-approved in accordance with UN Regulation No 55. Installation on the vehicle The technical service shall check that the installation of the coupling devices comply with paragraph 6 to UN Regulation No 55.
54	UN Regulation No 95 (Side impact)	(a) The applicant shall submit a statement from the manufacturer establishing that the particular vehicle, of which the VIN has to be specified, complies with at least one of the following: — UN Regulation No 95; — FMVSS No 214 (Side impact protection); — Article 18 of JSRRV. (b) A test in accordance with section 5 of UN Regulation No 95 may be conducted on a production vehicle at the request of the applicant.

▼B

Item	Regulatory act reference	Alternative requirements
		(c) The test shall be conducted by a technical service that been designated for carrying out this test. A detailed report shall be issued by that technical service to the applicant.
56A	UN Regulation No 105 (Vehicles intended for the transport of dangerous goods)	Vehicles intended for the transport of dangerous goods shall comply with UN Regulation No 105.
▼M1 58	UN Regulation No 127 Regulation (EU) 2019/2144 (Pedestrian protection)	Vehicles shall be fitted with an electronic antilock braking system acting on all wheels. The requirements of UN Regulation No 127 shall apply. Any frontal protection system shall either be an integral part of the vehicle and thus compliant with the requirements of UN Regulation No 127 or be type-approved as separate technical unit
▼B 59	Directive 2005/64/EC (Recyclability)	The requirements of that Directive shall not apply.
61	Directive 2006/40/EC (Air-conditioning system)	The requirements of that Directive shall apply.
▼M1 62	UN Regulation No 134 Regulation (EU) 2019/2144 (Hydrogen system)	The requirements of UN Regulation No 134 shall apply. Alternatively, it shall be demonstrated that the vehicle complies with: — Substantive requirements of Regulation (EC) No 79/2009 in its version applicable on 5 July 2022; — Attachment 100 – Technical Standard For Fuel Systems Of Motor Vehicle Fueled By Compressed Hydrogen Gas (Japan); — GB/T 24549-2009 Fuel cell electric vehicles – safety requirements (China); — International standard ISO 23273:2013 Part 1: Vehicle functional safety and Part 2: Protection against hydrogen hazards for vehicles fuelled with compressed hydrogen; or — SAE J2578 – General Fuel Cell Vehicle Safety
▼B 72	Regulation (EU) 2015/758 (eCall system)	The requirements of that Regulation shall not apply.

▼B

Explanatory notes to Appendix 2

1. Abbreviations used in this Appendix:

‘OEM’: original equipment provided by the manufacturer

‘FMVSS’: Federal Motor Vehicle Safety Standard of the U.S. Department of Transportation

‘JSRRV’: Japan Safety Regulations for Road Vehicles

‘SAE’: Society of Automotive Engineers

‘CISPR’: Comité international spécial des perturbations radioélectriques.

2. Remarks:

(a) the complete LPG or CNG installation shall be checked against the UN Regulations No 67, No 110 or No 115, as appropriate;

(b) the formula to be used for the assessment of CO_2 emissions shall be as follows:

Petrol engine and manual gearbox:

$CO_2 = 0{,}047\ m + 0{,}561\ p + 56{,}621$

Petrol engine and automatic gearbox

$CO_2 = 0{,}102\ m + 0{,}328\ p + 9{,}481$

Petrol engine and hybrid electric:

$CO_2 = 0{,}116\ m - 57{,}147$

Diesel engine and manual gearbox:

$CO_2 = 0{,}108\ m - 11{,}371$

Diesel engine and automatic gearbox:

$CO_2 = 0{,}116\ m - 6{,}432$

Where: CO_2 is the combined mass of CO_2 emissions in g/km, ‘m’ is the mass of the vehicle in running order in kg and ‘p’ the maximum engine power output in kW.

Combined mass of CO_2 shall be calculated with one decimal place, then rounded to the nearest whole number as follows:

(i) if the figure following the decimal point is below 5, the total is rounded down;

(ii) if the figure following the decimal point is equal to 5 or above 5, the total is rounded up;

(c) the formula to be used for the assessment of fuel consumption shall be as follows:

$CFC = CO_2 \times k^{-1}$

Where: CFC is the combined fuel consumption in l/100 km, CO_2 is the combined mass of CO_2 emissions in g/km after it has been rounded in accordance with the rule referred to in Remark (2 b), ‘k’ a coefficient equal to:

23,81 in the case of a petrol engine;

26,49 in the case of a diesel engine.

Combined fuel consumption shall be calculated with two decimal places, then rounded as follows:

▼B

(i) if the figure following the first decimal is below 5, the total is rounded down;

(ii) if the figure following the first decimal is equal to 5 or above 5, the total is rounded up.

PART II

List of UN Regulations recognised as an alternative to the Directives or Regulations referred to in Part I

▼M3

Where reference is made to a separate Directive or Regulation in the table of Part I, a type-approval issued under the following UN regulations, or a Universal International Whole Vehicle Type Approval issued under UN Regulation No 0 ([1]) that includes type-approval of the relevant item under the following UN Regulations, to which the Union has acceded as a Contracting Party to the United Nations Economic Commission for Europe 'Revised 1958 Agreement' by virtue of Council Decision 97/836/EC ([2]), or subsequent Council decisions as referred to in Article 3(3) of that Decision, shall be considered equivalent to an EU type-approval granted under the relevant separate Directive or Regulation.

▼B

Any further amendment to the UN Regulations listed in the following table ([3]) shall also be deemed to be equivalent to an EU type-approval, subject to the Decision referred to in Article 4(2) of Decision 97/836/EC.

▼M4

Installation requirements laid down in a Directive or Regulation in the table of Part I shall apply also to components and separate technical units approved in accordance with the UN Regulations listed in the following table.

▼M8

Item	Subject	UN Regulation No	Series of amendments
B14	Acoustic vehicle alerting system	138	01
G1	Sound level:		
	— motor vehicles	51	03
	— replacement silencing systems	59	03
G2	Tailpipe emissions of vehicle in lab ([1])	24 ([2]) ([9]) 83 ([2]) ([10]) 85 ([2]) 154 ([2]) 168 ([2]) ([3]) ([11])	03 08 00 02 ([4]) / 03 ([5]) ([6]) 00
G2a	Determination of specific CO_2 emissions and fuel consumption of vehicle and device for monitoring on board the vehicle consumption of fuel and/or electric energy ([1])		
G4	Tailpipe emissions on the road ([1])		
G5	Durability of tailpipe emissions ([1])		
G6	Crankcase emissions ([1])		
G7	Evaporative emissions ([1])		
G8	Low-temperature tailpipe emissions in lab ([1])		

([1]) OJ L 135, 31.5.2018, p. 1.
([2]) OJ L 346, 17.12.1997, p. 78.
([3]) For subsequent amendments, see UNECE TRANS/WP.29/343.

▼M8

Item	Subject	UN Regulation No	Series of amendments
G9	On-board diagnostics (1)		
G10	Absence of defeat device (1)		
G11	Auxiliary emissions strategies (1)		
G12	Anti-tampering (1)		
G16	Power determination (1)		
G17	Operation of systems using consumable reagent and pollution control systems (1)		
G3	Tailpipe emissions of engine in lab (7)	49	07
G4	Tailpipe emissions on the road (7)		
G5	Durability of tailpipe emissions (7)		
G6	Crankcase emissions (7)		
G9	On-board diagnostics (7)		
G10	Absence of defeat device (7)		
G11	Auxiliary emissions strategies (7)		
G12	Anti-tampering (7)		
G16	Measurement of engine power (7)		
G17	Operation of systems using consumable reagent and pollution control systems (7)		
G13	Recyclability (8)	133	00

(1) For 'Euro 6' light-duty vehicles.
(2) The combination of relevant UN type-approval certificates listed in this cell of the table shall be deemed equivalent to a 'Euro 6e', 'Euro 6e-bis' or 'Euro 6e-bis-FCM' type-approval certificate for the purposes of application for an EU whole vehicle type-approval in accordance with Regulation (EU) 2018/858.
(3) In accordance with UN Regulation No 168 only vehicle categories M_1, M_2 and N_1 shall be considered for type-approval certificate equivalency purposes.
(4) Type-approval certificates issued for level 1A are only considered for equivalence. In case of OVC-HEVs and OVC-FCHVs, only type-approvals issued in accordance with Supplement 1 to the 02 series of amendment or later shall be deemed equivalent.
(5) In case of OVC-HEVs and OVC-FCHVs, only type-approvals issued in accordance with Supplement 1 to the 03 series of amendment or later shall be deemed equivalent.
(6) The scope of the 03 series of amendment to UN Regulation No 154 is limited to vehicle categories M_1, M_2 and N_1. Therefore, only those vehicle categories shall be considered for type-approval equivalency purposes.
(7) For 'Euro VI' heavy-duty vehicles.
(8) The requirements set out in Annex I to Directive 2005/64/EC shall apply.
(9) A type-approval confirming compliance with Part III of UN Regulation No 24 (emission of visible exhaust pollutants) shall suffice.
(10) For the purpose of in-service conformity testing the manufacturer shall report all results of the ISC testing using the Electronic Platform for in-service conformity described in point 5.9 of Annex II to Regulation (EU) 2017/1151, or other appropriate means where this is not possible.
(11) For the purpose of data reporting, the manufacturer shall follow the provisions set out in point 7.7 of Annex IIIA to Regulation (EU) 2017/1151.

▼M4

PART III

List of regulatory acts setting out the requirements for the purpose of EU type-approval of special purpose vehicles

EXPLANATORY NOTES

to the tables in Appendices 1 to 6

X: Compliance with the regulatory act is required according to the vehicle category for which type-approval is sought. Any specific provisions noted in addition to this explanatory note shall be taken into account.

▼**M4**

G: In case of multi-stage approval, compliance with the regulatory act according to which the base vehicle (e.g. the chassis of which was used to build the special purpose vehicle) has been type-approved shall be accepted. In this case, any vehicle systems, their features, parts, equipment, components and separate technical units that have been modified or added by the manufacturer, may be assessed against the base vehicle's requirements. Any specific provisions noted in addition to this explanatory note shall be taken into account.

A: The approval authority may agree to fully or partly grant exemptions upon the condition that the manufacturer demonstrates to the satisfaction of the technical service that the vehicle cannot meet the full set of requirements due to its special purpose. The manufacturer shall however endeavour to meet the requirements to the largest possible extent taking into account proportionality. Those exemptions shall be described in Part 2 of the vehicle EU type-approval certificate as well as under 'remarks' in the Certificate of Conformity. Any specific provisions noted in addition to this explanatory note shall be taken into account.

▼M4

Appendix 1

Motor-caravans, ambulances and hearses

Item	Subject	Regulatory act	$M_1 \leq 2\ 500$ kg	$M_1 > 2\ 500$ kg	M_2	M_3
A	RESTRAINT SYSTEMS, CRASH TESTING, FUEL SYSTEM INTEGRITY AND HIGH VOLTAGE ELECTRICAL SAFETY					
A1	Interior fittings	Regulation (EU) 2019/2144	G Application is limited to the passenger compartment in front of the transverse plane passing through the torso reference line of the 3-D H machine placed on the rearmost seat designated for normal use when the vehicle is used on a public road, as well as to the respective reference zones of each seating position designated for normal use as defined in the regulatory act when the vehicle type is subject to the requirements applicable to vehicle category M_1. It does not apply to the patient compartment of ambulances Additional requirements for new types of ambulances: The patient compartment of ambulances shall comply with the requirements of EN 1789:2020 on Medical vehicles and their equipment – Road ambulances with the exception of Section 6.5, list of equipment. Proof of compliance shall be provided with a test report of the technical service and may be based on an assessment carried out by subcontractors or subsidiaries of the technical service in accordance with the provisions of Article 71.	G Application is limited to the passenger compartment in front of the transverse plane passing through the torso reference line of the 3-D H machine placed on the rearmost seat designated for normal use when the vehicle is used on a public road, as well as to the respective reference zones of each seating position designated for normal use as defined in the regulatory act when the vehicle type is subject to the requirements applicable to vehicle category M_1. It does not apply to the patient compartment of ambulances Additional requirements for new types of ambulances: The patient compartment of ambulances shall comply with the requirements of EN 1789:2020 on Medical vehicles and their equipment – Road ambulances with the exception of Section 6.5, list of equipment. Proof of compliance shall be provided with a test report of the technical service and may be based on an assessment carried out by subcontractors or subsidiaries of the technical service in accordance with the provisions of Article 71.	n/a for the passenger or patient compartment Additional requirements for new types of ambulances: The patient compartment of ambulances shall comply with the requirements of EN 1789:2020 on Medical vehicles and their equipment – Road ambulances with the exception of Section 6.5, list of equipment. Proof of compliance shall be provided with a test report of the technical service and may be based on an assessment carried out by subcontractors or subsidiaries of the technical service in accordance with the provisions of Article 71. If a wheelchair space is foreseen, the requirements for wheelchair accessible vehicles (code SH) relating to the wheelchair tie-down and occupant restraint systems shall also apply.	n/a for the passenger or patient compartment Additional requirements for new types of ambulances: The patient compartment of ambulances shall comply with the requirements of EN 1789:2020 on Medical vehicles and their equipment – Road ambulances with the exception of Section 6.5, list of equipment. Proof of compliance shall be provided with a test report of the technical service and may be based on an assessment carried out by subcontractors or subsidiaries of the technical service in accordance with the provisions of Article 71. If a wheelchair space is foreseen, the requirements for wheelchair accessible vehicles (code SH) relating to the wheelchair tie-down and occupant restraint systems shall also apply.

02018R0858 — EN — 02.08.2026 — 007.001 — 222

▼M4

Item	Subject	Regulatory act	$M_1 \leq 2\ 500$ kg	$M_1 > 2\ 500$ kg	M_2	M_3
			If a wheelchair space is foreseen, the requirements for wheelchair accessible vehicles (code SH) relating to the wheelchair tie-down and occupant restraint systems shall also apply.	If a wheelchair space is foreseen, the requirements for wheelchair accessible vehicles (code SH) relating to the wheelchair tie-down and occupant restraint systems shall also apply.		
A2	Seats and head restraints	Regulation (EU) 2019/2144	G Application is limited to seats designated for normal use when the vehicle is used on a public road. Seats that are not designated as such shall be clearly and permanently identified to users, either by means of a pictogram or a sign with an appropriate text. The energy dissipation and radii requirements are checked in accordance with paragraphs 5.2.3./5.2.4.2. and 5.2.4. of UN Regulation No 17 when the vehicle type is subject to the requirements applicable to vehicle category M_1. The luggage retention requirements of UN Regulation No 17 (para. 1, point (c) and Annex 9) do not apply.	G Application is limited to seats designated for normal use when the vehicle is used on a public road. Seats that are not designated as such shall be clearly and permanently identified to users, either by means of a pictogram or a sign with an appropriate text. The energy dissipation and radii requirements are checked in accordance with paragraphs 5.2.3./5.2.4.2. and 5.2.4. of UN Regulation No 17 when the vehicle type is subject to the requirements applicable to vehicle category M_1. The luggage retention requirements of UN Regulation No 17 (para. 1, point (c) and Annex 9) do not apply.	X Application limited to seats designated for normal use when the vehicle is used on a public road. Seats that are not designated as such shall be clearly and permanently identified to users, either by means of a pictogram or a sign with an appropriate text.	X Application limited to seats designated for normal use when the vehicle is used on a public road. Seats that are not designated as such shall be clearly and permanently identified to users, either by means of a pictogram or a sign with an appropriate text.

▼M4

Item	Subject	Regulatory act	$M_1 \leq 2\ 500$ kg	$M_1 > 2\ 500$ kg	M_2	M_3
A3	Bus seats	Regulation (EU) 2019/2144	not in scope	not in scope	X Application limited to seats designated for normal use when the vehicle is used on a public road. Seats that are not designated as such shall be clearly and permanently identified to users, either by means of a pictogram or a sign with an appropriate text.	X Application limited to seats designated for normal use when the vehicle is used on a public road. Seats that are not designated as such shall be clearly and permanently identified to users, either by means of a pictogram or a sign with an appropriate text.
A4	Safety-belt anchorages	Regulation (EU) 2019/2144	X Application limited to seats designated for normal use when the vehicle is used on a public road.	G Application limited to seats designated for normal use when the vehicle is used on a public road. At least anchorages for lap belts are required in the rear seating positions.	X Application limited to seats designated for normal use when the vehicle is used on a public road. At least anchorages for lap belts are required in the rear seating positions.	X Application limited to seats designated for normal use when the vehicle is used on a public road. At least anchorages for lap belts are required in the rear seating positions.
A5	Safety-belts and restraint systems	Regulation (EU) 2019/2144	X Application limited to seats designated for normal use when the vehicle is used on a public road.	G Application limited to seats designated for normal use when the vehicle is used on a public road. At least lap belts are required in the rear seating positions.	G Application limited to seats designated for normal use when the vehicle is used on a public road. At least lap belts are required in the rear seating positions.	G Application limited to seats designated for normal use when the vehicle is used on a public road. At least lap belts are required in the rear seating positions.
A6	Safety-belt reminders	Regulation (EU) 2019/2144	X Not required for rear seats	X Not required for rear seats	X Not required for rear seats	X Not required for rear seats

▼M4

Item	Subject	Regulatory act	$M_1 \leq 2\ 500$ kg	$M_1 > 2\ 500$ kg	M_2	M_3
A7	Partitioning systems	Regulation (EU) 2019/2144	equipment	equipment	Equipment	equipment
A8	Child restraint anchorages	Regulation (EU) 2019/2144	G ISOFIX is not required on ambulances and hearses	G ISOFIX is not required on ambulances and hearses	IF	IF
A9	Child restraint systems (IF)	Regulation (EU) 2019/2144	equipment	equipment	Equipment	equipment
A10	Enhanced child restraint systems (IF)	Regulation (EU) 2019/2144	equipment	equipment	Equipment	equipment
A11	Front underrun protection	Regulation (EU) 2019/2144	not in scope	not in scope	not in scope	not in scope
A12	Rear underrun protection	Regulation (EU) 2019/2144	X	X	X	X
A13	Lateral protection	Regulation (EU) 2019/2144	not in scope	not in scope	not in scope	not in scope
A14	Fuel tank safety (IF)	Regulation (EU) 2019/2144	X Modification to the routing and length of the refuelling duct and re-positioning of the original tank inboard is permissible provided all installation requirements are met.	X Modification to the routing and length of the refuelling duct and re-positioning of the original tank inboard is permissible provided all installation requirements are met.	X Modification to the routing and length of the refuelling duct and re-positioning of the original tank inboard is permissible provided all installation requirements are met.	X Modification to the routing and length of the refuelling duct and re-positioning of the original tank inboard is permissible provided all installation requirements are met.

▼M4

Item	Subject	Regulatory act	$M_1 \leq 2\ 500$ kg	$M_1 > 2\ 500$ kg	M_2	M_3
A15	Liquified petroleum gas safety (IF)	Regulation (EU) 2019/2144	X	G	G	X
A16	Compressed and liquified natural gas safety (IF)	Regulation (EU) 2019/2144	X	G	G	X
A17	Hydrogen safety (IF)	Regulation (EU) 2019/2144	X	G	G	X
A18	Hydrogen system material qualification (IF)	Regulation (EU) 2019/2144	X	X	X	X
A19	In-use electric safety (IF)	Regulation (EU) 2019/2144	X	G	X	X
A20	Frontal off-set impact	Regulation (EU) 2019/2144	X	G Completed vehicles are deemed to comply with the frontal off-set impact requirements provided that compliance has been demonstrated for at least the van or chassis-cab configuration, with appropriate powertrain, irrespective of the mass in running order increase, as part of a previous-stage type-approval and the relevant restraint systems have not been modified to the extent that it would result in a decrease of the level of safety, as agreed by the technical service.	not in scope	not in scope

▼M4

Item	Subject	Regulatory act	$M_1 \leq 2\ 500$ kg	$M_1 > 2\ 500$ kg	M_2	M_3
				Completed vehicles on the basis of a type-approved incomplete chassis-cowl configuration are exempted from the full-scale crash test. However, it shall be demonstrated to the satisfaction of the technical service that there is no unacceptable risk of fuel system integrity failure or unacceptable risk of direct contact with live parts of high voltage propulsion systems, after a frontal impact. Virtual testing methods may be used in accordance with Annex VIII to Regulation (EU) 2018/858.		
A21	Frontal full-width impact	Regulation (EU) 2019/2144	G	G Completed vehicles are deemed to comply with the frontal full-width impact requirements provided that compliance has been demonstrated for at least the van or chassis-cab configuration, with appropriate powertrain, irrespective of the mass in running order increase, as part of a previous-stage type-approval and the relevant restraint systems have not been modified to the extent that it would result in a decrease of the level of safety, as agreed by the technical service.	not in scope	not in scope

▼M4

Item	Subject	Regulatory act	$M_1 \leq 2\ 500$ kg	$M_1 > 2\ 500$ kg	M_2	M_3
				Completed vehicles on the basis of a type-approved incomplete chassis-cowl configuration are exempted from the full-scale crash test. However, it shall be demonstrated to the satisfaction of the technical service that there is no unacceptable risk of fuel system integrity failure or unacceptable risk of direct contact with live parts of high voltage propulsion systems, after a frontal impact. Virtual testing methods may be used in accordance with Annex VIII to Regulation (EU) 2018/858..		
A22	Protective steering	Regulation (EU) 2019/2144	X	G	not in scope	not in scope
A23	Replacement airbag	Regulation (EU) 2019/2144	equipment	equipment	equipment	equipment
A24	Cab impact	Regulation (EU) 2019/2144	not in scope	not in scope	not in scope	not in scope

▼M4

Item	Subject	Regulatory act	$M_1 \leq 2\ 500$ kg	$M_1 > 2\ 500$ kg	M_2	M_3
A25	Side impact	Regulation (EU) 2019/2144	X	G Completed vehicles are deemed to comply with the side impact requirements provided that compliance has been demonstrated for at least the van or chassis-cab configuration, with appropriate powertrain, irrespective of the mass in running order increase, as part of a previous-stage type-approval. Completed vehicles on the basis of a type-approved incomplete chassis-cowl configuration are exempted from the full-scale crash test. However, it shall be demonstrated to the satisfaction of the technical service that there is no unacceptable risk of fuel system integrity failure or unacceptable risk of direct contact with live parts of high voltage propulsion systems, after a side impact. Virtual testing methods may be used in accordance with Annex VIII to Regulation (EU) 2018/858.	not in scope	not in scope
A26	Pole side impact	Regulation (EU) 2019/2144	n/a	n/a	not in scope	not in scope

▼M4

Item	Subject	Regulatory act	$M_1 \leq 2\ 500$ kg	$M_1 > 2\ 500$ kg	M_2	M_3
A27	Rear impact	Regulation (EU) 2019/2144	X	G Completed vehicles are deemed to comply with rear impact requirements provided that compliance has been demonstrated for at least the van or chassis-cab configuration, with appropriate powertrain, as part of a previous-stage type-approval, irrespective of the mass in running order increase	not in scope	not in scope
A28	112-based eCall in-vehicles systems	Regulation (EU) 2015/758	G	G	not in scope	not in scope
B	VULNERABLE ROAD USERS, VISION AND VISIBILITY					
B1	Pedestrian leg and head protection	Regulation (EU) 2019/2144	X	G	not in scope	not in scope
B2	Enlarged head impact zone	Regulation (EU) 2019/2144	X	G Modifications to the interior fittings directly behind the windscreen do not have to be taken into account.	not in scope	not in scope

▼M4

Item	Subject	Regulatory act	$M_1 \leq 2\ 500$ kg	$M_1 > 2\ 500$ kg	M_2	M_3
B3	Frontal protection system	Regulation (EU) 2019/2144	equipment	equipment	equipment	equipment
B4	Advanced emergency braking for pedestrians and cyclists ahead	Regulation (EU) 2019/2144	X	G	not in scope	not in scope
B5	Pedestrian and cyclist collision warning	Regulation (EU) 2019/2144	not in scope	not in scope	X	X
B6	Blind spot information system	Regulation (EU) 2019/2144	not in scope	not in scope	X	X
B7	Reversing detection	Regulation (EU) 2019/2144	X	X	X	X
B8	Forward vision	Regulation (EU) 2019/2144	X	G	not in scope	not in scope
B9	Heavy-duty vehicles direct vision	Regulation (EU) 2019/2144	not in scope	not in scope	no requirements yet	no requirements yet
B10	Safety glazing	Regulation (EU) 2019/2144	X For all glazing other than the windscreen and side windows located forward of the driver's eye points, the material may be either of safety glass or rigid plastic glazing.	X For all glazing other than the windscreen and side windows located forward of the driver's eye points, the material may be either of safety glass or rigid plastic glazing.	X For all glazing other than the windscreen and side windows located forward of the driver's eye points, the material may be either of safety glass or rigid plastic glazing.	X For all glazing other than the windscreen and side windows located forward of the driver's eye points, the material may be either of safety glass or rigid plastic glazing.

▼M4

Item	Subject	Regulatory act	$M_1 \leq 2\ 500$ kg	$M_1 > 2\ 500$ kg	M_2	M_3
B11	Defrost/demist	Regulation (EU) 2019/2144	G	G	X Vehicles shall be fitted with an adequate windscreen defrosting and demisting device	X Vehicles shall be fitted with an adequate windscreen defrosting and demisting device
B12	Wash/wipe	Regulation (EU) 2019/2144	G	G	X Vehicles shall be fitted with adequate windscreen washing and wiping devices	X Vehicles shall be fitted with adequate windscreen washing and wiping devices
B13	Indirect vision devices	Regulation (EU) 2019/2144	X	G	G	G
B14	Acoustic Vehicle Alerting Systems	Regulation (EU) No 540/2014	X	X	X	X
C	VEHICLE CHASSIS, BRAKING, TYRES AND STEERING					
C1	Steering equipment	Regulation (EU) 2019/2144	X	G	G	G
C2	Lane departure warning	Regulation (EU) 2019/2144	not in scope	not in scope	n/a	n/a
C3	Emergency lane keeping	Regulation (EU) 2019/2144	X	G May be a C2 Lane departure warning system in case this was applicable for the base vehicle.	not in scope	not in scope

▼M4

Item	Subject	Regulatory act	$M_1 \leq 2\ 500$ kg	$M_1 > 2\ 500$ kg	M_2	M_3
C4	Braking	Regulation (EU) 2019/2144	G	G	G	G
C5	Replacement braking parts	Regulation (EU) 2019/2144	equipment	equipment	equipment	equipment
C6	Brake assist	Regulation (EU) 2019/2144	X	G	not in scope	not in scope
C7	Stability control	Regulation (EU) 2019/2144	X	G In the case of modifications to the stability control system, included as part of a previous stage type-approval, that are likely to affect the function of that base vehicle's stability control system, it shall be demonstrated that the vehicle has not been rendered unsafe or unstable. This shall be proven by tests e.g. performing rapid double lane-change manoeuvres in each direction at 80 km/h with sufficient severity to cause intervention by the stability control system. These interventions shall be well-controlled and shall improve the stability of the vehicle under those driving conditions in comparison to the stability of the vehicle with a disabled stability control system. All tests are subject to the agreement between the manufacturer and technical service.	n/a	n/a

▼M4

Item	Subject	Regulatory act	$M_1 \leq 2\ 500$ kg	$M_1 > 2\ 500$ kg	M_2	M_3
C8	Advanced emergency braking on heavy-duty vehicles	Regulation (EU) 2019/2144	not in scope	not in scope	n/a	n/a
C9	Advanced emergency braking on light-duty vehicles	Regulation (EU) 2019/2144	X	G	not in scope	not in scope
C10	Tyre safety and environmental performance	Regulation (EU) 2019/2144	X	G	G	G
C11	Spare wheels and run-flat systems (IF)	Regulation (EU) 2019/2144	X	X	not in scope	not in scope
C12	Retreaded tyres	Regulation (EU) 2019/2144	equipment	equipment	equipment	equipment
C13	Tyre pressure monitoring for light-duty vehicles	Regulation (EU) 2019/2144	X	G	not in scope	not in scope
C14	Tyre pressure monitoring for heavy-duty vehicles	Regulation (EU) 2019/2144	not in scope	not in scope	X	X
C15	Tyre installation	Regulation (EU) 2019/2144	X	G	G	G
C16	Replacement wheels	Regulation (EU) 2019/2144	equipment	equipment	equipment	equipment

▼M4

Item	Subject	Regulatory act	$M_1 \leq 2\ 500$ kg	$M_1 > 2\ 500$ kg	M_2	M_3
D	ON-BOARD INSTRUMENTS, ELECTRICAL SYSTEM, VEHICLE LIGHTING AND PROTECTION AGAINST UNAUTHORISED USE, INCLUDING CYBERATTACKS					
D1	Audible warning	Regulation (EU) 2019/2144	X	X	X	X
D2	Radio interference (electromagnetic compatibility)	Regulation (EU) 2019/2144	X	X	X	X
D3	Protection against unauthorised use, immobiliser and alarm systems	Regulation (EU) 2019/2144	X	G	IF G	IF G
D4	Protection of vehicle against cyberattacks	Regulation (EU) 2019/2144	X	X	X	X
D5	Speedometer	Regulation (EU) 2019/2144	X	X	X	X
D6	Odometer	Regulation (EU) 2019/2144	X	X	X	X
D7	Speed limitation devices	Regulation (EU) 2019/2144	not in scope	not in scope	X	X
D8	Intelligent speed assistance	Regulation (EU) 2019/2144	X	X	X	X

▼M4

Item	Subject	Regulatory act	$M_1 \leq 2\ 500$ kg	$M_1 > 2\ 500$ kg	M_2	M_3
D9	Identification of controls, tell-tales and indicators	Regulation (EU) 2019/2144	X	X	X	X
D10	Heating systems	Regulation (EU) 2019/2144	X	X	X	X
D11	Light signalling devices	Regulation (EU) 2019/2144	X	X	X	X
D12	Road illumination devices	Regulation (EU) 2019/2144	X	X	X	X
D13	Retro-reflective devices	Regulation (EU) 2019/2144	X	X	X	X
D14	Light sources	Regulation (EU) 2019/2144	X	X	X	X
D15	Installation of light signalling, road illumination and retro-reflective devices	Regulation (EU) 2019/2144	A Provided that all mandatory lighting devices are installed and that the geometric visibility is not affected	A + G for the cab A for the remaining part Provided that all mandatory lighting devices are installed and that the geometric visibility is not affected	A + G for the cab A for the remaining part Provided that all mandatory lighting devices are installed and that the geometric visibility is not affected	A + G for the cab A for the remaining part Provided that all mandatory lighting devices are installed and that the geometric visibility is not affected
D16	Emergency stop signal	Regulation (EU) 2019/2144	X	X	X Only for vehicles fitted with electronically controlled anti-lock braking system	X Only for vehicles fitted with electronically controlled anti-lock braking system
D17	Headlamp cleaners (IF)	Regulation (EU) 2019/2144	IF	IF	IF	IF
D18	Gear shift indicator	Regulation (EU) 2019/2144	G	G	not in scope	not in scope

▼M4

Item	Subject	Regulatory act	$M_1 \leq 2\ 500$ kg	$M_1 > 2\ 500$ kg	M_2	M_3
E	DRIVER AND SYSTEM BEHAVIOUR					
E1	Alcohol interlock installation facilitation	Regulation (EU) 2019/2144	X	X	X	X
E2	Driver drowsiness and attention warning	Regulation (EU) 2019/2144	X	X	X	X
▼M8 E3	Advanced driver distraction warning	Regulation (EU) 2019/2144	X Date for refusal to grant EU type- approval: 7 July 2026 Date for the prohibition of the registration of vehicles: 7 July 2028	X Date for refusal to grant EU type- approval: 7 July 2026 Date for the prohibition of the registration of vehicles: 7 July 2028	X Date for refusal to grant EU type- approval: 7 July 2026 Date for the prohibition of the registration of vehicles: 7 July 2028	X Date for refusal to grant EU type-approval: 7 July 2026 Date for the prohibition of the registration of vehicles: 7 July 2028
▼M4 E4	Driver availability monitoring system (in case of automated vehicles)	Regulation (EU) 2019/2144	IF	IF	not in scope	not in scope
E5	Event data recorder	Regulation (EU) 2019/2144	X	G	no requirement yet	no requirement yet
E6	Systems to replace driver's control (in case of automated vehicles)	Regulation (EU) 2019/2144	IF	IF	no requirement yet	no requirement yet

▼M4

Item	Subject	Regulatory act	$M_1 \leq 2\ 500$ kg	$M_1 > 2\ 500$ kg	M_2	M_3
E7	Systems to provide the vehicle with information on state of vehicle and surrounding area (in case of automated vehicles)	Regulation (EU) 2019/2144	IF	IF	no requirement yet	no requirement yet
E8	Platooning (IF)	Regulation (EU) 2019/2144	no requirement yet	no requirement yet	no requirement yet	no requirement yet
E9	Systems to provide safety information to other road users (in case of automated vehicles)	Regulation (EU) 2019/2144	no requirement yet	no requirement yet	no requirement yet	no requirement yet
F	GENERAL VEHICLE CONSTRUCTION AND FEATURES					
F1	Registration plate space	Regulation (EU) 2019/2144	X	X	X	X
F2	Reversing motion	Regulation (EU) 2019/2144	X	X	X	X

▼M4

Item	Subject	Regulatory act	$M_1 \leq 2\ 500$ kg	$M_1 > 2\ 500$ kg	M_2	M_3
F3	Door latches and hinges	Regulation (EU) 2019/2144	X Application limited to doors giving access to seats designated for normal use when the vehicle is used on a public road and where the distance between the R-point of the seat and the average plane of the door surface, measured perpendicular to the longitudinal medium plane of the vehicle, does not exceed 500 mm.	G Application limited to doors giving access to seats designated for normal use when the vehicle is used on a public road and where the distance between the R-point of the seat and the average plane of the door surface, measured perpendicular to the longitudinal medium plane of the vehicle, does not exceed 500 mm. Completed vehicles on the basis of a type-approved incomplete chassis-cowl configuration are exempted from the general and performance requirements.	not in scope	not in scope
F4	Door entry steps, handholds and running boards	Regulation (EU) 2019/2144	X	X	not in scope	not in scope
F5	External projections	Regulation (EU) 2019/2144	G for the cab A for the remaining part The requirements on the protrusion of open windows do not apply to the living compartment	G for the cab A for the remaining part The requirements on the protrusion of open windows do not apply to the living compartment	not in scope	not in scope
F6	External projections of commercial vehicle cabs	Regulation (EU) 2019/2144	not in scope	not in scope	not in scope	not in scope

▼M4

Item	Subject	Regulatory act	$M_1 \leq 2\ 500$ kg	$M_1 > 2\ 500$ kg	M_2	M_3
F7	Statutory plate and vehicle identification number	Regulation (EU) 2019/2144	X	X	X	X
F8	Towing devices	Regulation (EU) 2019/2144	X Required for the front only, to be tested if fitted at the rear	X Required for the front only, to be tested if fitted at the rear	X Required for the front only, to be tested if fitted at the rear	X Required for the front only, to be tested if fitted at the rear
F9	Wheel guards	Regulation (EU) 2019/2144	G	G	not in scope	not in scope
F10	Spray suppression systems	Regulation (EU) 2019/2144	not in scope	not in scope	not in scope	not in scope
F11	Masses and dimensions	Regulation (EU) 2019/2144	X	X	X	X
F12	Mechanical couplings	Regulation (EU) 2019/2144	IF X	IF G	IF G	IF G
F13	Vehicles intended for the transportation of dangerous goods (IF)	Regulation (EU) 2019/2144	not in scope	not in scope	not in scope	not in scope
F14	General bus construction	Regulation (EU) 2019/2144	not in scope	not in scope	A	A
F15	Bus strength of superstructure	Regulation (EU) 2019/2144	not in scope	not in scope	A	A
F16	Flammability in buses	Regulation (EU) 2019/2144	not in scope	not in scope	not in scope	G for the cab X for the remaining part

▼M4

Item	Subject	Regulatory act	$M_1 \leq 2\ 500$ kg	$M_1 > 2\ 500$ kg	M_2	M_3
▼M8						
G	ENVIRONMENTAL PERFORMANCE AND EMISSIONS for 'Euro 6' vehicles, for 'Euro VI' vehicles and separate technical units and components (*1)					
▼M4						
G1	Sound level	Regulation (EU) No 540/2014	X Modification of exhaust system length after the last silencer not exceeding 2,0 m is permissible without any further test.	G Modification of exhaust system length after the last silencer not exceeding 2,0 m is permissible without any further test.	G Modification of exhaust system length after the last silencer not exceeding 2,0 m is permissible without any further test.	G Modification of exhaust system length after the last silencer not exceeding 2,0 m is permissible without any further test.
G2	Tailpipe emissions of vehicle in lab	Regulation (EC) No 715/2007	G Modification of exhaust system length after the last silencer not exceeding 2,0 m is permissible without any further test. In the case of ambulances, an EU type-approval granted to the most representative base vehicle remains valid irrespective of a change in the reference weight. Motor-caravans and hearses: In the case of conversion of a vehicle (e.g. in a multi-stage type-approval process), the manufacturer responsible for the conversion needs to consult the original (complete or incomplete) vehicle manufacturer to get confirmation that the converted vehicle is covered by the emission approval of the original (complete or incomplete) vehicle. It is allowed for the reference mass of the converted vehicle to exceed 2 840 kg.	G Modification of exhaust system length after the last silencer not exceeding 2,0 m is permissible without any further test. In the case of ambulances, an EU type-approval granted to the most representative base vehicle remains valid irrespective of a change in the reference weight. Motor-caravans and hearses: In the case of conversion of a vehicle (e.g. in a multi-stage type-approval process), the manufacturer responsible for the conversion needs to consult the original (complete or incomplete) vehicle manufacturer to get confirmation that the converted vehicle is covered by the emission approval of the original (complete or incomplete) vehicle. It is allowed for the reference mass of the converted vehicle to exceed 2 840 kg.	G Modification of exhaust system length after the last silencer not exceeding 2,0 m is permissible without any further test. In the case of ambulances, an EU type-approval granted to the most representative base vehicle remains valid irrespective of a change in the reference weight. Motor-caravans and hearses: In the case of conversion of a vehicle (e.g. in a multi-stage type-approval process), the manufacturer responsible for the conversion needs to consult the original (complete or incomplete) vehicle manufacturer to get confirmation that the converted vehicle is covered by the emission approval of the original (complete or incomplete) vehicle. It is allowed for the reference mass of the converted vehicle to exceed 2 840 kg.	not in scope

▼M4

Item	Subject	Regulatory act	$M_1 \leq 2\ 500$ kg	$M_1 > 2\ 500$ kg	M_2	M_3
G2a	Determination of specific CO_2 emissions and fuel consumption of vehicle and device for monitoring on board the vehicle the consumption of fuel and/or electric energy	Regulation (EC) No 715/2007	G In the case of multi-stage type-approval, the new CO_2 value shall be calculated in accordance with the CO_2 interpolation method, using the relevant data from the completed vehicle. Alternatively, the new CO_2 value shall be calculated on the basis of the parameters of the completed vehicle as specified in paragraph 3.2.4 of Annex B7 to UN Regulation 154 and using the road load matrix tool supplied by the manufacturer of the base vehicle. If the tool is not available or CO_2 interpolation is impractical, the CO_2 value of Vehicle High from the base vehicle shall be used, at the request of the manufacturer responsible for the conversion, and with the agreement of the approval authority.	G In the case of multi-stage type-approval, the new CO_2 value shall be calculated in accordance with the CO_2 interpolation method, using the relevant data from the completed vehicle. Alternatively, the new CO_2 value shall be calculated on the basis of the parameters of the completed vehicle as specified in paragraph 3.2.4 of Annex B7 to UN Regulation 154 and using the road load matrix tool supplied by the manufacturer of the base vehicle. If the tool is not available or CO_2 interpolation is impractical, the CO_2 value of Vehicle High from the base vehicle shall be used, at the request of the manufacturer responsible for the conversion, and with the agreement of the approval authority.	G In the case of multi-stage type-approval, the new CO_2 value shall be calculated in accordance with the CO_2 interpolation method, using the relevant data from the completed vehicle. Alternatively, the new CO_2 value shall be calculated on the basis of the parameters of the completed vehicle as specified in paragraph 3.2.4 of Annex B7 to UN Regulation 154 and using the road load matrix tool supplied by the manufacturer of the base vehicle. If the tool is not available or CO_2 interpolation is impractical, the CO_2 value of Vehicle High from the base vehicle shall be used, at the request of the manufacturer responsible for the conversion, and with the agreement of the approval authority.	Not in scope
G3	Tailpipe emissions of engine in lab	Regulation (EC) No 595/2009	not in scope	G Modification of exhaust system length after the last silencer not exceeding 2,0 m is permissible without any further test.	G Modification of exhaust system length after the last silencer not exceeding 2,0 m is permissible without any further test.	G Modification of exhaust system length after the last silencer not exceeding 2,0 m is permissible without any further test.
G3a	Determination of specific CO_2 emissions and fuel consumption of vehicle	Regulation (EC) No 595/2009	Not in scope	Not in scope	Not in scope	Not in scope

▼M4

Item	Subject	Regulatory act	$M_1 \leq 2\ 500$ kg	$M_1 > 2\ 500$ kg	M_2	M_3
G3b	Determination of specific energy efficiency performance of trailer	Regulation (EC) No 595/2009	Not in scope	Not in scope	Not in scope	Not in scope
G4	Tailipipe emissions on the road	Regulation (EC) No 715/2007 Regulation (EC) No 595/2009	G Modification of exhaust system length after the last silencer not exceeding 2,0 m is permissible without any further test. In the case of ambulances, an EU type-approval granted to the most representative base vehicle remains valid irrespective of a change in the reference weight. Motor-caravans and hearses: In the case of conversion of a vehicle (e.g. in a multi-stage type-approval process), the manufacturer responsible for the conversion needs to consult the original (complete or incomplete) vehicle manufacturer to get confirmation that the converted vehicle is covered by the emission approval of the original (complete or incomplete) vehicle. It is allowed for the reference mass of the converted vehicle to exceed 2 840 kg.	G Modification of exhaust system length after the last silencer not exceeding 2,0 m is permissible without any further test. In the case of ambulances, an EU type-approval granted to the most representative base vehicle remains valid irrespective of a change in the reference weight. Motor-caravans and hearses: In the case of conversion of a vehicle (e.g. in a multi-stage type-approval process), the manufacturer responsible for the conversion needs to consult the original (complete or incomplete) vehicle manufacturer to get confirmation that the converted vehicle is covered by the emission approval of the original (complete or incomplete) vehicle. It is allowed for the reference mass of the converted vehicle to exceed 2 840 kg.	G	G

▼M4

Item	Subject	Regulatory act	$M_1 \leq 2\ 500$ kg	$M_1 > 2\ 500$ kg	M_2	M_3
G5	Durability of tailpipe emissions	Regulation (EC) No 715/2007 Regulation (EC) No 595/2009	G	G	G	G
G6	Crankcase emissions	Regulation (EC) No 715/2007 Regulation (EC) No 595/2009	G	G	G	G
G7	Evaporative emissions	Regulation (EC) No 715/2007	G	G	G	not in scope
G8	Low-temperature-tailpipe emissions in lab	Regulation (EC) No 715/2007	G	G	G	not in scope
G9	On-board diagnostics	Regulation (EC) No 715/2007 Regulation (EC) No 595/2009	G	G	G	G
G10	Absence of defeat device	Regulation (EC) No 715/2007 Regulation (EC) No 595/2009	G	G	G	G
G11	Auxiliary emissions strategies	Regulation (EC) No 715/2007 Regulation (EC) No 595/2009	G	G	G	G

▼M4

Item	Subject	Regulatory act	$M_1 \leq 2\ 500$ kg	$M_1 > 2\ 500$ kg	M_2	M_3
G12	Anti-tampering	Regulation (EC) No 715/2007 Regulation (EC) No 595/2009	G	G	G	G
G13	Recyclability	Directive 2005/64/EC	n/a However, Annex V on prohibition of reuse of the specified component parts shall apply.	n/a However, Annex V on prohibition of reuse of the specified component parts shall apply.	not in scope	not in scope
G14	Air-conditioning systems	Directive 2006/40/EC	G	G	not in scope	not in scope
▼M8 G16	Measurement of engine power	Regulation (EC) No 715/2007 Regulation (EC) No 595/2009	G	G	G	G
G17	Operation of systems using consumable reagent and pollution control systems	Regulation (EC) No 715/2007 Regulation (EC) No 595/2009	G	G	G	G
GA	ENVIRONMENTAL PERFORMANCE AND EMISSIONS for 'Euro 7' and 'Euro 7ext' vehicles, separate technical units and components (*2)					
GA1	Sound level	Regulation (EU) No 540/2014	X Modification of exhaust system length after the last silencer not exceeding 2,0 m is permissible without any further test.	G Modification of exhaust system length after the last silencer not exceeding 2,0 m is permissible without any further test.	G Modification of exhaust system length after the last silencer not exceeding 2,0 m is permissible without any further test.	G Modification of exhaust system length after the last silencer not exceeding 2,0 m is permissible without any further test.

▼M8

Item	Subject	Regulatory act	$M_1 \leq 2\ 500$ kg	$M_1 > 2\ 500$ kg	M_2	M_3
GA2	Tailpipe emissions of vehicle in lab	Regulation (EU) 2024/1257 Commission Implementing Regulation (EU) 2025/1706	G Modification of exhaust system length after the last silencer not exceeding 2,0 m is permissible without any further test. In the case of ambulances, an EU type-approval granted to the most representative base vehicle remains valid irrespective of a change in the reference weight. Motor-caravans and hearses: In the case of conversion of a vehicle (e.g. in a multi-stage type-approval process), the manufacturer responsible for the conversion needs to consult the original (complete or incomplete) vehicle manufacturer to get confirmation that the converted vehicle is covered by the emission approval of the original (complete or incomplete) vehicle.	G Modification of exhaust system length after the last silencer not exceeding 2,0 m is permissible without any further test. In the case of ambulances, an EU type-approval granted to the most representative base vehicle remains valid irrespective of a change in the reference weight. Motor-caravans and hearses: In the case of conversion of a vehicle (e.g. in a multi-stage type-approval process), the manufacturer responsible for the conversion needs to consult the original (complete or incomplete) vehicle manufacturer to get confirmation that the converted vehicle is covered by the emission approval of the original (complete or incomplete) vehicle.		
GA2a	Determination of specific CO_2 emissions and fuel consumption of vehicle and device for monitoring on board the vehicle the consumption of fuel and/or electric energy	Regulation (EU) 2024/1257 Commission Implementing Regulation (EU) 2025/1706	G In the case of multi-stage type-approval, the new CO_2 value shall be calculated in accordance with the CO_2 interpolation method, using the relevant data from the completed vehicle. Alternatively, the new CO_2 value shall be calculated on the basis of the parameters of the completed vehicle as specified in paragraph 3.2.4 of Annex B7 to UN Regulation 154 and using the road load matrix tool supplied by the manufacturer	G In the case of multi-stage type-approval, the new CO_2 value shall be calculated in accordance with the CO_2 interpolation method, using the relevant data from the completed vehicle. Alternatively, the new CO_2 value shall be calculated on the basis of the parameters of the completed vehicle as specified in paragraph 3.2.4 of Annex B7 to UN Regulation 154 and using the road load matrix tool supplied by the manufacturer of the base vehicle. If the tool is not available or CO_2 interpolation is impractical, the CO_2 value of Vehicle High from the base		not in scope

▼M8

Item	Subject	Regulatory act	$M_1 \leq 2\ 500$ kg	$M_1 > 2\ 500$ kg	M_2	M_3
			of the base vehicle. If the tool is not available or CO_2 interpolation is impractical, the CO_2 value of Vehicle High from the base vehicle shall be used, at the request of the manufacturer responsible for the conversion, and with the agreement of the approval authority.	vehicle shall be used, at the request of the manufacturer responsible for the conversion, and with the agreement of the approval authority.		
GA4	Tailpipe emissions on the road	Regulation (EU) 2024/1257 Commission Implementing Regulation (EU) 2025/1706	G Modification of exhaust system length after the last silencer not exceeding 2,0 m is permissible without any further test. In the case of ambulances, an EU type-approval granted to the most representative base vehicle remains valid irrespective of a change in the reference weight. Motor-caravans and hearses: In the case of conversion of a vehicle (e.g. in a multi-stage type-approval process), the manufacturer responsible for the conversion needs to consult the original (complete or incomplete) vehicle manufacturer to get confirmation that the converted vehicle is covered by the emission approval of the original (complete or incomplete) vehicle.	G Modification of exhaust system length after the last silencer not exceeding 2,0 m is permissible without any further test. In the case of ambulances, an EU type-approval granted to the most representative base vehicle remains valid irrespective of a change in the reference weight. Motor-caravans and hearses: In the case of conversion of a vehicle (e.g. in a multi-stage type-approval process), the manufacturer responsible for the conversion needs to consult the original (complete or incomplete) vehicle manufacturer to get confirmation that the converted vehicle is covered by the emission approval of the original (complete or incomplete) vehicle.		

▼M8

Item	Subject	Regulatory act	$M_1 \leq 2\ 500$ kg	$M_1 > 2\ 500$ kg	M_2	M_3
GA5	Durability of tailpipe emissions	Regulation (EU) 2024/1257 Commission Implementing Regulation (EU) 2025/1706	G	G		
GA6	Crankcase emissions	Regulation (EU) 2024/1257 Commission Implementing Regulation (EU) 2025/1706	G	G		
GA7	Evaporative emissions	Regulation (EU) 2024/1257 Commission Implementing Regulation (EU) 2025/1706	G	G	not in scope	not in scope
GA8	Low-temperature tailpipe emissions in lab	Regulation (EU) 2024/1257 Commission Implementing Regulation (EU) 2025/1706	G	G	not in scope	not in scope
GA9	On-board diagnostics	Regulation (EU) 2024/1257 Commission Implementing Regulation (EU) 2025/1706	G	G		
GA10	Absence of manipulation devices and strategies	Regulation (EU) 2024/1257 Commission Implementing Regulation (EU) 2025/1706 Commission Implementing Regulation (EU) 2025/1707	G	G		

▼M8

Item	Subject	Regulatory act	$M_1 \leq 2\ 500$ kg	$M_1 > 2\ 500$ kg	M_2	M_3
GA11	Auxiliary emissions strategies	Regulation (EU) 2024/1257 Commission Implementing Regulation (EU) 2025/1706	G	G		
GA12	Anti-tampering, security and cybersecurity	Regulation (EU) 2024/1257 Commission Implementing Regulation (EU) 2025/1706	G	G		
GA13	Recyclability	Directive 2005/64/EC	n/a However, Annex V on prohibition of reuse of the specified component parts shall apply.	n/a However, Annex V on prohibition of reuse of the specified component parts shall apply.	not in scope	not in scope
GA14	Air-conditioning systems	Directive 2006/40/EC	G	G	not in scope	not in scope
GA16	Measurement of engine power	Regulation (EU) 2024/1257 Commission Implementing Regulation (EU) 2025/1706	G	G		
GA17	Operation of systems using consumable reagent and pollution control systems	Regulation (EU) 2024/1257 Commission Implementing Regulation (EU) 2025/1706	G	G		

▼M8

Item	Subject	Regulatory act	$M_1 \leq 2\ 500$ kg	$M_1 > 2\ 500$ kg	M_2	M_3
GA18	On-board monitoring (OBM), in-vehicle display of environmental data and environmental vehicle passport	Regulation (EU) 2024/1257 Commission Implementing Regulation (EU) 2025/1707	G	G		
▼M4 H	ACCESS TO VEHICLE INFORMATION AND SOFTWARE UPDATE					
H1	Access to vehicle OBD information and vehicle repair and maintenance information	Regulation (EU) 2018/858, Articles 61 to 66 and Annex X	X	X	X	X
H2	Software update	Regulation (EU) 2018/858 UN Regulation No 156	X	X	X	X

(*1) For light-duty vehicles in accordance with Regulation (EC) No 715/2007 (Euro 6 vehicles) or heavy-duty vehicles in accordance with Regulation (EC) No 595/2009 (Euro VI vehicles), compliance with items G2 to G12, G16 and G17 is mandatory, however, only a single vehicle emissions type-approval either under Regulation (EC) No 715/2007 or under Regulation (EC) No 595/2009 is foreseen depending on the scope.

(*2) For vehicles in accordance with Regulation (EU) 2024/1257 (Euro 7 or Euro 7ext vehicles), a collection of type-approvals and/or declarations of compliance is necessary as set out in the implementing legislation refered to in items GA2 to GA18 (excluding items GA13 and GA14). Requirements for Euro 7ext vehicles are those indicated in the column for N1 category vehicles.

▼M4

Appendix 2

Armoured vehicles

Item	Subject	Regulatory act	M_1	M_2	M_3	N_1	N_2	N_3	O_1	O_2	O_3	O_4
A	RESTRAINT SYSTEMS, CRASH TESTING, FUEL SYSTEM INTEGRITY AND HIGH VOLTAGE ELECTRICAL SAFETY											
A1	Interior fittings	Regulation (EU) 2019/2144	A	not in scope	not in scope	not in scope	not in scope	not in scope	not in scope	not in scope	not in scope	not in scope
A2	Seats and head restraints	Regulation (EU) 2019/2144	X Application limited to seats designated for normal use when the vehicle is used on a public road. Seats that are not designated as such shall be clearly and permanently identified to users, either by means of a pictogram or a sign with an appropriate text.	X Application limited to seats designated for normal use when the vehicle is used on a public road. Seats that are not designated as such shall be clearly and permanently identified to users, either by means of a pictogram or a sign with an appropriate text.	X Application limited to seats designated for normal use when the vehicle is used on a public road. Seats that are not designated as such shall be clearly and permanently identified to users, either by means of a pictogram or a sign with an appropriate text.	X Application limited to seats designated for normal use when the vehicle is used on a public road. Seats that are not designated as such shall be clearly and permanently identified to users, either by means of a pictogram or a sign with an appropriate text.	X Application limited to seats designated for normal use when the vehicle is used on a public road. Seats that are not designated as such shall be clearly and permanently identified to users, either by means of a pictogram or a sign with an appropriate text.	X Application limited to seats designated for normal use when the vehicle is used on a public road. Seats that are not designated as such shall be clearly and permanently identified to users, either by means of a pictogram or a sign with an appropriate text.	not in scope	not in scope	not in scope	not in scope

▼M4

Item	Subject	Regulatory act	M_1	M_2	M_3	N_1	N_2	N_3	O_1	O_2	O_3	O_4
A3	Bus seats	Regulation (EU) 2019/2144	not in scope	X Application limited to seats designated for normal use when the vehicle is used on a public road. Seats that are not designated as such shall be clearly and permanently identified to users, either by means of a pictogram or a sign with an appropriate text.	X Application limited to seats designated for normal use when the vehicle is used on a public road. Seats that are not designated as such shall be clearly and permanently identified to users, either by means of a pictogram or a sign with an appropriate text.	not in scope	not in scope	not in scope	not in scope	not in scope	not in scope	not in scope
A4	Safety-belt anchorages	Regulation (EU) 2019/2144	A	A	A	A	A	A	not in scope	not in scope	not in scope	not in scope
A5	Safety-belts and restraint systems	Regulation (EU) 2019/2144	A	A	A	A	A	A	not in scope	not in scope	not in scope	not in scope

▼M4

Item	Subject	Regulatory act	M_1	M_2	M_3	N_1	N_2	N_3	O_1	O_2	O_3	O_4
A6	Safety-belt reminders	Regulation (EU) 2019/2144	A	A	A	A	A	A	not in scope	not in scope	not in scope	not in scope
A7	Partitioning systems	Regulation (EU) 2019/2144	equipment	equipment	equipment	equipment	equipment	equipment	equipment	equipment	equipment	equipment
A8	Child restraint anchorages	Regulation (EU) 2019/2144	A	IF	IF	IF	IF	IF	not in scope	not in scope	not in scope	not in scope
A9	Child restraint systems (IF)	Regulation (EU) 2019/2144	equipment	equipment	equipment	equipment	equipment	equipment	equipment	equipment	equipment	equipment
A10	Enhanced child restraint systems (IF)	Regulation (EU) 2019/2144	equipment	equipment	equipment	equipment	equipment	equipment	equipment	equipment	equipment	equipment
A11	Front underrun protection	Regulation (EU) 2019/2144	not in scope	not in scope	not in scope	not in scope	X	X	not in scope	not in scope	not in scope	not in scope
A12	Rear underrun protection	Regulation (EU) 2019/2144	X	X	X	X	A	A	X	X	X	X
A13	Lateral protection	Regulation (EU) 2019/2144	not in scope	not in scope	not in scope	not in scope	X	X	not in scope	not in scope	X	X

▼M4

Item	Subject	Regulatory act	M_1	M_2	M_3	N_1	N_2	N_3	O_1	O_2	O_3	O_4
A14	Fuel tank safety (IF)	Regulation (EU) 2019/2144	X	X	X	X	X	X	X	X	X	X
A15	Liquified petroleum gas safety (IF)	Regulation (EU) 2019/2144	A	A	A	A	A	A	not in scope	not in scope	not in scope	not in scope
A16	Compressed and liquified natural gas safety (IF)	Regulation (EU) 2019/2144	A	A	A	A	A	A	not in scope	not in scope	not in scope	not in scope
A17	Hydrogen safety (IF)	Regulation (EU) 2019/2144	A	A	A	A	A	A	not in scope	not in scope	not in scope	not in scope
A18	Hydrogen system material qualification (IF)	Regulation (EU) 2019/2144	X	X	X	X	X	X	not in scope	not in scope	not in scope	not in scope
A19	In-use electric safety (IF)	Regulation (EU) 2019/2144	X	X	X	X	X	X	not in scope	not in scope	not in scope	not in scope
A20	Frontal off-set impact	Regulation (EU) 2019/2144	n/a	not in scope	not in scope	n/a	not in scope	not in scope	not in scope	not in scope	not in scope	not in scope

▼M4

Item	Subject	Regulatory act	M_1	M_2	M_3	N_1	N_2	N_3	O_1	O_2	O_3	O_4
A21	Frontal full-width impact	Regulation (EU) 2019/2144	n/a	not in scope	not in scope	n/a	not in scope	not in scope	not in scope	not in scope	not in scope	not in scope
A22	Protective steering	Regulation (EU) 2019/2144	n/a	not in scope	not in scope	n/a	not in scope	not in scope	not in scope	not in scope	not in scope	not in scope
A23	Replacement airbag	Regulation (EU) 2019/2144	equipment	equipment	equipment	equipment	equipment	equipment	equipment	equipment	equipment	equipment
A24	Cab impact	Regulation (EU) 2019/2144	not in scope	not in scope	not in scope	n/a	n/a	n/a	not in scope	not in scope	not in scope	not in scope
A25	Side impact	Regulation (EU) 2019/2144	n/a	not in scope	not in scope	n/a	not in scope	not in scope	not in scope	not in scope	not in scope	not in scope
A26	Pole side impact	Regulation (EU) 2019/2144	n/a	not in scope	not in scope	n/a	not in scope	not in scope	not in scope	not in scope	not in scope	not in scope
A27	Rear impact	Regulation (EU) 2019/2144	n/a	not in scope	not in scope	n/a	not in scope	not in scope	not in scope	not in scope	not in scope	not in scope
A28	112-based eCall in-vehicles systems	Regulation (EU) 2015/758	G	not in scope	not in scope	G	not in scope	not in scope	not in scope	not in scope	not in scope	not in scope

▼M4

Item	Subject	Regulatory act	M_1	M_2	M_3	N_1	N_2	N_3	O_1	O_2	O_3	O_4
B	VULNERABLE ROAD USERS, VISION AND VISIBILITY											
B1	Pedestrian leg and head protection	Regulation (EU) 2019/2144	n/a	not in scope	not in scope	n/a	not in scope	not in scope	not in scope	not in scope	not in scope	not in scope
B2	Enlarged head impact zone	Regulation (EU) 2019/2144	n/a	not in scope	not in scope	n/a	not in scope	not in scope	not in scope	not in scope	not in scope	not in scope
B3	Frontal protection system	Regulation (EU) 2019/2144	equipment	equipment	equipment	equipment	equipment	equipment	equipment	equipment	equipment	equipment
B4	Advanced emergency braking for pedestrians and cyclists ahead	Regulation (EU) 2019/2144	n/a	not in scope	not in scope	n/a	not in scope	not in scope	not in scope	not in scope	not in scope	not in scope
B5	Pedestrian and cyclist collision warning	Regulation (EU) 2019/2144	not in scope	A May be partly exempted if the necessary devices cannot be placed in the optimal position as to prevent them from being damaged, which prevents full compliance with the requirements and may be fully exempted	A May be partly exempted if the necessary devices cannot be placed in the optimal position as to prevent them from being damaged, which prevents full compliance with the requirements and may be fully exempted	not in scope	A May be partly exempted if the necessary devices cannot be placed in the optimal position as to prevent them from being damaged, which prevents full compliance with the requirements and may be fully exempted	A May be partly exempted if the necessary devices cannot be placed in the optimal position as to prevent them from being damaged, which prevents full compliance with the requirements and may be fully exempted	not in scope	not in scope	not in scope	not in scope

▼M4

Item	Subject	Regulatory act	M_1	M_2	M_3	N_1	N_2	N_3	O_1	O_2	O_3	O_4
				if it is impossible to meet these requirements	if it is impossible to meet these requirements		if it is impossible to meet these requirements	if it is impossible to meet these requirements				
B6	Blind spot information system	Regulation (EU) 2019/2144	not in scope	A May be partly exempted if the necessary devices cannot be placed in the optimal position as to prevent them from being damaged, which prevents full compliance with the requirements and may be fully exempted if it is impossible to meet these requirements	A May be partly exempted if the necessary devices cannot be placed in the optimal position as to prevent them from being damaged, which prevents full compliance with the requirements and may be fully exempted if it is impossible to meet these requirements	not in scope	A May be partly exempted if the necessary devices cannot be placed in the optimal position as to prevent them from being damaged, which prevents full compliance with the requirements and may be fully exempted if it is impossible to meet these requirements	A May be partly exempted if the necessary devices cannot be placed in the optimal position as to prevent them from being damaged, which prevents full compliance with the requirements and may be fully exempted if it is impossible to meet these requirements	not in scope	not in scope	not in scope	not in scope

▼M4

Item	Subject	Regulatory act	M_1	M_2	M_3	N_1	N_2	N_3	O_1	O_2	O_3	O_4
B7	Reversing detection	Regulation (EU) 2019/2144	A May be partly exempted if the necessary devices cannot be placed in the optimal position as to prevent them from being damaged, which prevents full compliance with the requirements and may be fully exempted if it is impossible to meet these requirements	A May be partly exempted if the necessary devices cannot be placed in the optimal position as to prevent them from being damaged, which prevents full compliance with the requirements and may be fully exempted if it is impossible to meet these requirements	A May be partly exempted if the necessary devices cannot be placed in the optimal position as to prevent them from being damaged, which prevents full compliance with the requirements and may be fully exempted if it is impossible to meet these requirements	A May be partly exempted if the necessary devices cannot be placed in the optimal position as to prevent them from being damaged, which prevents full compliance with the requirements and may be fully exempted if it is impossible to meet these requirements	A May be partly exempted if the necessary devices cannot be placed in the optimal position as to prevent them from being damaged, which prevents full compliance with the requirements and may be fully exempted if it is impossible to meet these requirements	A May be partly exempted if the necessary devices cannot be placed in the optimal position as to prevent them from being damaged, which prevents full compliance with the requirements and may be fully exempted if it is impossible to meet these requirements	not in scope	not in scope	not in scope	not in scope
B8	Forward vision	Regulation (EU) 2019/2144	G The light transmission factor is at least 60 % and the 'A' pillar obstruction angle is not more than 10 degrees.	not in scope	not in scope	G The light transmission factor is at least 60 % and the 'A' pillar obstruction angle is not more than 10 degrees.	not in scope	not in scope	not in scope	not in scope	not in scope	not in scope

▼M4

Item	Subject	Regulatory act	M_1	M_2	M_3	N_1	N_2	N_3	O_1	O_2	O_3	O_4
B9	Heavy-duty vehicles direct vision	Regulation (EU) 2019/2144	not in scope	no requirements yet	no requirements yet	not in scope	no requirements yet	no requirements yet	not in scope	not in scope	not in scope	not in scope
B10	Safety glazing	Regulation (EU) 2019/2144	n/a	n/a	n/a	n/a	n/a	n/a	n/a	n/a	n/a	n/a
B11	Defrost/demist	Regulation (EU) 2019/2144	A	X Vehicles shall be fitted with an adequate windscreen defrosting and demisting device	X Vehicles shall be fitted with an adequate windscreen defrosting and demisting device	X Vehicles shall be fitted with an adequate windscreen defrosting and demisting device	X Vehicles shall be fitted with an adequate windscreen defrosting and demisting device	X Vehicles shall be fitted with an adequate windscreen defrosting and demisting device	not in scope	not in scope	not in scope	not in scope
B12	Wash/wipe	Regulation (EU) 2019/2144	A	X Vehicles shall be fitted with adequate wind-screen washing and wiping devices	X Vehicles shall be fitted with adequate wind-screen washing and wiping devices	X Vehicles shall be fitted with adequate wind-screen washing and wiping devices	X Vehicles shall be fitted with adequate wind-screen washing and wiping devices	X Vehicles shall be fitted with adequate wind-screen washing and wiping devices	not in scope	not in scope	not in scope	not in scope
B13	Indirect vision devices	Regulation (EU) 2019/2144	A	A	A	A	A	A	not in scope	not in scope	not in scope	not in scope
B14	Acoustic Vehicle Alerting Systems	Regulation (EU) No 540/2014	X	X	X	X	X	X	not in scope	not in scope	not in scope	not in scope

▼M4

Item	Subject	Regulatory act	M_1	M_2	M_3	N_1	N_2	N_3	O_1	O_2	O_3	O_4
C	VEHICLE CHASSIS, BRAKING, TYRES AND STEERING											
C1	Steering equipment	Regulation (EU) 2019/2144	X	X	X	X	X	X	X	X	X	X
C2	Lane departure warning	Regulation (EU) 2019/2144	not in scope	n/a	n/a	not in scope	n/a	n/a	not in scope	not in scope	not in scope	not in scope
C3	Emergency lane keeping	Regulation (EU) 2019/2144	n/a	not in scope	not in scope	n/a	not in scope	not in scope	not in scope	not in scope	not in scope	not in scope
C4	Braking	Regulation (EU) 2019/2144	G	G	G	G	G	G	X	X	X	X
C5	Replacement braking parts	Regulation (EU) 2019/2144	equipment	equipment	equipment	equipment	equipment	equipment	equipment	equipment	equipment	equipment
C6	Brake assist	Regulation (EU) 2019/2144	n/a	not in scope	not in scope	n/a	not in scope	not in scope	not in scope	not in scope	not in scope	not in scope
C7	Stability control	Regulation (EU) 2019/2144	X	n/a	n/a	X	n/a	n/a	not in scope	not in scope	X	X

▼M4

Item	Subject	Regulatory act	M_1	M_2	M_3	N_1	N_2	N_3	O_1	O_2	O_3	O_4
C8	Advanced emergency braking on heavy-duty vehicles	Regulation (EU) 2019/2144	not in scope	n/a	n/a	not in scope	n/a	n/a	not in scope	not in scope	not in scope	not in scope
C9	Advanced emergency braking on light-duty vehicles	Regulation (EU) 2019/2144	n/a	not in scope	not in scope	n/a	not in scope	not in scope	not in scope	not in scope	not in scope	not in scope
C10	Tyre safety and environmental performance	Regulation (EU) 2019/2144	A	A	A	A	A	A	A	A	A	A
C11	Spare wheels and run-flat systems (IF)	Regulation (EU) 2019/2144	A	not in scope	not in scope	A	not in scope	not in scope	not in scope	not in scope	not in scope	not in scope
C12	Retreaded tyres	Regulation (EU) 2019/2144	equipment	equipment	equipment	equipment	equipment	equipment	equipment	equipment	equipment	equipment
C13	Tyre pressure monitoring for light-duty vehicles	Regulation (EU) 2019/2144	n/a	not in scope	not in scope	n/a	not in scope	not in scope	not in scope	not in scope	not in scope	not in scope

▼M4

Item	Subject	Regulatory act	M_1	M_2	M_3	N_1	N_2	N_3	O_1	O_2	O_3	O_4
C14	Tyre pressure monitoring for heavy-duty vehicles	Regulation (EU) 2019/2144	not in scope	n/a	n/a	not in scope	n/a	n/a	not in scope	not in scope	n/a	n/a
C15	Tyre installation	Regulation (EU) 2019/2144	A	A	A	A	A	A	A	A	A	A
C16	Replacement wheels	Regulation (EU) 2019/2144	equipment	equipment	equipment	equipment	equipment	equipment	equipment	equipment	equipment	equipment
D	ON-BOARD INSTRUMENTS, ELECTRICAL SYSTEM, VEHICLE LIGHTING AND PROTECTION AGAINST UNAUTHORISED USE, INCLUDING CYBERATTACKS											
D1	Audible warning	Regulation (EU) 2019/2144	A Additional panic alarm devices are permitted	A Additional panic alarm devices are permitted	A Additional panic alarm devices are permitted	A Additional panic alarm devices are permitted	A Additional panic alarm devices are permitted	A Additional panic alarm devices are permitted	not in scope	not in scope	not in scope	not in scope
D2	Radio interference (electromagnetic compatibility)	Regulation (EU) 2019/2144	X	X	X	X	X	X	X	X	X	X
D3	Protection against unauthorised use, immobiliser and alarm systems	Regulation (EU) 2019/2144	X	IF G	IF G	X	IF G	IF G	not in scope	not in scope	not in scope	not in scope

▼M4

Item	Subject	Regulatory act	M_1	M_2	M_3	N_1	N_2	N_3	O_1	O_2	O_3	O_4
D4	Protection of vehicle against cyberattacks	Regulation (EU) 2019/2144	X	X	X	X	X	X	not in scope	not in scope	not in scope	not in scope
D5	Speedometer	Regulation (EU) 2019/2144	X	X	X	X	X	X	not in scope	not in scope	not in scope	not in scope
D6	Odometer	Regulation (EU) 2019/2144	X	X	X	X	X	X	not in scope	not in scope	not in scope	not in scope
D7	Speed limitation devices	Regulation (EU) 2019/2144	not in scope	X	X	not in scope	X	X	not in scope	not in scope	not in scope	not in scope
D8	Intelligent speed assistance	Regulation (EU) 2019/2144	n/a	n/a	n/a	n/a	n/a	n/a	not in scope	not in scope	not in scope	not in scope
D9	Identification of controls, tell-tales and indicators	Regulation (EU) 2019/2144	X	X	X	X	X	X	not in scope	not in scope	not in scope	not in scope
D10	Heating systems	Regulation (EU) 2019/2144	X	X	X	X	X	X	X	X	X	X

▼M4

Item	Subject	Regulatory act	M_1	M_2	M_3	N_1	N_2	N_3	O_1	O_2	O_3	O_4
D11	Light signalling devices	Regulation (EU) 2019/2144	X	X	X	X	X	X	X	X	X	X
D12	Road illumination devices	Regulation (EU) 2019/2144	X	X	X	X	X	X	X	X	X	X
D13	Retro-reflective devices	Regulation (EU) 2019/2144	X	X	X	X	X	X	X	X	X	X
D14	Light sources	Regulation (EU) 2019/2144	X	X	X	X	X	X	X	X	X	X
D15	Installation of light signalling, road illumination and retro-reflective devices	Regulation (EU) 2019/2144	A Provided that all mandatory lighting devices are installed and that the geometric visibility is not affected	A Provided that all mandatory lighting devices are installed and that the geometric visibility is not affected	A Provided that all mandatory lighting devices are installed and that the geometric visibility is not affected	A Provided that all mandatory lighting devices are installed and that the geometric visibility is not affected	A Provided that all mandatory lighting devices are installed and that the geometric visibility is not affected	A Provided that all mandatory lighting devices are installed and that the geometric visibility is not affected	A Provided that all mandatory lighting devices are installed and that the geometric visibility is not affected	A Provided that all mandatory lighting devices are installed and that the geometric visibility is not affected	A Provided that all mandatory lighting devices are installed and that the geometric visibility is not affected	A Provided that all mandatory lighting devices are installed and that the geometric visibility is not affected

▼M4

Item	Subject	Regulatory act	M_1	M_2	M_3	N_1	N_2	N_3	O_1	O_2	O_3	O_4
D16	Emergency stop signal	Regulation (EU) 2019/2144	X	X Only for vehicles fitted with electronically controlled anti-lock braking system	X Only for vehicles fitted with electronically controlled anti-lock braking system	X	X Only for vehicles fitted with electronically controlled anti-lock braking system	X Only for vehicles fitted with electronically controlled anti-lock braking system	not in scope	not in scope	not in scope	not in scope
D17	Headlamp cleaners (IF)	Regulation (EU) 2019/2144	IF	IF	IF	IF	IF	IF	not in scope	not in scope	not in scope	not in scope
D18	Gear shift indicator	Regulation (EU) 2019/2144	G	not in scope	not in scope	not in scope	not in scope	not in scope	not in scope	not in scope	not in scope	not in scope
E	DRIVER AND SYSTEM BEHAVIOUR											
E1	Alcohol interlock installation facilitation	Regulation (EU) 2019/2144	A	A	A	A	A	A	not in scope	not in scope	not in scope	not in scope
E2	Driver drowsiness and attention warning	Regulation (EU) 2019/2144	A	A	A	A	A	A	not in scope	not in scope	not in scope	not in scope

▼M4

Item	Subject	Regulatory act	M_1	M_2	M_3	N_1	N_2	N_3	O_1	O_2	O_3	O_4
▼M8 E3	Advanced driver distraction warning	Regulation (EU) 2019/2144	A Date for refusal to grant EU type- approval: 7 July 2026 Date for the prohibition of the registration of vehicles: 7 July 2028	A Date for refusal to grant EU type- approval: 7 July 2026 Date for the prohibition of the registration of vehicles: 7 July 2028	A Date for refusal to grant EU type- approval: 7 July 2026 Date for the prohibition of the registration of vehicles: 7 July 2028	A Date for refusal to grant EU type- approval: 7 July 2026 Date for the prohibition of the registration of vehicles: 7 July 2028	A Date for refusal to grant EU type- approval: 7 July 2026 Date for the prohibition of the registration of vehicles: 7 July 2028	A Date for refusal to grant EU type- approval: 7 July 2026 Date for the prohibition of the registration of vehicles: 7 July 2028	not in scope	not in scope	not in scope	not in scope
▼M4 E4	Driver availability monitoring system (in case of automated vehicles)	Regulation (EU) 2019/2144	IF	not in the scope	not in the scope	IF	not in the scope	not in the scope	not in scope	not in scope	not in scope	not in scope
E5	Event data recorder	Regulation (EU) 2019/2144	A	no requirement yet	no requirement yet	A	no requirement yet	no requirement yet	not in scope	not in scope	not in scope	not in scope
E6	Systems to replace driver's control (in case of automated vehicles)	Regulation (EU) 2019/2144	IF	no requirement yet	no requirement yet	no requirement yet	no requirement yet	no requirement yet	not in scope	not in scope	not in scope	not in scope

▼M4

Item	Subject	Regulatory act	M_1	M_2	M_3	N_1	N_2	N_3	O_1	O_2	O_3	O_4
E7	Systems to provide the vehicle with information on state of vehicle and surrounding area (in case of automated vehicles)	Regulation (EU) 2019/2144	IF	no requirement yet	no requirement yet	no requirement yet	no requirement yet	no requirement yet	not in scope	not in scope	not in scope	not in scope
E8	Platooning (IF)	Regulation (EU) 2019/2144	no requirement yet	no requirement yet	no requirement yet	no requirement yet	no requirement yet	no requirement yet	not in scope	not in scope	not in scope	not in scope
E9	Systems to provide safety information to other road users (in case of automated vehicles)	Regulation (EU) 2019/2144	no requirement yet	no requirement yet	no requirement yet	no requirement yet	no requirement yet	no requirement yet	not in scope	not in scope	not in scope	not in scope
F	GENERAL VEHICLE CONSTRUCTION AND FEATURES											
F1	Registration plate space	Regulation (EU) 2019/2144	X	X	X	X	X	X	X	X	X	X

▼M4

Item	Subject	Regulatory act	M_1	M_2	M_3	N_1	N_2	N_3	O_1	O_2	O_3	O_4
F2	Reversing motion	Regulation (EU) 2019/2144	X	X	X	X	X	X	not in scope	not in scope	not in scope	not in scope
F3	Door latches and hinges	Regulation (EU) 2019/2144	X	not in scope	not in scope	X	not in scope	not in scope	not in scope	not in scope	not in scope	not in scope
F4	Door entry steps, handholds and running boards	Regulation (EU) 2019/2144	X	not in scope	not in scope	X	X	X	not in scope	not in scope	not in scope	not in scope
F5	External projections	Regulation (EU) 2019/2144	A	not in scope	not in scope	not in scope	not in scope	not in scope	not in scope	not in scope	not in scope	not in scope
F6	External projections of commercial vehicle cabs	Regulation (EU) 2019/2144	not in scope	not in scope	not in scope	A	A	A	not in scope	not in scope	not in scope	not in scope
F7	Statutory plate and vehicle identification number	Regulation (EU) 2019/2144	X	X	X	X	X	X	X	X	X	X
F8	Towing devices	Regulation (EU) 2019/2144	A	A	A	A	A	A	not in scope	not in scope	not in scope	not in scope

▼M4

Item	Subject	Regulatory act	M_1	M_2	M_3	N_1	N_2	N_3	O_1	O_2	O_3	O_4
F9	Wheel guards	Regulation (EU) 2019/2144	G	not in scope	not in scope	not in scope	not in scope	not in scope	not in scope	not in scope	not in scope	not in scope
F10	Spray suppression systems	Regulation (EU) 2019/2144	not in scope	not in scope	not in scope	X	X	X	X	X	X	X
F11	Masses and dimensions	Regulation (EU) 2019/2144	X	X	X	X	X	X	X	X	X	X
F12	Mechanical couplings	Regulation (EU) 2019/2144	IF X	IF X	IF X	IF X	IF X	IF X	X	X	X	X
F13	Vehicles intended for the transportation of dangerous goods (IF)	Regulation (EU) 2019/2144	not in scope	not in scope	not in scope	X	X	X	X	X	X	X
F14	General bus construction	Regulation (EU) 2019/2144	not in scope	A	A	not in scope	not in scope	not in scope	not in scope	not in scope	not in scope	not in scope
F15	Bus strength of superstructure	Regulation (EU) 2019/2144	not in scope	A	A	not in scope	not in scope	not in scope	not in scope	not in scope	not in scope	not in scope

▼M4

Item	Subject	Regulatory act	M_1	M_2	M_3	N_1	N_2	N_3	O_1	O_2	O_3	O_4
F16	Flammability in buses	Regulation (EU) 2019/2144	not in scope	not in scope	X	not in scope	not in scope	not in scope	not in scope	not in scope	not in scope	not in scope
▼M8 G	ENVIRONMENTAL PERFORMANCE AND EMISSIONS for 'Euro 6' vehicles, for 'Euro VI' vehicles and separate technical units and components (*1)											
▼M4 G1	Sound level	Regulation (EU) No 540/2014	X	X	X	X	X	X	not in scope	not in scope	not in scope	not in scope
G2	Tailpipe emissions of vehicle in lab	Regulation (EC) No 715/2007	X At the manufacturer's request Regulation (EC) No 715/2007 may apply to vehicles with a reference mass exceeding 2 840 kg. The approval authority may only grant exemption(s) if the manufacturer demonstrates that the vehicle cannot meet the requirements due to its special purpose. The exemptions granted are to	X At the manufacturer's request Regulation (EC) No 715/2007 may apply to vehicles with a reference mass exceeding 2 840 kg. The approval authority may only grant exemption(s) if the manufacturer demonstrates that the vehicle cannot meet the requirements due to its special purpose. The exemptions granted are to	not in scope	X At the manufacturer's request Regulation (EC) No 715/2007 may apply to vehicles with a reference mass exceeding 2 840 kg. The approval authority may only grant exemption(s) if the manufacturer demonstrates that the vehicle cannot meet the requirements due to its special purpose. The exemptions granted are to	X At the manufacturer's request Regulation (EC) No 715/2007 may apply to vehicles with a reference mass exceeding 2 840 kg. The approval authority may only grant exemption(s) if the manufacturer demonstrates that the vehicle cannot meet the requirements due to its special purpose. The exemptions granted are to	not in scope	not in scope	not in scope	not in scope	not in scope

▼M4

Item	Subject	Regulatory act	M_1	M_2	M_3	N_1	N_2	N_3	O_1	O_2	O_3	O_4
			be described on the vehicle type-approval certificate and the certificate of conformity.	be described on the vehicle type-approval certificate and the certificate of conformity.		be described on the vehicle type-approval certificate and the certificate of conformity.	be described on the vehicle type-approval certificate and the certificate of conformity.					
G2a	Determination of specific CO_2 emissions and fuel consumption of vehicle and device for monitoring on board the vehicle the consumption of fuel and/or electric energy	Regulation (EC) No 715/2007	X At the manufacturer's request Regulation (EC) No 715/2007 may apply to vehicles with a reference mass exceeding 2 840 kg. The approval authority may only grant exemption(s) if the manufacturer demonstrates that the vehicle cannot meet the requirements due to its special purpose. The exemptions granted are to	X At the manufacturer's request Regulation (EC) No 715/2007 may apply to vehicles with a reference mass exceeding 2 840 kg. The approval authority may only grant exemption(s) if the manufacturer demonstrates that the vehicle cannot meet the requirements due to its special purpose. The exemptions granted are to	not in scope	X At the manufacturer's request Regulation (EC) No 715/2007 may apply to vehicles with a reference mass exceeding 2 840 kg. The approval authority may only grant exemption(s) if the manufacturer demonstrates that the vehicle cannot meet the requirements due to its special purpose. The exemptions granted are to	X At the manufacturer's request Regulation (EC) No 715/2007 may apply to vehicles with a reference mass exceeding 2 840 kg. The approval authority may only grant exemption(s) if the manufacturer demonstrates that the vehicle cannot meet the requirements due to its special purpose. The exemptions granted are to	not in scope	not in scope	not in scope	not in scope	not in scope

▼M4

Item	Subject	Regulatory act	M_1	M_2	M_3	N_1	N_2	N_3	O_1	O_2	O_3	O_4
			be described on the vehicle type-approval certificate and the certificate of conformity.	be described on the vehicle type-approval certificate and the certificate of conformity.		be described on the vehicle type-approval certificate and the certificate of conformity.	be described on the vehicle type-approval certificate and the certificate of conformity.					
G3	Tailpipe emissions of engine in lab	Regulation (EC) No 595/2009	X	X	X	X	X	X	not in scope	not in scope	not in scope	not in scope
G3a	Determination of specific CO_2 emissions and fuel consumption of vehicle	Regulation (EC) No 595/2009	not in scope	not in scope	not in scope	not in scope	not in scope	not in scope	not in scope	not in scope	not in scope	not in scope
G3b	Determination of specific energy efficiency performance of trailer	Regulation (EC) No 595/2009	not in scope	not in scope	not in scope	not in scope	not in scope	not in scope	not in scope	not in scope	not in scope	not in scope
▼M8 G4	Tailpipe emissions on the road	Regulation (EC) No 715/2007 Regulation (EC) No 595/2009	X The approval authority may only grant exemptions if the manufacturer demonstrates that the vehicle cannot meet the requirements due to its special purpose. The exemptions granted shall be	X The approval authority may only grant exemptions if the manufacturer demonstrates that the vehicle cannot meet the requirements due to its special purpose. The exemptions granted shall be	X	X The approval authority may only grant exemptions if the manufacturer demonstrates that the vehicle cannot meet the requirements due to its special purpose. The exemptions granted shall be	X The approval authority may only grant exemptions if the manufacturer demonstrates that the vehicle cannot meet the requirements due to its special purpose. The exemptions granted shall be	X	not in scope	not in scope	not in scope	not in scope

▼M8

Item	Subject	Regulatory act	M_1	M_2	M_3	N_1	N_2	N_3	O_1	O_2	O_3	O_4
			described on the vehicle type-approval certificate and the certificate of conformity.	described on the vehicle type-approval certificate and the certificate of conformity.		described on the vehicle type-approval certificate and the certificate of conformity.	described on the vehicle type-approval certificate and the certificate of conformity.					
G5	Durability of tailpipe emissions	Regulation (EC) No 715/2007 Regulation (EC) No 595/2009	X The approval authority may only grant exemption(s) if the manufacturer demonstrates that the vehicle cannot meet the requirements due to its special purpose. The exemptions granted are to be described on the vehicle type-approval certificate and the certificate of conformity.	X The approval authority may only grant exemption(s) if the manufacturer demonstrates that the vehicle cannot meet the requirements due to its special purpose. The exemptions granted are to be described on the vehicle type-approval certificate and the certificate of conformity.	X	X The approval authority may only grant exemption(s) if the manufacturer demonstrates that the vehicle cannot meet the requirements due to its special purpose. The exemptions granted are to be described on the vehicle type-approval certificate and the certificate of conformity.	X The approval authority may only grant exemption(s) if the manufacturer demonstrates that the vehicle cannot meet the requirements due to its special purpose. The exemptions granted are to be described on the vehicle type-approval certificate and the certificate of conformity.	X	not in scope	not in scope	not in scope	not in scope

▼M8

Item	Subject	Regulatory act	M_1	M_2	M_3	N_1	N_2	N_3	O_1	O_2	O_3	O_4
G6	Crankcase emissions	Regulation (EC) No 715/2007 Regulation (EC) No 595/2009	X The approval authority may only grant exemption(s) if the manufacturer demonstrates that the vehicle cannot meet the requirements due to its special purpose. The exemptions granted are to be described on the vehicle type-approval certificate and the certificate of conformity.	X The approval authority may only grant exemption(s) if the manufacturer demonstrates that the vehicle cannot meet the requirements due to its special purpose. The exemptions granted are to be described on the vehicle type-approval certificate and the certificate of conformity.	X	X The approval authority may only grant exemption(s) if the manufacturer demonstrates that the vehicle cannot meet the requirements due to its special purpose. The exemptions granted are to be described on the vehicle type-approval certificate and the certificate of conformity.	X The approval authority may only grant exemption(s) if the manufacturer demonstrates that the vehicle cannot meet the requirements due to its special purpose. The exemptions granted are to be described on the vehicle type-approval certificate and the certificate of conformity.	X	not in scope	not in scope	not in scope	not in scope
G7	Evaporative emissions	Regulation (EC) No 715/2007	X The approval authority may only grant exemption(s) if the manufacturer demonstrates that the vehicle cannot meet the requirements due to its special purpose. The exemptions granted are to	X The approval authority may only grant exemption(s) if the manufacturer demonstrates that the vehicle cannot meet the requirements due to its special purpose. The exemptions granted are to	not in scope	X The approval authority may only grant exemption(s) if the manufacturer demonstrates that the vehicle cannot meet the requirements due to its special purpose. The exemptions granted are to	X The approval authority may only grant exemption(s) if the manufacturer demonstrates that the vehicle cannot meet the requirements due to its special purpose. The exemptions granted are to	not in scope	not in scope	not in scope	not in scope	not in scope

▼M8

Item	Subject	Regulatory act	M_1	M_2	M_3	N_1	N_2	N_3	O_1	O_2	O_3	O_4
			be described on the vehicle type-approval certificate and the certificate of conformity.	be described on the vehicle type-approval certificate and the certificate of conformity.		be described on the vehicle type-approval certificate and the certificate of conformity.	be described on the vehicle type-approval certificate and the certificate of conformity.					
G8	Low-temperature tailpipe emissions in lab	Regulation (EC) No 715/2007	X The approval authority may only grant exemption(s) if the manufacturer demonstrates that the vehicle cannot meet the requirements due to its special purpose. The exemptions granted are to be described on the vehicle type-approval certificate and the certificate of conformity.	X The approval authority may only grant exemption(s) if the manufacturer demonstrates that the vehicle cannot meet the requirements due to its special purpose. The exemptions granted are to be described on the vehicle type-approval certificate and the certificate of conformity.	not in scope	X The approval authority may only grant exemption(s) if the manufacturer demonstrates that the vehicle cannot meet the requirements due to its special purpose. The exemptions granted are to be described on the vehicle type-approval certificate and the certificate of conformity.	X The approval authority may only grant exemption(s) if the manufacturer demonstrates that the vehicle cannot meet the requirements due to its special purpose. The exemptions granted are to be described on the vehicle type-approval certificate and the certificate of conformity.	not in scope	not in scope	not in scope	not in scope	not in scope

▼M8

Item	Subject	Regulatory act	M_1	M_2	M_3	N_1	N_2	N_3	O_1	O_2	O_3	O_4
G9	On-board diagnostics	Regulation (EC) No 715/2007 Regulation (EC) No 595/2009	X The approval authority may only grant exemption(s) if the manufacturer demonstrates that the vehicle cannot meet the requirements due to its special purpose. The exemptions granted are to be described on the vehicle type-approval certificate and the certificate of conformity.	X The approval authority may only grant exemption(s) if the manufacturer demonstrates that the vehicle cannot meet the requirements due to its special purpose. The exemptions granted are to be described on the vehicle type-approval certificate and the certificate of conformity.	X The approval authority may only grant exemption(s) if the manufacturer demonstrates that the vehicle cannot meet the requirements due to its special purpose. The exemptions granted are to be described on the vehicle type-approval certificate and the certificate of conformity.	X The approval authority may only grant exemption(s) if the manufacturer demonstrates that the vehicle cannot meet the requirements due to its special purpose. The exemptions granted are to be described on the vehicle type-approval certificate and the certificate of conformity.	X The approval authority may only grant exemption(s) if the manufacturer demonstrates that the vehicle cannot meet the requirements due to its special purpose. The exemptions granted are to be described on the vehicle type-approval certificate and the certificate of conformity.	not in scope	not in scope	not in scope	not in scope	not in scope
▼M4 G10	Absence of defeat device	Regulation (EC) No 715/2007 Regulation (EC) No 595/2009	X	X	X	X	X	X	not in scope	not in scope	not in scope	not in scope
G11	Auxiliary emissions strategies	Regulation (EC) No 715/2007 Regulation (EC) No 595/2009	X	X	X	X	X	X	not in scope	not in scope	not in scope	not in scope

▼M4

Item	Subject	Regulatory act	M_1	M_2	M_3	N_1	N_2	N_3	O_1	O_2	O_3	O_4
G12	Anti-tampering	Regulation (EC) No 715/2007 Regulation (EC) No 595/2009	X	X	X	X	X	X	not in scope	not in scope	not in scope	not in scope
G13	Recyclability	Directive 2005/64/EC	n/a However, Annex V on prohibition of reuse of the specified component parts shall apply.	not in scope	not in scope	n/a However, Annex V on prohibition of reuse of the specified component parts shall apply.	not in scope	not in scope	not in scope	not in scope	not in scope	not in scope
G14	Air-conditioning systems	Directive 2006/40/EC	X	not in scope	not in scope	X	not in scope	not in scope	not in scope	not in scope	not in scope	not in scope

▼M4

▼M8

Item	Subject	Regulatory act	M_1	M_2	M_3	N_1	N_2	N_3	O_1	O_2	O_3	O_4
G16	Measurement of engine power	Regulation (EC) No 715/2007 Regulation (EC) No 595/2009	X	X	X	X	X	X	not in scope	not in scope	not in scope	not in scope
G17	Operation of systems using consumable reagent and pollution control systems	Regulation (EC) No 715/2007 Regulation (EC) No 595/2009	X The approval authority may only grant exemptions if the manufacturer demonstrates that the vehicle cannot meet the requirements due to its special purpose. The exemptions granted are to be described on the vehicle type-approval certificate and the certificate of conformity.	X	X	X The approval authority may only grant exemptions if the manufacturer demonstrates that the vehicle cannot meet the requirements due to its special purpose. The exemptions granted are to be described on the vehicle type-approval certificate and the certificate of conformity.	X	X	not in scope	not in scope	not in scope	not in scope

▼M8

Item	Subject	Regulatory act	M_1	M_2	M_3	N_1	N_2	N_3	O_1	O_2	O_3	O_4
GA	ENVIRONMENTAL PERFORMANCE AND EMISSIONS for 'Euro 7' and 'Euro 7ext' vehicles, separate technical units and components (*2)											
GA1	Sound level	Regulation (EU) No 540/2014	X	X	X	X	X	X	not in scope	not in scope	not in scope	not in scope
GA2	Tailpipe emissions of vehicle in lab	Regulation (EU) 2024/1257 Commission Implementing Regulation (EU) 2025/1706	X The approval authority may only grant exemptions if the manufacturer demonstrates that the vehicle cannot meet the requirements due to its special purpose. The exemptions granted are to be described on the vehicle type-approval certificate and the certificate of conformity.			X The approval authority may only grant exemptions if the manufacturer demonstrates that the vehicle cannot meet the requirements due to its special purpose. The exemptions granted are to be described on the vehicle type-approval certificate and the certificate of conformity			not in scope	not in scope	not in scope	not in scope

▼M8

Item	Subject	Regulatory act	M_1	M_2	M_3	N_1	N_2	N_3	O_1	O_2	O_3	O_4
GA2a	Determination of specific CO_2 emissions and fuel consumption of vehicle and device for monitoring on board the vehicle the consumption of fuel and/or electric energy	Regulation (EU) 2024/1257 Commission Implementing Regulation (EU) 2025/1706	X The approval authority may only grant exemptions if the manufacturer demonstrates that the vehicle cannot meet the requirements due to its special purpose. The exemptions granted are to be described on the vehicle type-approval certificate and the certificate of conformity.		not in scope	X The approval authority may only grant exemptions if the manufacturer demonstrates that the vehicle cannot meet the requirements due to its special purpose. The exemptions granted are to be described on the vehicle type-approval certificate and the certificate of conformity.		not in scope	not in scope	not in scope	not in scope	not in scope
GA4	Tailpipe emissions on the road	Regulation (EU) 2024/1257 Commission Implementing Regulation (EU) 2025/1706	X The approval authority may only grant exemption(s) if the manufacturer demonstrates that the vehicle cannot meet the requirements due to its special purpose. The exemptions granted are to			X The approval authority may only grant exemption(s) if the manufacturer demonstrates that the vehicle cannot meet the requirements due to its special purpose. The exemptions grantedare to			not in scope	not in scope	not in scope	not in scope

▼M8

Item	Subject	Regulatory act	M_1	M_2	M_3	N_1	N_2	N_3	O_1	O_2	O_3	O_4
			be described on the vehicle type-approval certificate and the certificate of conformity.			be described on the vehicle type-approval certificate and the certificate of conformity.						
GA5	Durability of tailpipe emissions	Regulation (EU) 2024/1257 Commission Implementing Regulation (EU) 2025/1706	X The approval authority may only grant exemptions if the manufacturer demonstrates that the vehicle cannot meet the requirements due to its special purpose. The exemptions granted are to be described on the vehicle type-approval certificate and the certificate of conformity.			X The approval authority may only grant exemptions if the manufacturer demonstrates that the vehicle cannot meet the requirements due to its special purpose. The exemptions granted are to be described on the vehicle type-approval certificate and the certificate of conformity.			not in scope	not in scope	not in scope	not in scope

▼M8

Item	Subject	Regulatory act	M_1	M_2	M_3	N_1	N_2	N_3	O_1	O_2	O_3	O_4
GA6	Crankcase emissions	Regulation (EU) 2024/1257 Commission Implementing Regulation (EU) 2025/1706	X The approval authority may only grant exemptions if the manufacturer demonstrates that the vehicle cannot meet the requirements due to its special purpose. The exemptions granted are to be described on the vehicle type-approval certificate and the certificate of conformity.			X The approval authority may only grant exemptions if the manufacturer demonstrates that the vehicle cannot meet the requirements due to its special purpose. The exemptions granted are to be described on the vehicle type-approval certificate and the certificate of conformity.			not in scope	not in scope	not in scope	not in scope
GA7	Evaporative emissions	Regulation (EU) 2024/1257 Commission Implementing Regulation (EU) 2025/1706	X The approval authority may only grant exemptions if the manufacturer demonstrates that the vehicle cannot meet the requirements due to its special purpose. The exemptions granted are to	not in scope	not in scope	X The approval authority may only grant exemptions if the manufacturer demonstrates that the vehicle cannot meet the requirements due to its special purpose. The exemptions grantedare to	not in scope	not in scope	not in scope	not in scope	not in scope	not in scope

▼M8

Item	Subject	Regulatory act	M_1	M_2	M_3	N_1	N_2	N_3	O_1	O_2	O_3	O_4
			be described on the vehicle type-approval certificate and the certificate of conformity.			be described on the vehicle type-approval certificate and the certificate of conformity.						
GA8	Low-temperature tailpipe emissions in lab	Regulation (EU) 2024/1257 Commission Implementing Regulation (EU) 2025/1706	X The approval authority may only grant exemptions if the manufacturer demonstrates that the vehicle cannot meet the requirements due to its special purpose. The exemptions granted are to be described on the vehicle type-approval certificate and the certificate of conformity.	not in scope	not in scope	X The approval authority may only grant exemptions if the manufacturer demonstrates that the vehicle cannot meet the requirements due to its special purpose. The exemptions granted are to be described on the vehicle type-approval certificate and the certificate of conformity.	not in scope	not in scope	not in scope	not in scope	not in scope	not in scope

▼M8

Item	Subject	Regulatory act	M_1	M_2	M_3	N_1	N_2	N_3	O_1	O_2	O_3	O_4
GA9	On-board diagnostics	Regulation (EU) 2024/1257 Commission Implementing Regulation (EU) 2025/1706	X The approval authority may only grant exemptions if the manufacturer demonstrates that the vehicle cannot meet the requirements due to its special purpose. The exemptions granted are to be described on the vehicle type-approval certificate and the certificate of conformity.			X The approval authority may only grant exemptions if the manufacturer demonstrates that the vehicle cannot meet the requirements due to its special purpose. The exemptions granted are to be described on the vehicle type-approval certificate and the certificate of conformity.			not in scope	not in scope	not in scope	not in scope
GA10	Absence of manipulation devices and strategies	Regulation (EU) 2024/1257 Commission Implementing Regulation (EU) 2025/1706 Commission Implementing Regulation (EU) 2025/1707	X			X			not in scope	not in scope	not in scope	not in scope

▼M8

Item	Subject	Regulatory act	M_1	M_2	M_3	N_1	N_2	N_3	O_1	O_2	O_3	O_4
GA11	Auxiliary emissions strategies	Regulation (EU) 2024/1257 Commission Implementing Regulation (EU) 2025/1706	X			X			not in scope	not in scope	not in scope	not in scope
GA12	Anti-tampering, security and cybersecurity	Regulation (EU) 2024/1257 Commission Implementing Regulation (EU) 2025/1706	X			X			not in scope	not in scope	not in scope	not in scope
GA13	Recyclability	Directive 2005/64/EC	n/a However, Annex V on prohibition of reuse of the specified component parts shall apply	not in scope	not in scope	n/a However, Annex V on prohibition of reuse of the specified component parts shall apply	not in scope	not in scope	not in scope	not in scope	not in scope	not in scope
GA14	Air-conditioning systems	Directive 2006/40/EC	X	not in scope	not in scope	X	not in scope	not in scope	not in scope	not in scope	not in scope	not in scope

▼M8

Item	Subject	Regulatory act	M_1	M_2	M_3	N_1	N_2	N_3	O_1	O_2	O_3	O_4
GA16	Measurement of engine power	Regulation (EU) 2024/1257 Commission Implementing Regulation (EU) 2025/1706	X			X			not in scope	not in scope	not in scope	not in scope
GA17	Operation of systems using consumable reagent and pollution control systems	Regulation (EU) 2024/1257 Commission Implementing Regulation (EU) 2025/1706	X The approval authority may only grant exemptions if the manufacturer demonstrates that the vehicle cannot meet the requirements due to its special purpose. The exemptions granted are to be described on the vehicle type-approval certificate and the certificate of conformity.			X The approval authority may only grant exemptions if the manufacturer demonstrates that the vehicle cannot meet the requirements due to its special purpose. The exemptions granted are to be described on the vehicle type-approval certificate and the certificate of conformity.			not in scope	not in scope	not in scope	not in scope

▼M8

Item	Subject	Regulatory act	M_1	M_2	M_3	N_1	N_2	N_3	O_1	O_2	O_3	O_4
GA18	On-board monitoring (OBM), in-vehicle display of environmental data and environmental vehicle passport	Regulation (EU) 2024/1257 Commission Implementing Regulation (EU) 2025/1707	X The approval authority may only grant exemption(s) if the manufacturer demonstrates that the vehicle cannot meet the requirements due to its special purpose. The exemptions granted are to be described on the vehicle type-approval certificate and the certificate of conformity. This also holds for Over-The-Air requirements for the On-Board Fuel Consumption Monitoring (OBFCM) system.			X The approval authority may only grant exemption(s) if the manufacturer demonstrates that the vehicle cannot meet the requirements due to its special purpose. The exemptions granted are to be described on the vehicle type-approval certificate and the certificate of conformity. This also holds for Over-The-Air requirements for the On-Board Fuel Consumption Monitoring (OBFCM) system.			not in scope	not in scope	not in scope	not in scope

▼M4

Item	Subject	Regulatory act	M_1	M_2	M_3	N_1	N_2	N_3	O_1	O_2	O_3	O_4
H	ACCESS TO VEHICLE INFORMATION AND SOFTWARE UPDATE											
H1	Access to vehicle OBD information and vehicle repair and maintenance information	Regulation (EU) 2018/858, Articles 61 to 66 and Annex X	X	X	X	X	X	X	X	X	X	X
H2	Software update	Regulation (EU) 2018/858 UN Regulation No 156	X	X	X	X	X	X	X	X		

(*1) For light-duty vehicles in accordance with Regulation (EC) No 715/2007 (Euro 6 vehicles) or heavy-duty vehicles in accordance with Regulation (EC) No 595/2009 (Euro VI vehicles), compliance with items G2 to G12, G16 and G17 is mandatory, however, only a single vehicle emissions type-approval either under Regulation (EC) No 715/2007 or under Regulation (EC) No 595/2009 is foreseen depending on the scope.

(*2) For vehicles in accordance with Regulation (EU) 2024/1257 (Euro 7 or Euro 7ext vehicles), a collection of type-approvals and/or declarations of compliance is necessary as set out in the implementing legislation refered to in items GA2 to GA18 (excluding items GA13 and GA14). Requirements for Euro 7ext vehicles are those indicated in the column for N1 category vehicles.

▼M4

Appendix 3

Wheelchair-accessible vehicles

Item	Subject	Regulatory act	M_1
A	RESTRAINT SYSTEMS, CRASH TESTING, FUEL SYSTEM INTEGRITY AND HIGH VOLTAGE ELECTRICAL SAFETY		
A1	Interior fittings	Regulation (EU) 2019/2144	G Note G may be applied to those fittings in the interior of the vehicle that are not significantly affected by the modification, however, any added or modified fittings in the interior shall comply with the requirements as applicable for vehicle category M_1 Application is limited to the passenger compartment in front of the transverse plane passing through the torso reference line of the 3-D H-point machine placed on the rearmost seat designated for normal use when the vehicle is used on a public road, as well as to the respective reference zones of each seating position designated for normal use as defined in the regulatory act when the vehicle type is subject to the requirements applicable to vehicle category M_1.
A2	Seats and head restraints	Regulation (EU) 2019/2144	G Note G may be applied to seats and head restraints of the vehicle that are not significantly affected by the modification, however, any added or modified fittings concerning seats and head restraints shall comply with the requirements as applicable for vehicle category M_1 The energy dissipation and radii requirements of seats and head restraints are checked in accordance with paragraphs 5.2.3/5.2.4.2. and 5.2.4. of UN Regulation No 17 when the vehicle type is subject to the requirements applicable to vehicle category M_1. The longitudinal plane of the intended wheelchair-travelling position shall be parallel to the longitudinal plane of the vehicle. Appropriate information is to be made available to the vehicle owner that, in order to withstand the forces transmitted by the tie-down mechanism during the various driving conditions, a wheelchair with a structure meeting the relevant part of ISO 7176-19:2008/Amd 1:2015 (or later revisions) is recommended. The seats of the vehicle may be adapted without further testing, provided it can be demonstrated to the satisfaction of the technical service that their anchorages, mechanisms and head restraints provide an adequate level of performance. The luggage retention requirements of UN Regulation No 17 (para. 1, point (c) and Annex 9) do not apply.
A3	Bus seats	Regulation (EU) 2019/2144	not in scope

▼M4

Item	Subject	Regulatory act	M_1
A4	Safety-belt anchorages	Regulation (EU) 2019/2144	X Each wheelchair location shall be provided with anchorages to which a wheelchair tie-down and occupant restraint system (WTORS) is to be fitted, and that complies with the additional provisions for testing the wheelchair tie down and occupant restraint system set out below. 1. Definitions 1.1. Surrogate wheelchair (SWC) means a rigid, re-usable test wheelchair, as defined in Section 3 of international standard ISO 10542-1:2012. 1.2. Point P means a representation of the position of the wheelchair occupant's hip when seated in the SWC, as defined in Section 3 of international standard ISO 10542-1:2012. At the request of the manufacturer, a heavier surrogate wheelchair may be used, provided it has the same dimensional characteristics and centre of gravity position as the prescribed version. The pneumatic tyres may be replaced with solid or foam-filled versions in the same size. 1.3. WTORS means a wheelchair tie-down and occupant restraint system. 2. General requirements 2.1. Each wheelchair location shall be provided with anchorages to which a WTORS can be fitted. 2.2. The wheelchair occupant's lower belt anchorages shall be located in accordance with paragraph 5.4.2.2 UN Regulation No 14, relative to Point P on the SWC, when placed in the travelling position designated by the manufacturer. The upper actual anchorage(s) shall be located at least 1 100 mm above the horizontal plane passing through the points of contact between the rear tyres of the SWC and the vehicle floor. That condition shall still be satisfied after the test carried out in accordance with points 3 or 4 below. Either point 3 or 4 shall apply. 3. Static in-vehicle testing 3.1. Wheelchair occupant restraint anchorages 3.1.1. The wheelchair occupant restraint anchorages shall resist the static forces prescribed for occupant restraint anchorages in UN Regulation No 14, simultaneously with the static forces applied to the wheelchair tie-down anchorages as specified in point 3.2. 3.2. Wheelchair tie-down anchorages The wheelchair tie-down anchorages shall resist the following forces, for at least 0,2 seconds, applied via the SWC (or a suitable surrogate wheelchair having a wheelbase, seat height and tie-down attachment points in accordance with the specification for the SWC), at a height of 300 +/– 100 mm from the surface on which the SWC rests:

▼M4

Item	Subject	Regulatory act	M_1
			3.2.1. In the case of a forward-facing wheelchair, a simultaneous force, coinciding with the force applied to the occupant restraint anchorages, of 24,5 kN; and 3.2.2. a second test applying a static force of 8,2 kN directed towards the rear of the vehicle. 3.2.3. In the case of a rearward-facing wheelchair, a simultaneous force, coincident with the force applied to the occupant restraint anchorages, of 8,2 kN, and 3.2.4. a second test applying a static force of 24,5 kN directed towards the front of the vehicle 4. Dynamic in-vehicle testing 4.1. The full assembly of the WTORS system shall be tested by an in-vehicle dynamic test in accordance with points 5.2.2 and 5.2.3 and Annex A to international standard ISO 10542-1:2012, testing all components/anchorages simultaneously, using a vehicle body-in-white or representative structure.
A5	Safety-belts and restraint systems	Regulation (EU) 2019/2144	X Each wheelchair location is to be provided with an occupant restraint belt that complies with the additional provisions for testing the wheelchair tie down and occupant restraint system of set out below. When, due to the conversion, anchorage points for the safety belts need to be moved outside the tolerance provided for in paragraph 7.7.1 of UN Regulation No 16, the technical service shall check whether the alteration constitutes a worst-case or not. If that is the case, the test provided for in paragraph 7.7.1 of UN Regulation No 16 shall be performed. The test may be performed using components that have not undergone the conditioning test prescribed by UN Regulation No 16. 1. Definitions 1.1. Surrogate wheelchair (SWC) means a rigid, re-usable test wheelchair, as defined in Section 3 of international standard ISO 10542-1:2012. 1.2. Point P means a representation of the position of the wheelchair occupant's hip when seated in the SWC, as defined in Section 3 of international standard ISO 10542-1:2012. At the request of the manufacturer, a heavier surrogate wheelchair may be used, provided it has the same dimensional characteristics and centre of gravity position as the prescribed version. The pneumatic tyres may be replaced with solid or foam-filled versions in the same size. 1.3. WTORS means a wheelchair tie-down and occupant restraint system.

▼M4

Item	Subject	Regulatory act	M_1
			2. General requirements 2.1. An assessment shall be made of the WTORS occupant belt to ensure compliance with paragraphs 8.2.2 to 8.2.2.4 and 8.3.1 to 8.3.4 of UN Regulation No 16. Either point 3. or 4. shall apply. 3. Static in-vehicle testing 3.1. Components of the system 3.1.1. Where the WTORS anchorages have been tested statically in the vehicle, all components of the WTORS shall meet the relevant requirements of international standard ISO 10542-1:2012. However, the dynamic test specified in Annex A to, and points 5.2.2. and 5.2.3. of, international standard ISO 10542-1:2012 shall be carried out on the complete WTORS using the vehicle anchorage geometry instead of the test geometry specified in Annex A to international standard ISO 10542-1:2012. This may be carried out within the vehicle structure or on a surrogate structure representative of the vehicle's WTORS anchorage geometry. The location of each anchorage used for the test shall lie within the tolerance provided for in paragraph 7.7.1 of UN Regulation No 16, of its true position relative to Point P. 3.1.2. Where the occupant restraint part of the WTORS is approved in accordance with UN Regulation No 16, it shall be subject to the dynamic test as part of the complete WTORS specified in point 3.1.1., however, the requirements of points 5.1, 5.3 and 5.4 of international standard ISO10542-1:2012 shall be considered to have been met. 4. Dynamic in-vehicle testing 4.1. Where the WTORS anchorages have been tested dynamically in the vehicle, the component parts of the WTORS shall meet the relevant requirements of international standard ISO 10542-1:2012, points 5.1, 5.3 and 5.4. These requirements shall be deemed to have been met in respect of the occupant restraint if it is approved in accordance with UN Regulation No 16.
A6	Safety-belt reminders	Regulation (EU) 2019/2144	n/a
A7	Partitioning systems	Regulation (EU) 2019/2144	equipment
A8	Child restraint anchorages	Regulation (EU) 2019/2144	IF The minimum number of ISOFIX child seat anchorages need not to be provided. In the case of a multi-stage type approval where an ISOFIX anchorage system has been affected by the conversion, either the system shall be re-tested or the anchorages shall be rendered unusable. In the latter case the ISOFIX labels shall be removed and appropriate information shall be provided in the vehicle owner's manual for the completed vehicle.

▼M4

Item	Subject	Regulatory act	M_1
A9	Child restraint systems (IF)	Regulation (EU) 2019/2144	equipment
A10	Enhanced child restraint systems (IF)	Regulation (EU) 2019/2144	equipment
A11	Front underrun protection	Regulation (EU) 2019/2144	not in scope
A12	Rear underrun protection	Regulation (EU) 2019/2144	X
A13	Lateral protection	Regulation (EU) 2019/2144	not in scope
A14	Fuel tank safety (IF)	Regulation (EU) 2019/2144	X Modification of the routing, length of the refuelling duct, fuel hoses and fuel vapour pipes as well as re-positioning of the original tank and evaporative control devices provided by the manufacturer of the base vehicle is permissible without further testing provided the installation requirements of paragraphs 5.4, 5.5, 5.6, 5.7, 5.8, and 5.11 of UN Regulation No 34 are met, and provided that the technical service is satisfied, by visual inspection, that the essential requirements of paragraph 5.10 of that Regulation have been satisfied. In cases involving re-positioning of the original plastic tank, further testing in accordance with Annex 5 to UN Regulation No 34 is not required.
A15	Liquified petroleum gas safety (IF)	Regulation (EU) 2019/2144	G
A16	Compressed and liquified natural gas safety (IF)	Regulation (EU) 2019/2144	G
A17	Hydrogen safety (IF)	Regulation (EU) 2019/2144	G
A18	Hydrogen system material qualification (IF)	Regulation (EU) 2019/2144	X

▼M8

A19	In-use electric safety (IF)	Regulation (EU) 2019/2144	G Modification to the vehicle structure shall not require testing in accordance with paragraphs 6.4 and 6.5 of UN Regulation No 100, provided that the rechargeable electric energy storage system is not modified.

▼M4

Item	Subject	Regulatory act	M_1
A20	Frontal off-set impact	Regulation (EU) 2019/2144	G Alternatively, a suitable torsion stiffness test, in which a torque is applied to the vehicle as close as practicable to the spring mounting points, with all doors, hatches and bonnet opened, shall demonstrate that the torsional stiffness is within ± 75 % of that of the unmodified previous-stage vehicle body. In addition, a bending stiffness test shall be carried out with the vehicle on level ground, in which all side and rear doors and hatches shall open normally when the vehicle is loaded to its technically maximum permissible laden mass.
A21	Frontal full-width impact	Regulation (EU) 2019/2144	G Alternatively, a suitable torsion stiffness test, in which a torque is applied to the vehicle as close as practicable to the spring mounting points, with all doors, hatches and bonnet opened, shall demonstrate that the torsional stiffness is within ± 75 % of that of the unmodified previous-stage vehicle body. In addition, a bending stiffness test shall be carried out with the vehicle on level ground, in which all side and rear doors and hatches shall open normally when the vehicle is loaded to its technically maximum permissible laden mass.
A22	Protective steering	Regulation (EU) 2019/2144	G n/a in case of modified steering systems for drivers with special needs
A23	Replacement airbag	Regulation (EU) 2019/2144	equipment
A24	Cab impact	Regulation (EU) 2019/2144	not in scope
A25	Side impact	Regulation (EU) 2019/2144	G Alternatively, a suitable torsion stiffness test, in which a torque is applied to the vehicle as close as practicable to the spring mounting points, with all doors, hatches and bonnet opened, shall demonstrate that the torsional stiffness is within ± 75 % of that of the unmodified previous-stage vehicle body. In addition, a bending stiffness test shall be carried out with the vehicle on level ground, in which all side and rear doors and hatches shall open normally when the vehicle is loaded to its technically maximum permissible laden mass.
A26	Pole side impact	Regulation (EU) 2019/2144	n/a
A27	Rear impact	Regulation (EU) 2019/2144	n/a
A28	112-based eCall in-vehicles systems	Regulation (EU) 2015/758	G

▼M4

Item	Subject	Regulatory act	M_1
B	VULNERABLE ROAD USERS, VISION AND VISIBILITY		
B1	Pedestrian leg and head protection	Regulation (EU) 2019/2144	G
B2	Enlarged head impact zone	Regulation (EU) 2019/2144	G Modifications to the interior fittings directly behind the windscreen do not have to be taken into account.
B3	Frontal protection system	Regulation (EU) 2019/2144	equipment
B4	Advanced emergency braking for pedestrians and cyclists ahead	Regulation (EU) 2019/2144	G n/a in case of modified braking systems for drivers with special needs
B5	Pedestrian and cyclist collision warning	Regulation (EU) 2019/2144	not in scope
B6	Blind spot information system	Regulation (EU) 2019/2144	not in scope
B7	Reversing detection	Regulation (EU) 2019/2144	A May be partly exempted if equipment for special needs passengers prevents full compliance with the requirements and may be fully exempted if it is impossible to meet these requirements
B8	Forward vision	Regulation (EU) 2019/2144	G
B9	Heavy-duty vehicles direct vision	Regulation (EU) 2019/2144	not in scope
B10	Safety glazing	Regulation (EU) 2019/2144	G
B11	Defrost/demist	Regulation (EU) 2019/2144	G
B12	Wash/wipe	Regulation (EU) 2019/2144	G
B13	Indirect vision devices	Regulation (EU) 2019/2144	X
B14	Acoustic Vehicle Alerting Systems	Regulation (EU) No 540/2014	X

▼M4

Item	Subject	Regulatory act	M_1
C	VEHICLE CHASSIS, BRAKING, TYRES AND STEERING		
C1	Steering equipment	Regulation (EU) 2019/2144	G
C2	Lane departure warning	Regulation (EU) 2019/2144	not in scope
C3	Emergency lane keeping	Regulation (EU) 2019/2144	G n/a in case of modified steering systems for drivers with special needs, or in case of modified braking system if the ELKS of the base vehicle acts on the braking system instead.
C4	Braking	Regulation (EU) 2019/2144	G
C5	Replacement braking parts	Regulation (EU) 2019/2144	equipment
C6	Brake assist	Regulation (EU) 2019/2144	G n/a in case of modified braking systems for drivers with special needs
C7	Stability control	Regulation (EU) 2019/2144	G In case of modifications to the stability control system included as part of a previous stage type-approval, which are likely to affect the function of that base vehicle's stability control system, it shall be demonstrated that the vehicle has not been rendered unsafe or unstable. This shall be proven by tests e.g. performing rapid double lane-change manoeuvres in each direction at 80 km/h with sufficient severity to cause intervention by the stability control system. These interventions shall be well-controlled and shall improve the stability of the vehicle under those driving conditions in comparison to the stability of the vehicle with, where practicable, a disabled stability control system. All tests are subject to the agreement between the manufacturer and technical service.
C8	Advanced emergency braking on heavy-duty vehicles	Regulation (EU) 2019/2144	not in scope
C9	Advanced emergency braking on light-duty vehicles	Regulation (EU) 2019/2144	G n/a in case of modified braking systems for drivers with special needs
C10	Tyre safety and environmental performance	Regulation (EU) 2019/2144	X

▼M4

Item	Subject	Regulatory act	M_1
C11	Spare wheels and run-flat systems (IF)	Regulation (EU) 2019/2144	X
C12	Retreaded tyres	Regulation (EU) 2019/2144	equipment
C13	Tyre pressure monitoring for light-duty vehicles	Regulation (EU) 2019/2144	G
C14	Tyre pressure monitoring for heavy-duty vehicles	Regulation (EU) 2019/2144	not in scope
C15	Tyre installation	Regulation (EU) 2019/2144	X
C16	Replacement wheels	Regulation (EU) 2019/2144	equipment
D	ON-BOARD INSTRUMENTS, ELECTRICAL SYSTEM, VEHICLE LIGHTING AND PROTECTION AGAINST UNAUTHORISED USE, INCLUDING CYBERATTACKS		
D1	Audible warning	Regulation (EU) 2019/2144	X
D2	Radio interference (electromagnetic compatibility)	Regulation (EU) 2019/2144	X
D3	Protection against unauthorised use, immobiliser and alarm systems	Regulation (EU) 2019/2144	X
D4	Protection of vehicle against cyberattacks	Regulation (EU) 2019/2144	X
D5	Speedometer	Regulation (EU) 2019/2144	X
D6	Odometer	Regulation (EU) 2019/2144	X
D7	Speed limitation devices	Regulation (EU) 2019/2144	not in scope
D8	Intelligent speed assistance	Regulation (EU) 2019/2144	A May be partly exempted if equipment for special needs passengers prevents full compliance with the requirements and may be fully exempted if it is impossible to meet these requirements

▼M4

Item	Subject	Regulatory act	M_1
D9	Identification of controls, tell-tales and indicators	Regulation (EU) 2019/2144	X
D10	Heating systems	Regulation (EU) 2019/2144	X
D11	Light signalling devices	Regulation (EU) 2019/2144	X
D12	Road illumination devices	Regulation (EU) 2019/2144	X
D13	Retro-reflective devices	Regulation (EU) 2019/2144	X
D14	Light sources	Regulation (EU) 2019/2144	X
D15	Installation of light signalling, road illumination and retro-reflective devices	Regulation (EU) 2019/2144	X
D16	Emergency stop signal	Regulation (EU) 2019/2144	X Only for vehicles fitted with electronically controlled anti-lock braking system
D17	Headlamp cleaners (IF)	Regulation (EU) 2019/2144	IF
D18	Gear shift indicator	Regulation (EU) 2019/2144	G
E	DRIVER AND SYSTEM BEHAVIOUR		
E1	Alcohol interlock installation facilitation	Regulation (EU) 2019/2144	A
E2	Driver drowsiness and attention warning	Regulation (EU) 2019/2144	A May be partly exempted if equipment for special needs passengers prevents full compliance with the requirements and may be fully exempted if it is impossible to meet these requirements
E3	Advanced driver distraction warning	Regulation (EU) 2019/2144	A May be partly exempted if equipment for special needs passengers prevents full compliance with the requirements and may be fully exempted if it is impossible to meet those requirements. Date for refusal to grant EU type- approval: 7 July 2026 Date for the prohibition of the registration of vehicles: 7 July 2028

▼M8

▼M4

Item	Subject	Regulatory act	M_1
E4	Driver availability monitoring system (in case of automated vehicles)	Regulation (EU) 2019/2144	IF
E5	Event data recorder	Regulation (EU) 2019/2144	A May be partly exempted if equipment for special needs passengers prevents full compliance with the requirements and may be fully exempted if it is impossible to meet these requirements
E6	Systems to replace driver's control (in case of automated vehicles)	Regulation (EU) 2019/2144	IF
E7	Systems to provide the vehicle with information on state of vehicle and surrounding area (in case of automated vehicles)	Regulation (EU) 2019/2144	IF
E8	Platooning (IF)	Regulation (EU) 2019/2144	No requirement yet
E9	Systems to provide safety information to other road users (in case of automated vehicles)	Regulation (EU) 2019/2144	No requirement yet
F	GENERAL VEHICLE CONSTRUCTION AND FEATURES		
F1	Registration plate space	Regulation (EU) 2019/2144	X
F2	Reversing motion	Regulation (EU) 2019/2144	X
F3	Door latches and hinges	Regulation (EU) 2019/2144	X
F4	Door entry steps, handholds and running boards	Regulation (EU) 2019/2144	X

▼M4

Item	Subject	Regulatory act	M_1
F5	External projections	Regulation (EU) 2019/2144	G Any boarding aids are considered only in the stowed position
F6	External projections of commercial vehicle cabs	Regulation (EU) 2019/2144	not in scope
F7	Statutory plate and vehicle identification number	Regulation (EU) 2019/2144	X
F8	Towing devices	Regulation (EU) 2019/2144	X Required for the front only, to be tested if fitted at the rear
F9	Wheel guards	Regulation (EU) 2019/2144	G
F10	Spray suppression systems	Regulation (EU) 2019/2144	not in scope
F11	Masses and dimensions	Regulation (EU) 2019/2144	X For the purposes of calculations, the mass of the wheelchair including the user is assumed to be 160 kg. The mass is concentrated at the P point of the surrogate wheelchair in its travelling position as declared by the manufacturer. It is permitted to temporarily limit the overall passenger capacity and to restrict the use of normal seating positions as a result of the actual transport of wheelchairs, with their users. In such case, the affected normal seating positions shall be clearly and permanently identified to users, either by means of a pictogram or a sign with an appropriate text. This shall be noted in Part 2 of the EU type-approval certificate as well as under 'remarks' in the Certificate of Conformity as to allow inclusion of this information in on-board vehicle registration papers. In addition, the following shall be explained in the owner's manual for the completed vehicle: The meaning of any pictograms used to mark the affected seating positions, as well as a more detailed description of the specific restrictions, if necessary.
F12	Mechanical couplings	Regulation (EU) 2019/2144	IF X
F13	Vehicles intended for the transportation of dangerous goods (IF)	Regulation (EU) 2019/2144	not in scope

▼M4

Item	Subject	Regulatory act	M_1
F14	General bus construction	Regulation (EU) 2019/2144	not in scope
F15	Bus strength of superstructure	Regulation (EU) 2019/2144	not in scope
F16	Flammability in buses	Regulation (EU) 2019/2144	not in scope

▼M8

G	ENVIRONMENTAL PERFORMANCE AND EMISSIONS for ‘Euro 6’ vehicles, for ‘Euro VI’ vehicles and separate technical units and components ([*1])		

▼M4

G1	Sound level	Regulation (EU) No 540/2014	G Modification of the exhaust system length is permitted without the need for retesting, provided that the exhaust back pressure remains similar.
G2	Tailpipe emissions of vehicle in lab	Regulation (EC) No 715/2007	G Modification in the exhaust system is permitted without any further test of tailpipe emissions provided that the emission control devices, including particulate filters (if any), are not affected. In case of conversion of a vehicle (e.g. in a multi-stage type-approval process), the manufacturer responsible for the conversion needs to consult the original (complete or incomplete) vehicle manufacturer to get confirmation that the converted vehicle is covered by the emission approval of the original (complete or incomplete) vehicle. In such a case it is acceptable if the reference mass of the converted vehicle will exceed 2 840 kg.
G2a	Determination of specific CO_2 emissions and fuel consumption of vehicle and device for monitoring on board the vehicle the consumption of fuel and/or electric energy	Regulation (EC) No 715/2007	G Modification in the exhaust system is permitted without any further test of CO_2/fuel consumption provided that the emission control devices, including particulate filters (if any), are not affected. In the case of multi-stage type-approval, the new CO_2 value shall be calculated in accordance with the CO_2 interpolation method, using the relevant data from the completed vehicle. Alternatively, the new CO_2 value shall be calculated on the basis of the parameters of the completed vehicle as specified in paragraph 3.2.4 of Annex B7 to UN Regulation 154 and using the road load matrix tool supplied by the manufacturer of the base vehicle. If the tool is not available or CO_2 interpolation is impractical, the CO_2 value of Vehicle High from the base vehicle shall be used, at the request of the manufacturer responsible for the conversion, and with the agreement of the approval authority.

▼M4

Item	Subject	Regulatory act	M_1
G3	Tailpipe emissions of engine in lab	Regulation (EC) No 595/2009	X Modification in the exhaust system is permitted without any further test of tailpipe emissions and CO_2/fuel consumption provided that the emission control devices, including particulate filters (if any), are not affected. If the evaporative control devices are kept as fitted by the manufacturer of the original (complete or incomplete) vehicle, no new evaporative test is required on the modified vehicle.
G3a	Determination of specific CO_2 emissions and fuel consumption of vehicle	Regulation (EC) No 595/2009	Not in scope
G3b	Determination of specific energy efficiency performance of trailer	Regulation (EC) No 595/2009	Not in scope
G4	Tailipipe emissions on the road	Regulation (EC) No 715/2007 Regulation (EC) No 595/2009	G In case of conversion of a vehicle (e.g. in a multi-stage type-approval process), the manufacturer responsible for the conversion needs to consult the original (complete or incomplete) vehicle manufacturer to get confirmation that the converted vehicle is covered by the emission approval of the original (complete or incomplete) vehicle. In such a case it is acceptable if the reference mass of the converted vehicle will exceed 2 840 kg.
G5	Durability of tailpipe emissions	Regulation (EC) No 715/2007 Regulation (EC) No 595/2009	G
G6	Crankcase emissions	Regulation (EC) No 715/2007 Regulation (EC) No 595/2009	G
G7	Evaporative emissions	Regulation (EC) No 715/2007	G If the evaporative control devices are kept as fitted by the manufacturer of the original (complete or incomplete) vehicle, no new evaporative test is required on the modified vehicle.
G8	Low-temperature-tailpipe emissions in lab	Regulation (EC) No 715/2007	G
G9	On-board diagnostics	Regulation (EC) No 715/2007 Regulation (EC) No 595/2009	G

▼M4

Item	Subject	Regulatory act	M_1
G10	Absence of defeat device	Regulation (EC) No 715/2007 Regulation (EC) No 595/2009	G
G11	Auxiliary emissions strategies	Regulation (EC) No 715/2007 Regulation (EC) No 595/2009	G
G12	Anti-tampering	Regulation (EC) No 715/2007 Regulation (EC) No 595/2009	G
G13	Recyclability	Directive 2005/64/EC	n/a However, Annex V on prohibition of reuse of the specified component parts shall apply.
G14	Air-conditioning systems	Directive 2006/40/EC	G
▼M8			
G16	Measurement of engine power	Regulation (EC) No 715/2007	G
G17	Operation of systems using consumable reagent and pollution control systems	Regulation (EC) No 715/2007	G
GA	ENVIRONMENTAL PERFORMANCE AND EMISSIONS for ‘Euro 7’ and ‘Euro 7ext’ vehicles, separate technical units and components (*2)		
GA1	Sound level	Regulation (EU) No 540/2014	G Modification of the exhaust system length is permitted without the need for retesting, provided that the exhaust back pressure remains similar.
GA2	Tailpipe emissions of vehicle in lab	Regulation (EU) 2024/1257 Commission Implementing Regulation (EU) 2025/1706	G Modification in the exhaust system is permitted without any further test of tailpipe emissions provided that the emission control devices, including particulate filters (if any), are not affected. In case of conversion of a vehicle (e.g. in a multi-stage type-approval process), the manufacturer responsible for the conversion needs to consult the original (complete or incomplete) vehicle manufacturer to get confirmation that the converted vehicle is covered by the emission approval of the original (complete or incomplete) vehicle.

▼M8

Item	Subject	Regulatory act	M_1
GA2a	Determination of specific CO_2 emissions and fuel consumption of vehicle and device for monitoring on board the vehicle the consumption of fuel and/or electric energy	Regulation (EU) 2024/1257 Commission Implementing Regulation (EU) 2025/1706	G Modification in the exhaust system is permitted without any further test of CO_2/fuel consumption provided that the emission control devices, including particulate filters (if any), are not affected. In the case of multi-stage type-approval, the new CO_2 value shall be calculated in accordance with the CO_2 interpolation method, using the relevant data from the completed vehicle. Alternatively, the new CO_2 value shall be calculated on the basis of the parameters of the completed vehicle as specified in paragraph 3.2.4 of Annex B7 to UN Regulation 154 and using the road load matrix tool supplied by the manufacturer of the base vehicle. If the tool is not available or CO_2 interpolation is impractical, the CO_2 value of Vehicle High from the base vehicle shall be used, at the request of the manufacturer responsible for the conversion.
GA4	Tailpipe emissions on the road	Regulation (EU) 2024/1257 Commission Implementing Regulation (EU) 2025/1706	G In case of conversion of a vehicle (e.g. in a multi-stage type-approval process), the manufacturer responsible for the conversion needs to consult the original (complete or incomplete) vehicle manufacturer to get confirmation that the converted vehicle is covered by the emission approval of the original (complete or incomplete) vehicle.
GA5	Durability of tailpipe emissions	Regulation (EU) 2024/1257 Commission Implementing Regulation (EU) 2025/1706	G
GA6	Crankcase emissions	Regulation (EU) 2024/1257 Commission Implementing Regulation (EU) 2025/1706	G
GA7	Evaporative emissions	Regulation (EU) 2024/1257 Commission Implementing Regulation (EU) 2025/1706	G If the evaporative control devices are kept as fitted by the manufacturer of the original (complete or incomplete) vehicle, no new evaporative test is required on the modified vehicle.
GA8	Low-temperature tailpipe emissions in lab	Regulation (EU) 2024/1257 Commission Implementing Regulation (EU) 2025/1706	G
GA9	On-board diagnostics	Regulation (EU) 2024/1257 Commission Implementing Regulation (EU) 2025/1706	G

▼M8

Item	Subject	Regulatory act	M_1
GA10	Absence of manipulation devices and strategies	Regulation (EU) 2024/1257 Commission Implementing Regulation (EU) 2025/1706 Commission Implementing Regulation (EU) 2025/1707	G
GA11	Auxiliary emissions strategies	Regulation (EU) 2024/1257 Commission Implementing Regulation (EU) 2025/1706	G
GA12	Anti-tampering, security and cybersecurity	Regulation (EU) 2024/1257 Commission Implementing Regulation (EU) 2025/1706	G
GA13	Recyclability	Directive 2005/64/EC	n/a However, Annex V on prohibition of reuse of the specified component parts shall apply.
GA14	Air-conditioning systems	Directive 2006/40/EC	G
GA16	Measurement of engine power	Regulation (EU) 2024/1257 Commission Implementing Regulation (EU) 2025/1706	G
GA17	Operation of systems using consumable reagent and pollution control systems	Regulation (EU) 2024/1257 Commission Implementing Regulation (EU) 2025/1706	G
GA18	On-board monitoring (OBM), in-vehicle display of environmental data and environmental vehicle passport	Regulation (EU) 2024/1257 Commission Implementing Regulation (EU) 2025/1707	G

▼M4

H	ACCESS TO VEHICLE INFORMATION AND SOFTWARE UPDATE		
H1	Access to vehicle OBD information and vehicle repair and maintenance information	Regulation (EU) 2018/858, Articles 61 to 66 and Annex X	X

▼M4

Item	Subject	Regulatory act	M_1
H2	Software update	Regulation (EU) 2018/858, Annex IV UN Regulation No 156	X

(*1) For light-duty vehicles in accordance with Regulation (EC) No 715/2007 (Euro 6 vehicles) or heavy-duty vehicles in accordance with Regulation (EC) No 595/2009 (Euro VI vehicles), compliance with items G2 to G12, G16 and G17 is mandatory, however, only a single vehicle emissions type-approval either under Regulation (EC) No 715/2007 or under Regulation (EC) No 595/2009 is foreseen depending on the scope.

(*2) For vehicles in accordance with Regulation (EU) 2024/1257 (Euro 7 or Euro 7ext vehicles), a collection of type-approvals and/or declarations of compliance is necessary as set out in the implementing legislation refered to in items GA2 to GA18 (excluding items GA13 and GA14). Requirements for Euro 7ext vehicles are those indicated in the column for N1 category vehicles.

▼M4

Appendix 4

Other special purpose vehicles

(including special group, multi-equipment carrier and trailer caravans)

Item	Subject	Regulatory act	M_2	M_3	N_1	N_2	N_3	O_1	O_2	O_3	O_4
A	RESTRAINT SYSTEMS, CRASH TESTING, FUEL SYSTEM INTEGRITY AND HIGH VOLTAGE ELECTRICAL SAFETY										
A1	Interior fittings	Regulation (EU) 2019/2144	not in scope	not in scope	not in scope	not in scope	not in scope	not in scope	not in scope	not in scope	not in scope
A2	Seats and head restraints	Regulation (EU) 2019/2144	X Application limited to seats designated for normal use when the vehicle is used on a public road. Seats that are not designated as such shall be clearly and permanently identified to users, either by means of a pictogram or a sign with an appropriate text.	X Application limited to seats designated for normal use when the vehicle is used on a public road. Seats that are not designated as such shall be clearly and permanently identified to users, either by means of a pictogram or a sign with an appropriate text.	X Application limited to seats designated for normal use when the vehicle is used on a public road. Seats that are not designated as such shall be clearly and permanently identified to users, either by means of a pictogram or a sign with an appropriate text.	X Application limited to seats designated for normal use when the vehicle is used on a public road. Seats that are not designated as such shall be clearly and permanently identified to users, either by means of a pictogram or a sign with an appropriate text.	X Application limited to seats designated for normal use when the vehicle is used on a public road. Seats that are not designated as such shall be clearly and permanently identified to users, either by means of a pictogram or a sign with an appropriate text.	not in scope	not in scope	not in scope	not in scope

▼M4

Item	Subject	Regulatory act	M_2	M_3	N_1	N_2	N_3	O_1	O_2	O_3	O_4
A3	Bus seats	Regulation (EU) 2019/2144	X Application limited to seats designated for normal use when the vehicle is used on a public road. Seats that are not designated as such shall be clearly and permanently identified to users, either by means of a pictogram or a sign with an appropriate text.	X Application limited to seats designated for normal use when the vehicle is used on a public road. Seats that are not designated as such shall be clearly and permanently identified to users, either by means of a pictogram or a sign with an appropriate text.	not in scope	not in scope	not in scope	not in scope	not in scope	not in scope	not in scope
A4	Safety-belt anchorages	Regulation (EU) 2019/2144	X Application limited to seats designated for normal use when the vehicle is used on a public road.	X Application limited to seats designated for normal use when the vehicle is used on a public road.	X Application limited to seats designated for normal use when the vehicle is used on a public road.	X Application limited to seats designated for normal use when the vehicle is used on a public road.	X Application limited to seats designated for normal use when the vehicle is used on a public road.	not in scope	not in scope	not in scope	not in scope

▼M4

Item	Subject	Regulatory act	M_2	M_3	N_1	N_2	N_3	O_1	O_2	O_3	O_4
A5	Safety-belts and restraint systems	Regulation (EU) 2019/2144	X Application limited to seats designated for normal use when the vehicle is used on a public road.	X Application limited to seats designated for normal use when the vehicle is used on a public road.	X Application limited to seats designated for normal use when the vehicle is used on a public road.	X Application limited to seats designated for normal use when the vehicle is used on a public road.	X Application limited to seats designated for normal use when the vehicle is used on a public road.	not in scope	not in scope	not in scope	not in scope
A6	Safety-belt reminders	Regulation (EU) 2019/2144	X	X	X	X	X	not in scope	not in scope	not in scope	not in scope
A7	Partitioning systems	Regulation (EU) 2019/2144	equipment	equipment	equipment	equipment	equipment	equipment	equipment	equipment	equipment
A8	Child restraint anchorages	Regulation (EU) 2019/2144	IF	IF	IF	IF	IF	not in scope	not in scope	not in scope	not in scope
A9	Child restraint systems (IF)	Regulation (EU) 2019/2144	equipment	equipment	equipment	equipment	equipment	equipment	equipment	equipment	equipment
A10	Enhanced child restraint systems (IF)	Regulation (EU) 2019/2144	equipment	equipment	equipment	equipment	equipment	equipment	equipment	equipment	equipment

▼M4

Item	Subject	Regulatory act	M_2	M_3	N_1	N_2	N_3	O_1	O_2	O_3	O_4
A11	Front underrun protection	Regulation (EU) 2019/2144	not in scope	not in scope	not in scope	X	X	not in scope	not in scope	not in scope	not in scope
A12	Rear underrun protection	Regulation (EU) 2019/2144	X	X	A	A	A	X	X	X	X
A13	Lateral protection	Regulation (EU) 2019/2144	not in scope	not in scope	not in scope	X	X	not in scope	not in scope	X	X
A14	Fuel tank safety (IF)	Regulation (EU) 2019/2144	X Modification to the routing and length of the refuelling duct and re-positioning of the original tank inboard is permissible provided all installation requirements are met.	X Modification to the routing and length of the refuelling duct and re-positioning of the original tank inboard is permissible provided all installation requirements are met.	X Modification to the routing and length of the refuelling duct and re-positioning of the original tank inboard is permissible provided all installation requirements are met.	X Modification to the routing and length of the refuelling duct and re-positioning of the original tank inboard is permissible provided all installation requirements are met.	X Modification to the routing and length of the refuelling duct and re-positioning of the original tank inboard is permissible provided all installation requirements are met.	X	X	X	X
A15	Liquified petroleum gas safety (IF)	Regulation (EU) 2019/2144	G	X	G	G	X	not in scope	not in scope	not in scope	not in scope

▼M4

Item	Subject	Regulatory act	M_2	M_3	N_1	N_2	N_3	O_1	O_2	O_3	O_4
A16	Compressed and liquified natural gas safety (IF)	Regulation (EU) 2019/2144	G	X	G	G	X	not in scope	not in scope	not in scope	not in scope
A17	Hydrogen safety (IF)	Regulation (EU) 2019/2144	G	X	G	G	X	not in scope	not in scope	not in scope	not in scope
A18	Hydrogen system material qualification (IF)	Regulation (EU) 2019/2144	X	X	X	X	X	not in scope	not in scope	not in scope	not in scope
A19	In-use electric safety (IF)	Regulation (EU) 2019/2144	G	X	G	G	X	not in scope	not in scope	not in scope	not in scope
A20	Frontal off-set impact	Regulation (EU) 2019/2144	not in scope	not in scope	G Completed vehicles are deemed to comply with the frontal off-set impact requirements provided that compliance has been demonstrated for at least the van or chassis-cab configuration, with appropriate powertrain, as part of a previous-stage type-approval,	not in scope	not in scope	not in scope	not in scope	not in scope	not in scope

▼M4

Item	Subject	Regulatory act	M_2	M_3	N_1	N_2	N_3	O_1	O_2	O_3	O_4
					irrespective of the mass in running order increase.						
A21	Frontal full-width impact	Regulation (EU) 2019/2144	not in scope	not in scope	G Completed vehicles are deemed to comply with the frontal full-width impact requirements provided that compliance has been demonstrated for at least the van or chassis-cab configuration, with appropriate powertrain, as part of a previous-stage type-approval, irrespective of the mass in running order increase.	not in scope	not in scope	not in scope	not in scope	not in scope	not in scope

▼M4

Item	Subject	Regulatory act	M_2	M_3	N_1	N_2	N_3	O_1	O_2	O_3	O_4
A22	Protective steering	Regulation (EU) 2019/2144	not in scope	not in scope	G	not in scope	not in scope	not in scope	not in scope	not in scope	not in scope
A23	Replacement airbag	Regulation (EU) 2019/2144	equipment	equipment	equipment	equipment	equipment	equipment	equipment	equipment	equipment
A24	Cab impact	Regulation (EU) 2019/2144	not in scope	not in scope	A + G Completed vehicles are deemed to comply with cab impact requirements provided that compliance has been demonstrated for at least the van or chassis-cab configuration, with appropriate powertrain, as part of a previous-stage type-approval, irrespective of the mass in running order increase.	A	A	not in scope	not in scope	not in scope	not in scope

▼M4

Item	Subject	Regulatory act	M_2	M_3	N_1	N_2	N_3	O_1	O_2	O_3	O_4
A25	Side impact	Regulation (EU) 2019/2144	not in scope	not in scope	G Completed vehicles are deemed to comply with side impact requirements provided that compliance has been demonstrated for at least the van or chassis-cab configuration, with appropriate powertrain, as part of a previous-stage type-approval, irrespective of the mass in running order increase.	not in scope	not in scope	not in scope	not in scope	not in scope	not in scope
A26	Pole side impact	Regulation (EU) 2019/2144	not in scope	not in scope	A + G Completed vehicles are deemed to comply with pole side impact requirements provided that compliance has been demonstrated for at least the van or chassis-cab configuration, with appropriate	not in scope	not in scope	not in scope	not in scope	not in scope	not in scope

▼M4

Item	Subject	Regulatory act	M_2	M_3	N_1	N_2	N_3	O_1	O_2	O_3	O_4
					powertrain, as part of a previous-stage type-approval, irrespective of the mass in running order increase.						
A27	Rear impact	Regulation (EU) 2019/2144	not in scope	not in scope	A + G Completed vehicles are deemed to comply with rear impact requirements provided that compliance has been demonstrated for at least the van or chassis-cab configuration, with appropriate	not in scope	not in scope	not in scope	not in scope	not in scope	not in scope

▼M4

Item	Subject	Regulatory act	M_2	M_3	N_1	N_2	N_3	O_1	O_2	O_3	O_4
					powertrain, as part of a previous-stage type-approval, irrespective of the mass in running order increase.						
A28	112-based eCall in-vehicles systems	Regulation (EU) 2015/758	not in scope	not in scope	G	not in scope	not in scope	not in scope	not in scope	not in scope	not in scope
B	VULNERABLE ROAD USERS, VISION AND VISIBILITY										
B1	Pedestrian leg and head protection	Regulation (EU) 2019/2144	not in scope	not in scope	A	not in scope	not in scope	not in scope	not in scope	not in scope	not in scope
B2	Enlarged head impact zone	Regulation (EU) 2019/2144	not in scope	not in scope	A	not in scope	not in scope	not in scope	not in scope	not in scope	not in scope
B3	Frontal protection system	Regulation (EU) 2019/2144	equipment	equipment	equipment	equipment	equipment	equipment	equipment	equipment	equipment

▼M4

Item	Subject	Regulatory act	M_2	M_3	N_1	N_2	N_3	O_1	O_2	O_3	O_4
B4	Advanced emergency braking for pedestrians and cyclists ahead	Regulation (EU) 2019/2144	not in scope	not in scope	A May be partly exempted if non-removable equipment on the front of the cab prevents full compliance with the requirements and may be fully exempted if it is impossible to meet these requirements	not in scope	not in scope	not in scope	not in scope	not in scope	not in scope
B5	Pedestrian and cyclist collision warning	Regulation (EU) 2019/2144	X	X	not in scope	A May be partly exempted if non-removable equipment on the front of the cab prevents full compliance with the requirements and may be fully exempted if it is impossible to meet these requirements	A May be partly exempted if non-removable equipment on the front of the cab prevents full compliance with the requirements and may be fully exempted if it is impossible to meet these requirements	not in scope	not in scope	not in scope	not in scope

▼M4

Item	Subject	Regulatory act	M_2	M_3	N_1	N_2	N_3	O_1	O_2	O_3	O_4
B6	Blind spot information system	Regulation (EU) 2019/2144	X	X	not in scope	X	X	not in scope	not in scope	not in scope	not in scope
B7	Reversing detection	Regulation (EU) 2019/2144	X	X	A May be partly exempted if non-removable equipment on the rear of the vehicle prevents full compliance with the requirements and may be fully exempted if it is impossible to meet these requirements	A May be partly exempted if non-removable equipment on the rear of the vehicle prevents full compliance with the requirements and may be fully exempted if it is impossible to meet these requirements	A May be partly exempted if non-removable equipment on the rear of the vehicle prevents full compliance with the requirements and may be fully exempted if it is impossible to meet these requirements	not in scope	not in scope	not in scope	not in scope
B8	Forward vision	Regulation (EU) 2019/2144	not in scope	not in scope	A May be partly exempted if non-removable equipment on the front of the cab prevents full compliance with the requirements and may be fully exempted if it is impossible to meet these requirements	not in scope	not in scope	not in scope	not in scope	not in scope	not in scope

▼M4

Item	Subject	Regulatory act	M_2	M_3	N_1	N_2	N_3	O_1	O_2	O_3	O_4
B9	Heavy-duty vehicles direct vision	Regulation (EU) 2019/2144	no requirements yet	no requirements yet	not in scope	no requirements yet	no requirements yet	not in scope	not in scope	not in scope	not in scope
B10	Safety glazing	Regulation (EU) 2019/2144	X For all glazing other than the windscreen and side windows located forward of the driver's eye points, the material may be either of safety glass or rigid plastic glazing.	X For all glazing other than the windscreen and side windows located forward of the driver's eye points, the material may be either of safety glass or rigid plastic glazing.	X For all glazing other than the windscreen and side windows located forward of the driver's eye points, the material may be either of safety glass or rigid plastic glazing.	X For all glazing other than the windscreen and side windows located forward of the driver's eye points, the material may be either of safety glass or rigid plastic glazing.	X For all glazing other than the windscreen and side windows located forward of the driver's eye points, the material may be either of safety glass or rigid plastic glazing.	X Glazing material may be either of safety glass or rigid plastic glazing.	X Glazing material may be either of safety glass or rigid plastic glazing.	X Glazing material may be either of safety glass or rigid plastic glazing.	X Glazing material may be either of safety glass or rigid plastic glazing.
B11	Defrost/demist	Regulation (EU) 2019/2144	X Vehicles shall be fitted with an adequate windscreen defrosting and demisting device	X Vehicles shall be fitted with an adequate windscreen defrosting and demisting device	X Vehicles shall be fitted with an adequate windscreen defrosting and demisting device	X Vehicles shall be fitted with an adequate windscreen defrosting and demisting device	X Vehicles shall be fitted with an adequate windscreen defrosting and demisting device	not in scope	not in scope	not in scope	not in scope
B12	Wash/wipe	Regulation (EU) 2019/2144	X Vehicles shall be fitted with adequate windscreen washing and wiping devices	X Vehicles shall be fitted with adequate windscreen washing and wiping devices	X Vehicles shall be fitted with adequate windscreen washing and wiping devices	X Vehicles shall be fitted with adequate windscreen washing and wiping devices	X Vehicles shall be fitted with adequate windscreen washing and wiping devices	not in scope	not in scope	not in scope	not in scope

▼M4

Item	Subject	Regulatory act	M_2	M_3	N_1	N_2	N_3	O_1	O_2	O_3	O_4
B13	Indirect vision devices	Regulation (EU) 2019/2144	X	X	X	X	X	not in scope	not in scope	not in scope	not in scope
B14	Acoustic Vehicle Alerting Systems	Regulation (EU) No 540/2014	X	X	X	X	X	not in scope	not in scope	not in scope	not in scope
C	VEHICLE CHASSIS, BRAKING, TYRES AND STEERING										
C1	Steering equipment	Regulation (EU) 2019/2144	X	X	X	X	X	X	X	X	X
C2	Lane departure warning	Regulation (EU) 2019/2144	n/a	n/a	not in scope	n/a	n/a	not in scope	not in scope	not in scope	not in scope
C3	Emergency lane keeping	Regulation (EU) 2019/2144	not in scope	not in scope	A May be partly exempted if non-removable equipment on the front of the cab prevents full compliance with the requirements and may be fully exempted if it is impossible to meet these requirements	not in scope	not in scope	not in scope	not in scope	not in scope	not in scope

▼M4

Item	Subject	Regulatory act	M_2	M_3	N_1	N_2	N_3	O_1	O_2	O_3	O_4
C4	Braking	Regulation (EU) 2019/2144	G	G	G	G Anti-lock braking system is not mandatory for vehicles with hydrostatic drive.	G Anti-lock braking system is not mandatory for vehicles with hydrostatic drive.	X	X	X	X
C5	Replacement braking parts	Regulation (EU) 2019/2144	equipment	equipment	equipment	equipment	equipment	equipment	equipment	equipment	equipment
C6	Brake assist	Regulation (EU) 2019/2144	not in scope	not in scope	A	not in scope	not in scope	not in scope	not in scope	not in scope	not in scope
C7	Stability control	Regulation (EU) 2019/2144	n/a	n/a	n/a	n/a	n/a	not in scope	not in scope	X	X
C8	Advanced emergency braking on heavy-duty vehicles	Regulation (EU) 2019/2144	n/a	n/a	not in scope	n/a	n/a	not in scope	not in scope	not in scope	not in scope

▼M4

Item	Subject	Regulatory act	M_2	M_3	N_1	N_2	N_3	O_1	O_2	O_3	O_4
C9	Advanced emergency braking on light-duty vehicles	Regulation (EU) 2019/2144	not in scope	not in scope	A May be partly exempted if non-removable equipment on the front of the cab prevents full compliance with the requirements and may be fully exempted if it is impossible to meet these requirements	not in scope	not in scope	not in scope	not in scope	not in scope	not in scope
C10	Tyre safety and environmental performance	Regulation (EU) 2019/2144	X	X	X	X	X	X	X	X	X
C11	Spare wheels and run-flat systems (IF)	Regulation (EU) 2019/2144	not in scope	not in scope	X	not in scope	not in scope	not in scope	not in scope	not in scope	not in scope
C12	Retreaded tyres	Regulation (EU) 2019/2144	equipment	equipment	equipment	equipment	equipment	equipment	equipment	equipment	equipment
C13	Tyre pressure monitoring for light-duty vehicles	Regulation (EU) 2019/2144	not in scope	not in scope	A	not in scope	not in scope	not in scope	not in scope	not in scope	not in scope

▼M4

Item	Subject	Regulatory act	M_2	M_3	N_1	N_2	N_3	O_1	O_2	O_3	O_4
C14	Tyre pressure monitoring for heavy-duty vehicles	Regulation (EU) 2019/2144	X	X	not in scope	X	X	not in scope	not in scope	X	X
C15	Tyre installation	Regulation (EU) 2019/2144	X	X	X	X	X	X	X	X	X
C16	Replacement wheels	Regulation (EU) 2019/2144	equipment	equipment	equipment	equipment	equipment	equipment	equipment	equipment	equipment
D	ON-BOARD INSTRUMENTS, ELECTRICAL SYSTEM, VEHICLE LIGHTING AND PROTECTION AGAINST UNAUTHORISED USE, INCLUDING CYBERATTACKS										
D1	Audible warning	Regulation (EU) 2019/2144	X	X	X	X	X	not in scope	not in scope	not in scope	not in scope
D2	Radio interference (electromagnetic compatibility)	Regulation (EU) 2019/2144	X	X	X	X	X	X	X	X	X
D3	Protection against unauthorised use, immobiliser and alarm systems	Regulation (EU) 2019/2144	IF G	IF G	X	IF G	IF G	not in scope	not in scope	not in scope	not in scope
D4	Protection of vehicle against cyberattacks	Regulation (EU) 2019/2144	X	X	X	X	X	not in scope	not in scope	not in scope	not in scope
D5	Speedometer	Regulation (EU) 2019/2144	X	X	X	X	X	not in scope	not in scope	not in scope	not in scope

▼M4

Item	Subject	Regulatory act	M_2	M_3	N_1	N_2	N_3	O_1	O_2	O_3	O_4
D6	Odometer	Regulation (EU) 2019/2144	X	X	X	X	X	not in scope	not in scope	not in scope	not in scope
D7	Speed limitation devices	Regulation (EU) 2019/2144	X	X	not in scope	X	X	not in scope	not in scope	not in scope	not in scope
D8	Intelligent speed assistance	Regulation (EU) 2019/2144	A May be partly exempted if non-removable equipment on the front of the cab prevents full compliance with the requirements and may be fully exempted if it is impossible to meet these requirements	A May be partly exempted if non-removable equipment on the front of the cab prevents full compliance with the requirements and may be fully exempted if it is impossible to meet these requirements	A May be partly exempted if non-removable equipment on the front of the cab prevents full compliance with the requirements and may be fully exempted if it is impossible to meet these requirements	A May be partly exempted if non-removable equipment on the front of the cab prevents full compliance with the requirements and may be fully exempted if it is impossible to meet these requirements	A May be partly exempted if non-removable equipment on the front of the cab prevents full compliance with the requirements and may be fully exempted if it is impossible to meet these requirements	not in scope	not in scope	not in scope	not in scope
D9	Identification of controls, tell-tales and indicators	Regulation (EU) 2019/2144	X	X	X	X	X	not in scope	not in scope	not in scope	not in scope
D10	Heating systems	Regulation (EU) 2019/2144	X	X	X	X	X	X	X	X	X

▼M4

Item	Subject	Regulatory act	M_2	M_3	N_1	N_2	N_3	O_1	O_2	O_3	O_4
D11	Light signalling devices	Regulation (EU) 2019/2144	X	X	X	X	X	X	X	X	X
D12	Road illumination devices	Regulation (EU) 2019/2144	X	X	X	X	X	X	X	X	X
D13	Retro-reflective devices	Regulation (EU) 2019/2144	X	X	X	X	X	X	X	X	X
D14	Light sources	Regulation (EU) 2019/2144	X	X	X	X	X	X	X	X	X
D15	Installation of light signalling, road illumination and retro-reflective devices	Regulation (EU) 2019/2144	A Provided that all mandatory lighting devices are installed and that the geometric visibility is not affected	A Provided that all mandatory lighting devices are installed and that the geometric visibility is not affected	A Provided that all mandatory lighting devices are installed and that the geometric visibility is not affected	A Provided that all mandatory lighting devices are installed and that the geometric visibility is not affected	A Provided that all mandatory lighting devices are installed and that the geometric visibility is not affected	A Provided that all mandatory lighting devices are installed and that the geometric visibility is not affected	A Provided that all mandatory lighting devices are installed and that the geometric visibility is not affected	A Provided that all mandatory lighting devices are installed and that the geometric visibility is not affected	A Provided that all mandatory lighting devices are installed and that the geometric visibility is not affected
D16	Emergency stop signal	Regulation (EU) 2019/2144	X Only for vehicles fitted with electronically controlled anti-lock braking system	X Only for vehicles fitted with electronically controlled anti-lock braking system	X Only for vehicles fitted with electronically controlled anti-lock braking system	X Only for vehicles fitted with electronically controlled anti-lock braking system	X Only for vehicles fitted with electronically controlled anti-lock braking system	not in scope	not in scope	not in scope	not in scope

▼M4

Item	Subject	Regulatory act	M_2	M_3	N_1	N_2	N_3	O_1	O_2	O_3	O_4
D17	Headlamp cleaners (IF)	Regulation (EU) 2019/2144	IF	IF	IF	IF	IF	not in scope	not in scope	not in scope	not in scope
D18	Gear shift indicator	Regulation (EU) 2019/2144	not in scope	not in scope	not in scope	not in scope	not in scope	not in scope	not in scope	not in scope	not in scope
E	DRIVER AND SYSTEM BEHAVIOUR										
E1	Alcohol interlock installation facilitation	Regulation (EU) 2019/2144	X	X	X	X	X	not in scope	not in scope	not in scope	not in scope
E2	Driver drowsiness and attention warning	Regulation (EU) 2019/2144	A	A	A	A	A	not in scope	not in scope	not in scope	not in scope
▼M8 E3	Advanced driver distraction warning	Regulation (EU) 2-2019/2144	A Date for refusal to grant EU type- approval: 7 July 2026 Date for the prohibition of the registration of vehicles: 7 July 2028	A Date for refusal to grant EU type- approval: 7 July 2026 Date for the prohibition of the registration of vehicles: 7 July 2028	A Date for refusal to grant EU type- approval: 7 July 2026 Date for the prohibition of the registration of vehicles: 7 July 2028	A Date for refusal to grant EU type- approval: 7 July 2026 Date for the prohibition of the registration of vehicles: 7 July 2028	A Date for refusal to grant EU type- approval: 7 July 2026 Date for the prohibition of the registration of vehicles: 7 July 2028	not in scope	not in scope	not in scope	not in scope

▼M4

Item	Subject	Regulatory act	M_2	M_3	N_1	N_2	N_3	O_1	O_2	O_3	O_4
E4	Driver availability monitoring system (in case of automated vehicles)	Regulation (EU) 2019/2144	not in scope	not in scope	IF	not in scope	not in scope	not in scope	not in scope	not in scope	not in scope
E5	Event data recorder	Regulation (EU) 2019/2144	no requirement yet	no requirement yet	A	no requirement yet	no requirement yet	not in scope	not in scope	not in scope	not in scope
E6	Systems to replace driver's control (in case of automated vehicles)	Regulation (EU) 2019/2144	no requirement yet	no requirement yet	no requirement yet	no requirement yet	no requirement yet	not in scope	not in scope	not in scope	not in scope
E7	Systems to provide the vehicle with information on state of vehicle and surrounding area (in case of automated vehicles)	Regulation (EU) 2019/2144	no requirement yet	no requirement yet	no requirement yet	no requirement yet	no requirement yet	not in scope	not in scope	not in scope	not in scope
E8	Platooning (IF)	Regulation (EU) 2019/2144	no requirement yet	no requirement yet	no requirement yet	no requirement yet	no requirement yet	not in scope	not in scope	not in scope	not in scope

▼M4

Item	Subject	Regulatory act	M_2	M_3	N_1	N_2	N_3	O_1	O_2	O_3	O_4
E9	Systems to provide safety information to other road users (in case of automated vehicles)	Regulation (EU) 2019/2144	no requirement yet	no requirement yet	no requirement yet	no requirement yet	no requirement yet	not in scope	not in scope	not in scope	not in scope
F	GENERAL VEHICLE CONSTRUCTION AND FEATURES										
F1	Registration plate space	Regulation (EU) 2019/2144	X	X	X	X	X	X	X	X	X
F2	Reversing motion	Regulation (EU) 2019/2144	X	X	X	X	X	not in scope	not in scope	not in scope	not in scope
F3	Door latches and hinges	Regulation (EU) 2019/2144	not in scope	not in scope	X Application limited to doors giving access to seats designated for normal use when the vehicle is used on a public road and where the distance between the R-point of the seat and the average	not in scope	not in scope	not in scope	not in scope	not in scope	not in scope

▼M4

Item	Subject	Regulatory act	M_2	M_3	N_1	N_2	N_3	O_1	O_2	O_3	O_4
					plane of the door surface, measured perpendicular to the longitudinal medium plane of the vehicle, does not exceed 500 mm.						
F4	Door entry steps, handholds and running boards	Regulation (EU) 2019/2144	X	X	B	B	B	not in scope	not in scope	not in scope	not in scope
F5	External projections	Regulation (EU) 2019/2144	not in scope	not in scope	not in scope	not in scope	not in scope	not in scope	not in scope	not in scope	not in scope
F6	External projections of commercial vehicle cabs	Regulation (EU) 2019/2144	not in scope	not in scope	X	X	X	not in scope	not in scope	not in scope	not in scope
F7	Statutory plate and vehicle identification number	Regulation (EU) 2019/2144	X	X	X	X	X	X	X	X	X

▼M4

Item	Subject	Regulatory act	M_2	M_3	N_1	N_2	N_3	O_1	O_2	O_3	O_4
F8	Towing devices	Regulation (EU) 2019/2144	A	A	A	A	A	not in scope	not in scope	not in scope	not in scope
F9	Wheel guards	Regulation (EU) 2019/2144	not in scope	not in scope	not in scope	not in scope	not in scope	not in scope	not in scope	not in scope	not in scope
F10	Spray suppression systems	Regulation (EU) 2019/2144	not in scope	not in scope	X	X	X	X	X	X	X
F11	Masses and dimensions	Regulation (EU) 2019/2144	X	X	X	X	X	X	X	X	X

▼M4

Item	Subject	Regulatory act	M_2	M_3	N_1	N_2	N_3	O_1	O_2	O_3	O_4
F12	Mechanical couplings	Regulation (EU) 2019/2144	IF X	IF X	IF X	IF X	IF X	X	X	X	X
F13	Vehicles intended for the transportation of dangerous goods (IF)	Regulation (EU) 2019/2144	not in scope	not in scope	X	X	X	X	X	X	X
F14	General bus construction	Regulation (EU) 2019/2144	X	X	not in scope	not in scope	not in scope	not in scope	not in scope	not in scope	not in scope
F15	Bus strength of superstructure	Regulation (EU) 2019/2144	X	X	not in scope	not in scope	not in scope	not in scope	not in scope	not in scope	not in scope
F16	Flammability in buses	Regulation (EU) 2019/2144	not in scope	X	not in scope	not in scope	not in scope	not in scope	not in scope	not in scope	not in scope
▼M8 G	ENVIRONMENTAL PERFORMANCE AND EMISSIONS for ‘Euro 6’ vehicles, for ‘Euro VI’ vehicles and separate technical units and components (*1)										
▼M4 G1	Sound level	Regulation (EU) No 540/2014	G Modification of exhaust system length after the last silencer not exceeding 2,0 m is permissible without any further test.	G Modification of exhaust system length after the last silencer not exceeding 2,0 m is permissible without any further test.	G Modification of exhaust system length after the last silencer not exceeding 2,0 m is permissible without any further test.	G Modification of exhaust system length after the last silencer not exceeding 2,0 m is permissible without any further test.	G Modification of exhaust system length after the last silencer not exceeding 2,0 m is permissible without any further test.	not in scope	not in scope	not in scope	not in scope

▼M4

Item	Subject	Regulatory act	M_2	M_3	N_1	N_2	N_3	O_1	O_2	O_3	O_4
G2	Tailpipe emissions of vehicle in lab	Regulation (EC) No 715/2007	X Modification of exhaust system length after the last silencer not exceeding 2,0 m is permissible without any further test.	not in scope	X Modification of exhaust system length after the last silencer not ex ceeding 2,0 m is permis-sible without any further test. Alternatively, Regulation (EU) 2016/1628 may also apply to vehicles with hydrostatic drive.	X Modification of exhaust system length after the last silencer not ex ceeding 2,0 m is permis-sible without any further test. Alternatively, Regulation (EU) 2016/1628 may also apply to vehicles with hydrostatic drive.	not in scope	not in scope	not in scope	not in scope	not in scope
G2a	Determination of specific CO_2 emissions and fuel consumption of vehicle and device for monitoring on board the vehicle the consumption of fuel and/or electric energy	Regulation (EC) No 715/2007	Not in scope	Not in scope	Not in scope	Not in scope	Not in scope	Not in scope	Not in scope	Not in scope	Not in scope

▼M4

Item	Subject	Regulatory act	M_2	M_3	N_1	N_2	N_3	O_1	O_2	O_3	O_4
G3	Tailpipe emissions of engine in lab	Regulation (EC) No 595/2009	X Modification of exhaust system length after the last silencer not exceeding 2,0 m is permissible without any further test.	X Modification of exhaust system length after the last silencer not exceeding 2,0 m is permissible without any further test.	X Modification of exhaust system length after the last silencer not exceeding 2,0 m is permissible without any further test. Alternatively, Regulation (EU) 2016/1628 may also apply to vehicles with hydrostatic drive.	X Modification of exhaust system length after the last silencer not exceeding 2,0 m is permissible without any further test. Alternatively, Regulation (EU) 2016/1628 may also apply to vehicles with hydrostatic drive.	X Modification of exhaust system length after the last silencer not exceeding 2,0 m is permissible without any further test. Alternatively, Regulation (EU) 2016/1628 may also apply to vehicles with hydrostatic drive.	not in scope	not in scope	not in scope	not in scope
G3a	Determination of specific CO_2 emissions and fuel consumption of vehicle	Regulation (EC) No 595/2009	Not in scope	Not in scope	Not in scope	Not in scope	Not in scope	Not in scope	Not in scope	Not in scope	Not in scope
G3b	Determination of specific energy efficiency performance of trailer	Regulation (EC) No 595/2009	Not in scope	Not in scope	Not in scope	Not in scope	Not in scope	Not in scope	Not in scope	Not in scope	Not in scope

▼M4

Item	Subject	Regulatory act	M_2	M_3	N_1	N_2	N_3	O_1	O_2	O_3	O_4
G4	Tailipipe emissions on the road	Regulation (EC) No 715/2007 Regulation (EC) No 595/2009	X Modification of exhaust system length after the last silencer not exceeding 2,0 m is permissible without any further test.	X Modification of exhaust system length after the last silencer not exceeding 2,0 m is permissible without any further test.	X Modification of exhaust system length after the last silencer not ex ceeding 2,0 m is permissible without any further test. Alternatively, Regulation (EU) 2016/1628 may also apply to vehicles with hydrostatic drive.	X Modification of exhaust system length after the last silencer not ex ceeding 2,0 m is permissible without any further test. Alternatively, Regulation (EU) 2016/1628 may also apply to vehicles with hydrostatic drive.	X Modification of exhaust system length after the last silencer not ex ceeding 2,0 m is permissible without any further test. Alternatively, Regulation (EU) 2016/1628 may also apply to vehicles with hydrostatic drive.	not in scope	not in scope	not in scope	not in scope
G5	Durability of tailpipe emissions	Regulation (EC) No 715/2007 Regulation (EC) No 595/2009	X Modification of exhaust system length after the last silencer not exceeding 2,0 m is permissible without any further test.	X Modification of exhaust system length after the last silencer not exceeding 2,0 m is permissible without any further test.	X Modification of exhaust system length after the last silencer not exceeding 2,0 m is permissible without any further test.	X Modification of exhaust system length after the last silencer not exceeding 2,0 m is permissible without any further test.	X Modification of exhaust system length after the last silencer not exceeding 2,0 m is permissible without any further test.	not in scope	not in scope	not in scope	not in scope
G6	Crankcase emissions	Regulation (EC) No 715/2007 Regulation (EC) No 595/2009	X	X	X	X	X	not in scope	not in scope	not in scope	not in scope

▼M4

Item	Subject	Regulatory act	M_2	M_3	N_1	N_2	N_3	O_1	O_2	O_3	O_4
G7	Evaporative emissions	Regulation (EC) No 715/2007	X	not in scope	X	X	not in scope	not in scope	not in scope	not in scope	not in scope
G8	Low-temperature tailpipe emissions in lab	Regulation (EC) No 715/2007	X	not in scope	X	X	not in scope	not in scope	not in scope	not in scope	not in scope
G9	On-board diagnostics	Regulation (EC) No 715/2007 Regulation (EC) No 595/2009	X	X	X	X	X	not in scope	not in scope	not in scope	not in scope
G10	Absence of defeat device	Regulation (EC) No 715/2007 Regulation (EC) No 595/2009	X	X	X	X	X	not in scope	not in scope	not in scope	not in scope
G11	Auxiliary emissions strategies	Regulation (EC) No 715/2007 Regulation (EC) No 595/2009	X	X	X	X	X	not in scope	not in scope	not in scope	not in scope

▼M4

Item	Subject	Regulatory act	M_2	M_3	N_1	N_2	N_3	O_1	O_2	O_3	O_4
G12	Anti-tampering	Regulation (EC) No 715/2007 Regulation (EC) No 595/2009	X	X	X	X	X	not in scope	not in scope	not in scope	not in scope
G13	Recyclability	Directive 2005/64/EC	not in scope	not in scope	n/a However, Annex V on prohibition of reuse of the specified component parts shall apply.	not in scope	not in scope	not in scope	not in scope	not in scope	not in scope
G14	Air-conditioning systems	Directive 2006/40/EC	not in scope	not in scope	X	not in scope	not in scope	not in scope	not in scope	not in scope	not in scope
▼M8 G16	Measurement of engine power	Regulation (EC) No 715/2007 Regulation (EC) No 595/2009	X	X	X	X	X	not in scope	not in scope	not in scope	not in scope

▼M8

Item	Subject	Regulatory act	M_2	M_3	N_1	N_2	N_3	O_1	O_2	O_3	O_4
G17	Operation of systems using consumable reagent and pollution control systems	Regulation (EC) No 715/2007 Regulation (EC) No 595/2009	X	X	X	X	X	not in scope	not in scope	not in scope	not in scope
GA	ENVIRONMENTAL PERFORMANCE AND EMISSIONS for 'Euro 7' and 'Euro 7ext' vehicles, separate technical units and components (*2)										
GA1	Sound level	Regulation (EU) No 540/2014	G Modification of exhaust system length after the last silencer not exceeding 2,0 m is permissible without any further test.	G Modification of exhaust system length after the last silencer not exceeding 2,0 m is permissible without any further test.	G Modification of exhaust system length after the last silencer not exceeding 2,0 m is permissible without any further test.	G Modification of exhaust system length after the last silencer not exceeding 2,0 m is permissible without any further test.	G Modification of exhaust system length after the last silencer not exceeding 2,0 m is permissible without any further test.	not in scope	not in scope	not in scope	not in scope
GA2	Tailpipe emissions of vehicle in lab	Regulation (EU) 2024/1257 Commission Implementing Regulation (EU) 2025/1706(*3)			X Modification of exhaust system length after the last silencer not exceeding 2,0 m is permissible without any further test.			not in scope	not in scope	not in scope	not in scope

▼M8

Item	Subject	Regulatory act	M_2	M_3	N_1	N_2	N_3	O_1	O_2	O_3	O_4
					Alternatively, Regulation (EU) 2016/1628 may also apply to vehicles with hydrostatic drive.						
GA2a	Determination of specific CO_2 emissions and fuel consumption of vehicle and device for monitoring on board the vehicle the consumption of fuel and/or electric energy	Regulation (EU) 2024/1257 Commission Implementing Regulation (EU) 2025/1706	not in scope	not in scope	not in scope	not in scope	not in scope	not in scope	not in scope	not in scope	not in scope
GA4	Tailpipe emissions on the road	Regulation (EU) 2024/1257 Commission Implementing Regulation (EU) 2025/1706			X Modification of exhaust system length after the last silencer not exceeding 2,0 m is permissible without any further test.			not in scope	not in scope	not in scope	not in scope

▼M8

Item	Subject	Regulatory act	M_2	M_3	N_1	N_2	N_3	O_1	O_2	O_3	O_4
					Alternatively, Regulation (EU) 2016/1628 may also apply to vehicles with hydrostatic drive						
GA5	Durability of tailpipe emissions	Regulation (EU) 2024/1257 Commission Implementing Regulation (EU) 2025/1706			X Modification of exhaust system length after the last silencer not exceeding 2,0 m is permissible without any further test.			not in scope	not in scope	not in scope	not in scope
GA6	Crankcase emissions	Regulation (EU) 2024/1257 Commission Implementing Regulation (EU) 2025/1706			X			not in scope	not in scope	not in scope	not in scope
GA7	Evaporative emissions	Regulation (EU) 2024/1257 Commission Implementing Regulation (EU) 2025/1706	not in scope	not in scope	X	not in scope	not in scope	not in scope	not in scope	not in scope	not in scope

▼M8

Item	Subject	Regulatory act	M_2	M_3	N_1	N_2	N_3	O_1	O_2	O_3	O_4
GA8	Low-temperature tailpipe emissions in lab	Regulation (EU) 2024/1257 Commission Implementing Regulation (EU) 2025/1706	not in scope	not in scope	X	not in scope	not in scope	not in scope	not in scope	not in scope	not in scope
GA9	On-board diagnostics	Regulation (EU) 2024/1257 Commission Implementing Regulation (EU) 2025/1706			X			not in scope	not in scope	not in scope	not in scope
GA10	Absence of manipulation devices and strategies	Regulation (EU) 2024/1257 Commission Implementing Regulation (EU) 2025/1706 Commission Implementing Regulation (EU) 2025/1707			X			not in scope	not in scope	not in scope	not in scope
GA11	Auxiliary emissions strategies	Regulation (EU) 2024/1257 Commission Implementing Regulation (EU) 2025/1706			X			not in scope	not in scope	not in scope	not in scope

▼M8

Item	Subject	Regulatory act	M_2	M_3	N_1	N_2	N_3	O_1	O_2	O_3	O_4
GA12	Anti-tampering, security and cybersecurity	Regulation (EU) 2024/1257 Commission Implementing Regulation (EU) 2025/1706			X			not in scope	not in scope	not in scope	not in scope
GA13	Recyclability	Directive 2005/64/EC	not in scope	not in scope	n/a However, Annex V on prohibition of reuse of the specified component parts shall apply.	not in scope	not in scope	not in scope	not in scope	not in scope	not in scope
GA14	Air-conditioning systems	Directive 2006/40/EC	not in scope	not in scope	X	X	not in scope	not in scope	not in scope	not in scope	not in scope
GA16	Measurement of engine power	Regulation (EU) 2024/1257 Commission Implementing Regulation (EU) 2025/1706			X			not in scope	not in scope	not in scope	not in scope

▼M8

Item	Subject	Regulatory act	M_2	M_3	N_1	N_2	N_3	O_1	O_2	O_3	O_4
GA17	Operation of systems using consumable reagent and pollution control systems	Regulation (EU) 2024/1257 Commission Implementing Regulation (EU) 2025/1706			X			not in scope	not in scope	not in scope	not in scope
GA18	On-board monitoring (OBM), in-vehicle display of environmental data and environmental vehicle passport	Regulation (EU) 2024/1257 Commission Implementing Regulation (EU) 2025/1707			X			not in scope	not in scope	not in scope	not in scope
▼M4 H	ACCESS TO VEHICLE INFORMATION AND SOFTWARE UPDATE										
H1	Access to vehicle OBD information and vehicle repair and maintenance information	Regulation (EU) 2018/858, Articles 61 to 66 and Annex X	X	X	X	X	X	X	X	X	X

▼M4

Item	Subject	Regulatory act	M_2	M_3	N_1	N_2	N_3	O_1	O_2	O_3	O_4
H2	Software update	Regulation (EU) 2018/858, Annex IV UN Regulation No 156	X	X	X	X	X	X	X		

(*1) For light-duty vehicles in accordance with Regulation (EC) No 715/2007 (Euro 6 vehicles) or heavy-duty vehicles in accordance with Regulation (EC) No 595/2009 (Euro VI vehicles), compliance with items G2 to G12, G16 and G17 is mandatory, however, only a single vehicle emissions type-approval either under Regulation (EC) No 715/2007 or under Regulation (EC) No 595/2009 is foreseen depending on the scope.

(*2) For vehicles in accordance with Regulation (EU) 2024/1257 (Euro 7 or Euro 7ext vehicles), a collection of type-approvals and/or declarations of compliance is necessary as set out in the implementing legislation refered to in items GA2 to GA18 (excluding items GA13 and GA14). Requirements for Euro 7ext vehicles are those indicated in the column for N1 category vehicles.

▼M4

Appendix 5

Mobile cranes

Item	Subject	Regulatory act	N_3
A	RESTRAINT SYSTEMS, CRASH TESTING, FUEL SYSTEM INTEGRITY AND HIGH VOLTAGE ELECTRICAL SAFETY		
A1	Interior fittings	Regulation (EU) 2019/2144	not in scope
A2	Seats and head restraints	Regulation (EU) 2019/2144	X Application limited to seats designated for normal use when the vehicle is used on a public road. Seats that are not designated as such shall be clearly and permanently identified to users, either by means of a pictogram or a sign with an appropriate text.
A3	Bus seats	Regulation (EU) 2019/2144	not in scope
A4	Safety-belt anchorages	Regulation (EU) 2019/2144	X Application limited to seats designated for normal use when the vehicle is used on a public road.
A5	Safety-belts and restraint systems	Regulation (EU) 2019/2144	X Application limited to seats designated for normal use when the vehicle is used on a public road.
A6	Safety-belt reminders	Regulation (EU) 2019/2144	X
A7	Partitioning systems	Regulation (EU) 2019/2144	equipment
A8	Child restraint anchorages	Regulation (EU) 2019/2144	IF B
A9	Child restraint systems (IF)	Regulation (EU) 2019/2144	equipment
A10	Enhanced child restraint systems (IF)	Regulation (EU) 2019/2144	equipment
A11	Front underrun protection	Regulation (EU) 2019/2144	A Not required for vehicles meeting the provisions Annex I, Part A, point 4.3(b)(ii) and (iii), as well as point 4.3(c).
A12	Rear underrun protection	Regulation (EU) 2019/2144	A

▼M4

Item	Subject	Regulatory act	N_3
A13	Lateral protection	Regulation (EU) 2019/2144	A
A14	Fuel tank safety (IF)	Regulation (EU) 2019/2144	A
A15	Liquified petroleum gas safety (IF)	Regulation (EU) 2019/2144	X
A16	Compressed and liquified natural gas safety (IF)	Regulation (EU) 2019/2144	X
A17	Hydrogen safety (IF)	Regulation (EU) 2019/2144	X
A18	Hydrogen system material qualification (IF)	Regulation (EU) 2019/2144	X
A19	In-use electric safety (IF)	Regulation (EU) 2019/2144	X
A20	Frontal off-set impact	Regulation (EU) 2019/2144	not in scope
A21	Frontal full-width impact	Regulation (EU) 2019/2144	not in scope
A22	Protective steering	Regulation (EU) 2019/2144	not in scope
A23	Replacement airbag	Regulation (EU) 2019/2144	equipment
A24	Cab impact	Regulation (EU) 2019/2144	A
A25	Side impact	Regulation (EU) 2019/2144	not in scope
A26	Pole side impact	Regulation (EU) 2019/2144	not in scope
A27	Rear impact	Regulation (EU) 2019/2144	not in scope
A28	112-based eCall in-vehicles systems	Regulation (EU) 2015/758	not in scope

▼M4

Item	Subject	Regulatory act	N_3
B	VULNERABLE ROAD USERS, VISION AND VISIBILITY		
B1	Pedestrian leg and head protection	Regulation (EU) 2019/2144	not in scope
B2	Enlarged head impact zone	Regulation (EU) 2019/2144	not in scope
B3	Frontal protection system	Regulation (EU) 2019/2144	equipment
B4	Advanced emergency braking for pedestrians and cyclists ahead	Regulation (EU) 2019/2144	not in scope
B5	Pedestrian and cyclist collision warning	Regulation (EU) 2019/2144	A
B6	Blind spot information system	Regulation (EU) 2019/2144	A
B7	Reversing detection	Regulation (EU) 2019/2144	A
B8	Forward vision	Regulation (EU) 2019/2144	not in scope
B9	Heavy-duty vehicles direct vision	Regulation (EU) 2019/2144	no requirements yet
B10	Safety glazing	Regulation (EU) 2019/2144	X For all glazing other than the windscreen and side windows located forward of the driver's eye points, the material may be either of safety glass or rigid plastic glazing.
B11	Defrost/demist	Regulation (EU) 2019/2144	X Vehicles shall be fitted with an adequate windscreen defrosting and demisting device
B12	Wash/wipe	Regulation (EU) 2019/2144	X Vehicles shall be fitted with adequate windscreen washing and wiping devices
B13	Indirect vision devices	Regulation (EU) 2019/2144	X
B14	Acoustic Vehicle Alerting Systems	Regulation (EU) No 540/2014	X

▼M4

Item	Subject	Regulatory act	N_3
C	VEHICLE CHASSIS, BRAKING, TYRES AND STEERING		
C1	Steering equipment	Regulation (EU) 2019/2144	X Crab steering allowed
C2	Lane departure warning	Regulation (EU) 2019/2144	n/a
C3	Emergency lane keeping	Regulation (EU) 2019/2144	not in scope
C4	Braking	Regulation (EU) 2019/2144	G Test to be performed only with the complete/completed vehicle. Vehicles up to 4 axles shall comply with all the requirements laid down in the relevant regulatory acts. Derogations are admitted for vehicles having more than 4 axles, provided that: (a) they are justified by the particular construction; and (b) all the braking performances, related to parking, service and secondary braking laid down in the relevant regulatory act are fulfilled. Anti-lock braking system is not mandatory for vehicles with hydrostatic drive.
C5	Replacement braking parts	Regulation (EU) 2019/2144	equipment
C6	Brake assist	Regulation (EU) 2019/2144	not in scope
C7	Stability control	Regulation (EU) 2019/2144	n/a
C8	Advanced emergency braking on heavy-duty vehicles	Regulation (EU) 2019/2144	n/a
C9	Advanced emergency braking on light-duty vehicles	Regulation (EU) 2019/2144	not in scope
C10	Tyre safety and environmental performance	Regulation (EU) 2019/2144	X
C11	Spare wheels and run-flat systems (IF)	Regulation (EU) 2019/2144	not in scope
C12	Retreaded tyres	Regulation (EU) 2019/2144	equipment

▼M4

Item	Subject	Regulatory act	N_3
C13	Tyre pressure monitoring for light-duty vehicles	Regulation (EU) 2019/2144	not in scope
C14	Tyre pressure monitoring for heavy-duty vehicles	Regulation (EU) 2019/2144	n/a
C15	Tyre installation	Regulation (EU) 2019/2144	X
C16	Replacement wheels	Regulation (EU) 2019/2144	equipment
D	ON-BOARD INSTRUMENTS, ELECTRICAL SYSTEM, VEHICLE LIGHTING AND PROTECTION AGAINST UNAUTHORISED USE, INCLUDING CYBERATTACKS		
D1	Audible warning	Regulation (EU) 2019/2144	X
D2	Radio interference (electromagnetic compatibility)	Regulation (EU) 2019/2144	X
D3	Protection against unauthorised use, immobiliser and alarm systems	Regulation (EU) 2019/2144	IF G
D4	Protection of vehicle against cyberattacks	Regulation (EU) 2019/2144	X n/a in case of complete vehicle
D5	Speedometer	Regulation (EU) 2019/2144	X
D6	Odometer	Regulation (EU) 2019/2144	X
D7	Speed limitation devices	Regulation (EU) 2019/2144	X
D8	Intelligent speed assistance	Regulation (EU) 2019/2144	A Only to be applied in case of a chassis-cab base vehicle and n/a in all other cases.
D9	Identification of controls, tell-tales and indicators	Regulation (EU) 2019/2144	X
D10	Heating systems	Regulation (EU) 2019/2144	X

▼M4

Item	Subject	Regulatory act	N_3
D11	Light signalling devices	Regulation (EU) 2019/2144	X
D12	Road illumination devices	Regulation (EU) 2019/2144	X
D13	Retro-reflective devices	Regulation (EU) 2019/2144	X
D14	Light sources	Regulation (EU) 2019/2144	X
D15	Installation of light signalling, road illumination and retro-reflective devices	Regulation (EU) 2019/2144	A Provided that all mandatory lighting devices are installed
D16	Emergency stop signal	Regulation (EU) 2019/2144	X Only for vehicles fitted with electronically controlled anti-lock braking system
D17	Headlamp cleaners (IF)	Regulation (EU) 2019/2144	IF
D18	Gear shift indicator	Regulation (EU) 2019/2144	not in scope
E	DRIVER AND SYSTEM BEHAVIOUR		
E1	Alcohol interlock installation facilitation	Regulation (EU) 2019/2144	A Only to be applied in case of a chassis-cab base vehicle and n/a in all other cases.
E2	Driver drowsiness and attention warning	Regulation (EU) 2019/2144	n/a
▼M8 E3	Advanced driver distraction warning	Regulation (EU) 2019/2144	n/a
▼M4 E4	Driver availability monitoring system (in case of automated vehicles)	Regulation (EU) 2019/2144	not in the scope
E5	Event data recorder	Regulation (EU) 2019/2144	no requirement yet

▼M4

Item	Subject	Regulatory act	N_3
E6	Systems to replace driver's control (in case of automated vehicles)	Regulation (EU) 2019/2144	no requirement yet
E7	Systems to provide the vehicle with information on state of vehicle and surrounding area (in case of automated vehicles)	Regulation (EU) 2019/2144	no requirement yet
E8	Platooning (IF)	Regulation (EU) 2019/2144	no requirement yet
E9	Systems to provide safety information to other road users (in case of automated vehicles)	Regulation (EU) 2019/2144	no requirement yet
F	GENERAL VEHICLE CONSTRUCTION AND FEATURES		
F1	Registration plate space	Regulation (EU) 2019/2144	X
F2	Reversing motion	Regulation (EU) 2019/2144	X
F3	Door latches and hinges	Regulation (EU) 2019/2144	not in scope
F4	Door entry steps, handholds and running boards	Regulation (EU) 2019/2144	A
F5	External projections	Regulation (EU) 2019/2144	not in scope
F6	External projections of commercial vehicle cabs	Regulation (EU) 2019/2144	A
F7	Statutory plate and vehicle identification number	Regulation (EU) 2019/2144	X
F8	Towing devices	Regulation (EU) 2019/2144	A

▼M4

Item	Subject	Regulatory act	N_3
F9	Wheel guards	Regulation (EU) 2019/2144	not in scope
F10	Spray suppression systems	Regulation (EU) 2019/2144	A Not required for vehicles meeting the provisions Annex I, Part A, point 4.3(b)(ii) and (iii), as well as point 4.3(c).
F11	Masses and dimensions	Regulation (EU) 2019/2144	A
F12	Mechanical couplings	Regulation (EU) 2019/2144	IF X
F13	Vehicles intended for the transportation of dangerous goods (IF)	Regulation (EU) 2019/2144	n/a
F14	General bus construction	Regulation (EU) 2019/2144	not in scope
F15	Bus strength of superstructure	Regulation (EU) 2019/2144	not in scope
F16	Flammability in buses	Regulation (EU) 2019/2144	not in scope

▼M8

G	ENVIRONMENTAL PERFORMANCE AND EMISSIONS for 'Euro 6' vehicles, for 'Euro VI' vehicles and separate technical units and components (*1)		

▼M4

G1	Sound level	Regulation (EU) No 540/2014	G Test to be performed only with the complete/completed vehicle. The vehicle can be tested in accordance with Directive 70/157/EEC, UN Regulation No 51.02 or Regulation (EC) No 540/2014. The following limit values are applicable, irrespective of the vehicle conditions such as engine type, gearbox type and any sub-classifications: (a) 81 dB(A) for vehicles with an engine power of less than 75 kW; (b) 83 dB(A) for vehicles with an engine power of not less than 75 kW but less than 150 kW; (c) 84 dB(A) for vehicles with an engine power of not less than 150 kW.
G2	Tailpipe emissions of vehicle in lab	Regulation (EC) No 715/2007	not in scope

▼M4

Item	Subject	Regulatory act	N_3
G2a	Determination of specific CO_2 emissions and fuel consumption of vehicle and device for monitoring on board the vehicle the consumption of fuel and/or electric energy	Regulation (EC) No 715/2007	not in scope
G3	Tailpipe emissions of engine in lab	Regulation (EC) No 595/2009	X Alternatively, Regulation (EU) 2016/1628 may apply.
G3a	Determination of specific CO_2 emissions and fuel consumption of vehicle	Regulation (EC) No 595/2009	Not in scope
G3b	Determination of specific energy efficiency performance of trailer	Regulation (EC) No 595/2009	Not in scope
G4	Tailipipe emissions on the road	Regulation Regulation (EC) No 595/2009	X Alternatively, Regulation (EU) 2016/1628 may apply.
G5	Durability of tailpipe emissions	Regulation (EC) No 595/2009	not in scope
G6	Crankcase emissions	Regulation (EC) No 595/2009	X Alternatively, Regulation (EU) 2016/1628 may apply.
G7	Evaporative emissions	Regulation (EC) No 715/2007	not in scope
G8	Low-temperature-tailpipe emissions in lab	Regulation (EC) No 715/2007	not in scope
G9	On-board diagnostics	Regulation (EC) No 595/2009	X Alternatively, Regulation (EU) 2016/1628 may apply.
G10	Absence of defeat device	Regulation (EC) No 595/2009	X Alternatively, Regulation (EU) 2016/1628 may apply.

▼M4

Item	Subject	Regulatory act	N_3
G11	Auxiliary emissions strategies	Regulation (EC) No 595/2009	X Alternatively, Regulation (EU) 2016/1628 may apply.
G12	Anti-tampering	Regulation (EC) No 595/2009	X Alternatively, Regulation (EU) 2016/1628 may apply.
G13	Recyclability	Directive 2005/64/EC	not in scope
G14	Air-conditioning systems	Directive 2006/40/EC	not in scope
▼M8			
G16	Measurement of engine power	Regulation (EC) No 595/2009	X Alternatively, Regulation (EU) 2016/1628 may apply.
G17	Operation of systems using consumable reagent and pollution control systems	Regulation (EC) No 595/2009	X Alternatively, Regulation (EU) 2016/1628 may apply.
GA	ENVIRONMENTAL PERFORMANCE AND EMISSIONS for 'Euro 7' and 'Euro 7ext' vehicles, separate technical units and components (*2)		
GA1	Sound level	Regulation (EU) No 540/2014	G Test to be performed only with the complete/completed vehicle. The vehicle can be tested in accordance with Directive 70/157/EEC, UN Regulation No 51.02 or Regulation (EC) No 540/2014. The following limit values are applicable, irrespective of the vehicle conditions such as engine type, gearbox type and any sub-classifications: (a) 81 dB(A) for vehicles with an engine power of less than 75 kW; (b) 83 dB(A) for vehicles with an engine power of not less than 75 kW but less than 150 kW; (c) 84 dB(A) for vehicles with an engine power of not less than 150 kW.
GA2	Tailpipe emissions of vehicle in lab	Regulation (EU) 2024/1257 Commission Implementing Regulation (EU) 2025/1706	
GA2a	Determination of specific CO_2 emissions and fuel consumption of vehicle and device for monitoring on board the vehicle the consumption of fuel and/or electric energy	Regulation (EU) 2024/1257 Commission Implementing Regulation (EU) 2025/1706	not in scope

▼M8

Item	Subject	Regulatory act	N_3
GA4	Tailpipe emissions on the road	Regulation (EU) 2024/1257 Commission Implementing Regulation (EU) 2025/1706	
GA5	Durability of tailpipe emissions	Regulation (EU) 2024/1257 Commission Implementing Regulation (EU) 2025/1706	not in scope
GA6	Crankcase emissions	Regulation (EU) 2024/1257 Commission Implementing Regulation (EU) 2025/1706	
GA7	Evaporative emissions	Regulation (EU) 2024/1257 Commission Implementing Regulation (EU) 2025/1706	not in scope
GA8	Low-temperature tailpipe emissions in lab	Regulation (EU) 2024/1257 Commission Implementing Regulation (EU) 2025/1706	not in scope
GA9	On-board diagnostics	Regulation (EU) 2024/1257 Commission Implementing Regulation (EU) 2025/1706	
GA10	Absence of manipulation devices and strategies	Regulation (EU) 2024/1257 Commission Implementing Regulation (EU) 2025/1706 Commission Implementing Regulation (EU) 2025/1707	
GA11	Auxiliary emissions strategies	Regulation (EU) 2024/1257 Commission Implementing Regulation (EU) 2025/1706	
GA12	Anti-tampering, security and cybersecurity	Regulation (EU) 2024/1257 Commission Implementing Regulation (EU) 2025/1706	
GA13	Recyclability	Directive 2005/64/EC	not in scope

▼M8

Item	Subject	Regulatory act	N_3
GA14	Air-conditioning systems	Directive 2006/40/EC	not in scope
GA16	Measurement of engine power	Regulation (EU) 2024/1257 Commission Implementing Regulation (EU) 2025/1706	
GA17	Operation of systems using consumable reagent and pollution control systems	Regulation (EU) 2024/1257 Commission Implementing Regulation (EU) 2025/1706	
GA18	On-board monitoring (OBM), in-vehicle display of environmental data and environmental vehicle passport	Regulation (EU) 2024/1257 Commission Implementing Regulation (EU) 2025/1707	

▼M4

H	ACCESS TO VEHICLE INFORMATION AND SOFTWARE UPDATE		
H1	Access to vehicle OBD information and vehicle repair and maintenance information	Regulation (EU) 2018/858, Articles 61 to 66 and Annex X	X
H2	Software update	Regulation (EU) 2018/858, Annex IV UN Regulation No 156	X

(*1) For light-duty vehicles in accordance with Regulation (EC) No 715/2007 (Euro 6 vehicles) or heavy-duty vehicles in accordance with Regulation (EC) No 595/2009 (Euro VI vehicles), compliance with items G2 to G12, G16 and G17 is mandatory, however, only a single vehicle emissions type-approval either under Regulation (EC) No 715/2007 or under Regulation (EC) No 595/2009 is foreseen depending on the scope.

(*2) For vehicles in accordance with Regulation (EU) 2024/1257 (Euro 7 or Euro 7ext vehicles), a collection of type-approvals and/or declarations of compliance is necessary as set out in the implementing legislation refered to in items GA2 to GA18 (excluding items GA13 and GA14). Requirements for Euro 7ext vehicles are those indicated in the column for N1 category vehicles.

▼M4

Appendix 6

Exceptional load transport vehicles

Item	Subject	Regulatory acts	N_3	O_4
A	RESTRAINT SYSTEMS, CRASH TESTING, FUEL SYSTEM INTEGRITY AND HIGH VOLTAGE ELECTRICAL SAFETY			
A1	Interior fittings	Regulation (EU) 2019/2144	not in scope	not in scope
A2	Seats and head restraints	Regulation (EU) 2019/2144	X Application limited to seats designated for normal use when the vehicle is used on a public road. Seats that are not designated as such shall be clearly and permanently identified to users, either by means of a pictogram or a sign with an appropriate text.	not in scope
A3	Bus seats	Regulation (EU) 2019/2144	not in scope	not in scope
A4	Safety-belt anchorages	Regulation (EU) 2019/2144	X Application limited to seats designated for normal use when the vehicle is used on a public road.	not in scope
A5	Safety-belts and restraint systems	Regulation (EU) 2019/2144	X Application limited to seats designated for normal use when the vehicle is used on a public road.	not in scope
A6	Safety-belt reminders	Regulation (EU) 2019/2144	X	not in scope
A7	Partitioning systems	Regulation (EU) 2019/2144	equipment	equipment
A8	Child restraint anchorages	Regulation (EU) 2019/2144	IF B	not in scope
A9	Child restraint systems (IF)	Regulation (EU) 2019/2144	equipment	equipment
A10	Enhanced child restraint systems (IF)	Regulation (EU) 2019/2144	equipment	equipment

▼M4

Item	Subject	Regulatory acts	N_3	O_4
A11	Front underrun protection	Regulation (EU) 2019/2144	A	not in scope
A12	Rear underrun protection	Regulation (EU) 2019/2144	A	A
A13	Lateral protection	Regulation (EU) 2019/2144	X	A
A14	Fuel tank safety (IF)	Regulation (EU) 2019/2144	A	A
A15	Liquified petroleum gas safety (IF)	Regulation (EU) 2019/2144	X	not in scope
A16	Compressed and liquified natural gas safety (IF)	Regulation (EU) 2019/2144	X	not in scope
A17	Hydrogen safety (IF)	Regulation (EU) 2019/2144	X	not in scope
A18	Hydrogen system material qualification (IF)	Regulation (EU) 2019/2144	X	not in scope
A19	In-use electric safety (IF)	Regulation (EU) 2019/2144	X	not in scope
A20	Frontal off-set impact	Regulation (EU) 2019/2144	not in scope	not in scope
A21	Frontal full-width impact	Regulation (EU) 2019/2144	not in scope	not in scope
A22	Protective steering	Regulation (EU) 2019/2144	not in scope	not in scope
A23	Replacement airbag	Regulation (EU) 2019/2144	equipment	equipment
A24	Cab impact	Regulation (EU) 2019/2144	A	not in scope
A25	Side impact	Regulation (EU) 2019/2144	not in scope	not in scope

▼M4

Item	Subject	Regulatory acts	N_3	O_4
A26	Pole side impact	Regulation (EU) 2019/2144	not in scope	not in scope
A27	Rear impact	Regulation (EU) 2019/2144	not in scope	not in scope
A28	112-based eCall in-vehicles systems	Regulation (EU) 2015/758	not in scope	not in scope
B	VULNERABLE ROAD USERS, VISION AND VISIBILITY			
B1	Pedestrian leg and head protection	Regulation (EU) 2019/2144	not in scope	not in scope
B2	Enlarged head impact zone	Regulation (EU) 2019/2144	not in scope	not in scope
B3	Frontal protection system	Regulation (EU) 2019/2144	equipment	equipment
B4	Advanced emergency braking for pedestrians and cyclists ahead	Regulation (EU) 2019/2144	not in scope	not in scope
B5	Pedestrian and cyclist collision warning	Regulation (EU) 2019/2144	X	not in scope
B6	Blind spot information system	Regulation (EU) 2019/2144	X	not in scope
B7	Reversing detection	Regulation (EU) 2019/2144	X	not in scope
B8	Forward vision	Regulation (EU) 2019/2144	not in scope	not in scope
B9	Heavy-duty vehicles direct vision	Regulation (EU) 2019/2144	no requirements yet	not in scope
B10	Safety glazing	Regulation (EU) 2019/2144	X	X Glazing material may be either of safety glass or rigid plastic glazing.

▼M4

Item	Subject	Regulatory acts	N_3	O_4
B11	Defrost/demist	Regulation (EU) 2019/2144	X Vehicles shall be fitted with an adequate windscreen defrosting and demisting device	not in scope
B12	Wash/wipe	Regulation (EU) 2019/2144	X Vehicles shall be fitted with adequate windscreen washing and wiping devices	not in scope
B13	Indirect vision devices	Regulation (EU) 2019/2144	X	not in scope
B14	Acoustic Vehicle Alerting Systems	Regulation (EU) No 540/2014	X	not in scope
C	VEHICLE CHASSIS, BRAKING, TYRES AND STEERING			
C1	Steering equipment	Regulation (EU) 2019/2144	X Crab steering allowed	X
C2	Lane departure warning	Regulation (EU) 2019/2144	n/a	not in scope
C3	Emergency lane keeping	Regulation (EU) 2019/2144	not in scope	not in scope
C4	Braking	Regulation (EU) 2019/2144	G Test to be performed only with the complete/completed vehicle. Vehicles up to 4 axles shall comply with all the requirements laid down in the relevant regulatory acts. Derogations are admitted for vehicles having more than 4 axles, provided that: (a) they are justified by the particular construction; and (b) all the braking performances, related to parking, service and secondary braking laid down in the relevant regulatory act are fulfilled. Anti-lock braking system is not mandatory for vehicles with hydrostatic drive.	X
C5	Replacement braking parts	Regulation (EU) 2019/2144	equipment	equipment

▼M4

Item	Subject	Regulatory acts	N_3	O_4
C6	Brake assist	Regulation (EU) 2019/2144	not in scope	not in scope
C7	Stability control	Regulation (EU) 2019/2144	n/a	X
C8	Advanced emergency braking on heavy-duty vehicles	Regulation (EU) 2019/2144	n/a	not in scope
C9	Advanced emergency braking on light-duty vehicles	Regulation (EU) 2019/2144	not in scope	not in scope
C10	Tyre safety and environmental performance	Regulation (EU) 2019/2144	X	X Tyres are to be type-approved in accordance with the requirements set out in UN Regulation No 117 even if the design speed of the vehicle is less than 80 km/h.
C11	Spare wheels and run-flat systems (IF)	Regulation (EU) 2019/2144	not in scope	not in scope
C12	Retreaded tyres	Regulation (EU) 2019/2144	equipment	equipment
C13	Tyre pressure monitoring for light-duty vehicles	Regulation (EU) 2019/2144	not in scope	not in scope
C14	Tyre pressure monitoring for heavy-duty vehicles	Regulation (EU) 2019/2144	A	A
C15	Tyre installation	Regulation (EU) 2019/2144	X	X Tyres are to be type-approved in accordance with the requirements set out in UN Regulation No 54 even if the design speed of the vehicle is less than 80 km/h. The load capacity may be adjusted in relation to the maximum design speed of the trailer in agreement with the tyre manufacturer.

▼M4

Item	Subject	Regulatory acts	N_3	O_4
C16	Replacement wheels	Regulation (EU) 2019/2144	equipment	equipment
D	ON-BOARD INSTRUMENTS, ELECTRICAL SYSTEM, VEHICLE LIGHTING AND PROTECTION AGAINST UNAUTHORISED USE, INCLUDING CYBERATTACKS			
D1	Audible warning	Regulation (EU) 2019/2144	X	not in scope
D2	Radio interference (electromagnetic compatibility)	Regulation (EU) 2019/2144	X	X
D3	Protection against unauthorised use, immobiliser and alarm systems	Regulation (EU) 2019/2144	IF G	not in scope
D4	Protection of vehicle against cyberattacks	Regulation (EU) 2019/2144	X	not in scope
D5	Speedometer	Regulation (EU) 2019/2144	X	not in scope
D6	Odometer	Regulation (EU) 2019/2144	X	not in scope
D7	Speed limitation devices	Regulation (EU) 2019/2144	X	not in scope
D8	Intelligent speed assistance	Regulation (EU) 2019/2144	X	not in scope
D9	Identification of controls, tell-tales and indicators	Regulation (EU) 2019/2144	X	not in scope
D10	Heating systems	Regulation (EU) 2019/2144	X	X
D11	Light signalling devices	Regulation (EU) 2019/2144	X	X
D12	Road illumination devices	Regulation (EU) 2019/2144	X	X

▼M4

Item	Subject	Regulatory acts	N_3	O_4
D13	Retro-reflective devices	Regulation (EU) 2019/2144	X	X
D14	Light sources	Regulation (EU) 2019/2144	X	X
D15	Installation of light signalling, road illumination and retro-reflective devices	Regulation (EU) 2019/2144	X	A Provided that all mandatory lighting devices are installed and that the geometric visibility is not affected
D16	Emergency stop signal	Regulation (EU) 2019/2144	X Only for vehicles fitted with electronically controlled anti-lock braking system	not in scope
D17	Headlamp cleaners (IF)	Regulation (EU) 2019/2144	IF	not in scope
D18	Gear shift indicator	Regulation (EU) 2019/2144	not in scope	not in scope
E	DRIVER AND SYSTEM BEHAVIOUR			
E1	Alcohol interlock installation facilitation	Regulation (EU) 2019/2144	X	not in scope
E2	Driver drowsiness and attention warning	Regulation (EU) 2019/2144	A	not in scope
▼M8 E3	Advanced driver distraction warning	Regulation (EU) 2019/2144	A Date for refusal to grant EU type-approval: 7 July 2026 Date for the prohibition of the registration of vehicles: 7 July 2028	not in scope
▼M4 E4	Driver availability monitoring system (in case of automated vehicles)	Regulation (EU) 2019/2144	Not in the scope	not in scope
E5	Event data recorder	Regulation (EU) 2019/2144	No requirement yet	not in scope

▼M4

Item	Subject	Regulatory acts	N_3	O_4
E6	Systems to replace driver's control (in case of automated vehicles)	Regulation (EU) 2019/2144	No requirement yet	not in scope
E7	Systems to provide the vehicle with information on state of vehicle and surrounding area (in case of automated vehicles)	Regulation (EU) 2019/2144	No requirement yet	not in scope
E8	Platooning (IF)	Regulation (EU) 2019/2144	No requirement yet	not in scope
E9	Systems to provide safety information to other road users (in case of automated vehicles)	Regulation (EU) 2019/2144	No requirement yet	not in scope
F	GENERAL VEHICLE CONSTRUCTION AND FEATURES			
F1	Registration plate space	Regulation (EU) 2019/2144	X	X
F2	Reversing motion	Regulation (EU) 2019/2144	X	not in scope
F3	Door latches and hinges	Regulation (EU) 2019/2144	not in scope	not in scope
F4	Door entry steps, handholds and running boards	Regulation (EU) 2019/2144	X	not in scope
F5	External projections	Regulation (EU) 2019/2144	not in scope	not in scope
F6	External projections of commercial vehicle cabs	Regulation (EU) 2019/2144	A	not in scope
F7	Statutory plate and vehicle identification number	Regulation (EU) 2019/2144	X	X
F8	Towing devices	Regulation (EU) 2019/2144	A	not in scope

▼M4

Item	Subject	Regulatory acts	N_3	O_4
F9	Wheel guards	Regulation (EU) 2019/2144	not in scope	not in scope
F10	Spray suppression systems	Regulation (EU) 2019/2144	X	A
F11	Masses and dimensions	Regulation (EU) 2019/2144	A	A
F12	Mechanical couplings	Regulation (EU) 2019/2144	IF X	X
F13	Vehicles intended for the transportation of dangerous goods (IF)	Regulation (EU) 2019/2144	X	X
F14	General bus construction	Regulation (EU) 2019/2144	not in scope	not in scope
F15	Bus strength of superstructure	Regulation (EU) 2019/2144	not in scope	not in scope
F16	Flammability in buses	Regulation (EU) 2019/2144	not in scope	not in scope
▼M8				
G	ENVIRONMENTAL PERFORMANCE AND EMISSIONS for ‘Euro 6’ vehicles, for ‘Euro VI’ vehicles and separate technical units and components (*1)			
▼M4				
G1	Sound level	Regulation (EU) No 540/2014	G Test to be performed only with the complete/completed vehicle. The vehicle can be tested in accordance with Directive 70/157/EEC, UN Regulation No 51.02 or Regulation (EC) No 540/2014. The following limit values are applicable, irrespective of the vehicle conditions such as engine type, gearbox type and any sub-classifications: (a) 81 dB(A) for vehicles with an engine power of less than 75 kW; (b) 83 dB(A) for vehicles with an engine power of not less than 75 kW but less than 150 kW; (c) 84 dB(A) for vehicles with an engine power of not less than 150 kW.	not in scope
G2	Tailpipe emissions of vehicle in lab	Regulation (EC) No 715/2007	not in scope	not in scope

▼M4

Item	Subject	Regulatory acts	N_3	O_4
G2a	Determination of specific CO_2 emissions and fuel consumption of vehicle and device for monitoring on board the vehicle the consumption of fuel and/or electric energy	Regulation (EC) No 715/2007	not in scope	not in scope
G3	Tailpipe emissions of engine in lab	Regulation (EC) No 595/2009	X Alternatively, Regulation (EU) 2016/1628 may also apply to vehicles with hydrostatic drive	not in scope
G3a	Determination of specific CO_2 emissions and fuel consumption of vehicle	Regulation (EC) No 595/2009	not in scope	not in scope
G3b	Determination of specific energy efficiency performance of trailer	Regulation (EC) No 595/2009	not in scope	not in scope
G4	Tailipipe emissions on the road	Regulation (EC) No 595/2009	X Alternatively, Regulation (EU) 2016/1628 may also apply to vehicles with hydrostatic drive	not in scope
G5	Durability of tailpipe emissions	Regulation (EC) No 595/2009	X	not in scope
G6	Crankcase emissions	Regulation (EC) No 595/2009	X	not in scope
G7	Evaporative emissions	Regulation (EC) No 715/2007	not in scope	not in scope
G8	Low-temperature tailpipe emissions in lab	Regulation (EC) No 715/2007	not in scope	not in scope
G9	On-board diagnostics	Regulation (EC) No 595/2009	X Alternatively, Regulation (EU) 2016/1628 may also apply to vehicles with hydrostatic drive	not in scope

▼M4

Item	Subject	Regulatory acts	N_3	O_4
G10	Absence of defeat device	Regulation (EC) No 595/2009	X Alternatively, Regulation (EU) 2016/1628 may also apply to vehicles with hydrostatic drive	not in scope
G11	Auxiliary emissions strategies	Regulation (EC) No 595/2009	X Alternatively, Regulation (EU) 2016/1628 may also apply to vehicles with hydrostatic drive	not in scope
G12	Anti-tampering	Regulation (EC) No 595/2009	X Alternatively, Regulation (EU) 2016/1628 may also apply to vehicles with hydrostatic drive	not in scope
G13	Recyclability	Directive 2005/64/EC	not in scope	not in scope
G14	Air-conditioning systems	Directive 2006/40/EC	not in scope	not in scope
▼M8				
G16	Measurement of engine power	Regulation (EC) No 595/2009	X	not in scope
G17	Operation of systems using consumable reagent and pollution control systems	Regulation (EC) No 595/2009	X	not in scope
GA	ENVIRONMENTAL PERFORMANCE AND EMISSIONS for ‘Euro 7’ and ‘Euro 7ext’ vehicles, separate technical units and components (*2)			
GA1	Sound level	Regulation (EU) No 540/2014	G Test to be performed only with the complete/completed vehicle. The vehicle can be tested in accordance with Directive 70/157/EEC, UN Regulation No 51.02 or Regulation (EC) No 540/2014. The following limit values are applicable, irrespective of the vehicle conditions such as engine type, gearbox type and any sub-classifications: (a) 81 dB(A) for vehicles with an engine power of less than 75 kW; (b) 83 dB(A) for vehicles with an engine power of not less than 75 kW but less than 150 kW; (c) 84 dB(A) for vehicles with an engine power of not less than 150 kW.	not in scope
GA2	Tailpipe emissions of vehicle in lab	Regulation (EU) 2024/1257 Commission Implementing Regulation (EU) 2025/1706		not in scope

▼M8

Item	Subject	Regulatory acts	N_3	O_4
GA2a	Determination of specific CO_2 emissions and fuel consumption of vehicle and device for monitoring on board the vehicle the consumption of fuel and/or electric energy	Regulation (EU) 2024/1257 Commission Implementing Regulation (EU) 2025/1706	not in scope	not in scope
GA4	Tailpipe emissions on the road	Regulation (EU) 2024/1257 Commission Implementing Regulation (EU) 2025/1706		not in scope
GA5	Durability of tailpipe emissions	Regulation (EU) 2024/1257 Commission Implementing Regulation (EU) 2025/1706		not in scope
GA6	Crankcase emissions	Regulation (EU) 2024/1257 Commission Implementing Regulation (EU) 2025/1706		not in scope
GA7	Evaporative emissions	Regulation (EU) 2024/1257 Commission Implementing Regulation (EU) 2025/1706	not in scope	not in scope
GA8	Low-temperature tailpipe emissions in lab	Regulation (EU) 2024/1257 Commission Implementing Regulation (EU) 2025/1706	not in scope	not in scope
GA9	On-board diagnostics	Regulation (EU) 2024/1257 Commission Implementing Regulation (EU) 2025/1706		not in scope
GA10	Absence of manipulation devices and strategies	Regulation (EU) 2024/1257 Commission Implementing Regulation (EU) 2025/1706 Commission Implementing Regulation (EU) 2025/1707		not in scope
GA11	Auxiliary emissions strategies	Regulation (EU) 2024/1257 Commission Implementing Regulation (EU) 2025/1706		not in scope

▼M8

Item	Subject	Regulatory acts	N_3	O_4
GA12	Anti-tampering, security and cybersecurity	Regulation (EU) 2024/1257 Commission Implementing Regulation (EU) 2025/1706		not in scope
GA13	Recyclability	Directive 2005/64/EC	not in scope	not in scope
GA14	Air-conditioning systems	Directive 2006/40/EC	not in scope	not in scope
GA16	Measurement of engine power	Regulation (EU) 2024/1257 Commission Implementing Regulation (EU) 2025/1706		not in scope
GA17	Operation of systems using consumable reagent and pollution control systems	Regulation (EU) 2024/1257 Commission Implementing Regulation (EU) 2025/1706		not in scope
GA18	On-board monitoring (OBM), in-vehicle display of environmental data and environmental vehicle passport	Regulation (EU) 2024/1257 Commission Implementing Regulation (EU) 2025/1707		not in scope

▼M4

H	ACCESS TO VEHICLE INFORMATION AND SOFTWARE UPDATE			
H1	Access to vehicle OBD information and vehicle repair and maintenance information	Regulation (EU) 2018/858, Articles 61 to 66 and Annex X	X	X
H2	Software update	Regulation (EU) 2018/858, Annex IV UN Regulation No 156	X	X

(*1) For light-duty vehicles in accordance with Regulation (EC) No 715/2007 (Euro 6 vehicles) or heavy-duty vehicles in accordance with Regulation (EC) No 595/2009 (Euro VI vehicles), compliance with items G2 to G12, G16 and G17 is mandatory, however, only a single vehicle emissions type-approval either under Regulation (EC) No 715/2007 or under Regulation (EC) No 595/2009 is foreseen depending on the scope.

(*2) For vehicles in accordance with Regulation (EU) 2024/1257 (Euro 7 or Euro 7ext vehicles), a collection of type-approvals and/or declarations of compliance is necessary as set out in the implementing legislation refered to in items GA2 to GA18 (excluding items GA13 and GA14). Requirements for Euro 7ext vehicles are those indicated in the column for N1 category vehicles.

▼B

ANNEX III

PROCEDURES TO BE FOLLOWED WITH RESPECT TO EU TYPE-APPROVAL

1. Objectives and scope

1.1. This Annex establishes the procedures for the proper conduct of the vehicle type-approval in accordance with Articles 26, 27 and 28.

1.2. It also includes:

(a) the list of international standards which are of relevance for the designation of the technical services in accordance with Articles 68 and 70;

(b) the description of the procedure to be followed for the assessment of the skills of technical services in accordance with Article 73;

(c) the general requirements for the drafting of test reports by technical services.

2. Type-approval procedure

When receiving an application for vehicle type-approval, the approval authority shall:

(a) verify that all EU type-approval certificates issued pursuant to the regulatory acts as listed in Annex II which are applicable for vehicle type-approval cover the type of vehicle and correspond to the prescribed requirements;

(b) make sure that the vehicle specifications and data are included in the data in the information packages and in the EU type-approval certificates issued in accordance with the relevant regulatory acts;

(c) when an item number is not included in the information package as provided for in any of the regulatory acts, confirm that the relevant part or characteristic conforms to the particulars in the information folder;

(d) on a selected sample of vehicles from the type to be approved carry out or arrange to be carried out inspections of vehicle parts and systems to verify that the vehicle or vehicles are built in accordance with the relevant data contained in the authenticated information package in respect of the relevant EU type-approval certificates;

(e) carry out or arrange to be carried out relevant installation checks in respect of separate technical units, where applicable;

(f) carry out or arrange to be carried out necessary checks in respect of the presence of the devices provided for in explanatory notes 1 and 2 of Part I of Annex II, where applicable;

(g) carry out or arrange to be carried out necessary checks in order to ensure that the requirements set out in explanatory note 5 of Part I of Annex II are fulfilled.

▼B

3. Combination of technical specifications

The number of vehicles to be submitted shall be sufficient to permit the proper check of the various combinations to be type-approved according to the following criteria:

Technical specifications	Vehicle category									
	M_1	M_2	M_3	N_1	N_2	N_3	O_1	O_2	O_3	O_4
Engine	X	X	X	X	X	X	—	—	—	—
Gear box	X	X	X	X	X	X	—	—	—	—
Number of axles	—	X	X	X	X	X	X	X	X	X
Powered axles (number, position and interconnection)	X	X	X	X	X	X	—	—	—	—
Steered axles (number and position)	X	X	X	X	X	X	X	X	X	X
Body styles	X	X	X	X	X	X	X	X	X	X
Number of doors	X	X	X	X	X	X	X	X	X	X
Hand of drive	X	X	X	X	X	X	—	—	—	—
Number of seats	X	X	X	X	X	X	—	—	—	—
Level of equipment	X	X	X	X	X	X	—	—	—	—

4. Specific provisions

Where no approval certificates as provided for in the relevant regulatory acts are available, the approval authority shall:

(a) arrange for the necessary tests and checks as required by each of the relevant regulatory acts;

(b) verify that the vehicle conforms to the particulars in the information folder and that it meets the technical requirements of each of the relevant regulatory acts;

(c) carry out or arrange to be carried out relevant installation checks in respect of separate technical units, where applicable;

(d) carry out or arrange to be carried out necessary checks in respect of the presence of the devices provided for in explanatory notes 1 and 2 of Part I of Annex II where applicable;

(e) carry out or arrange to be carried out necessary checks in order to ensure that the requirements set out in explanatory note 5 of Part I of Annex II are fulfilled.

▼B

Appendix 1

Standards with which the technical services referred to in Article 68 have to comply

1. Activities related to testing for type-approval to be carried out in accordance with the regulatory acts listed in Annex II:

1.1. Category A (tests performed in own facilities):

Standard EN ISO/IEC 17025:2005 on the general requirements for the competence of testing and calibration laboratories.

A technical service designated for category A activities may also carry out the tests provided for in the regulatory acts for which it has been designated, in the facilities of a manufacturer or of a third party. In either case, the personnel responsible for using professional judgement for determination of conformity with the regulatory acts for which the technical service has been designated shall comply with the Standard EN ISO/IEC 17020:2012.

1.2. Category B (supervision of tests, which includes test preparation, where such tests are performed at the manufacturer's facilities or at the facilities of a third party):

Standard EN ISO/IEC 17020:2012 on the general criteria for the operation of various types of bodies performing inspection.

Before performing or supervising any test in the manufacturer's facilities or in the facilities of a third party, the technical service shall verify that the tests facilities and measurement devices comply with the appropriate requirements of Standard EN ISO/IEC 17025:2005.

2. Activities related to conformity of production

2.1. Category C (procedure for the initial assessment and surveillance audits of the manufacturer's quality management system):

Standard EN ISO/IEC 17021:2011 on the requirements for bodies providing audit and certification of management systems.

2.2. Category D (inspection or testing of production samples or supervision thereof):

Standard EN ISO/IEC 17020:2012 on the general criteria for the operation of various types of bodies performing inspection.

▼B

Appendix 2

Procedure for the assessment of the technical services

1. Objective and scope

1.1. This Appendix establishes the conditions in accordance with which the assessment procedure of the technical services shall be conducted by the authority, competent under Article 73 ('competent authority').

1.2. Those requirements shall apply to all technical services, irrespective of their legal status (independent organisation, manufacturer or approval authority acting as technical service).

2. Assessments

The carrying out of an assessment shall be governed by the following:

(a) principle of independence, which is the basis for the impartiality and objectivity of the conclusions; and

(b) an evidence-based approach, which guarantees reliable and reproducible conclusions.

Auditors shall show trust and integrity. They shall respect confidentiality and discretion.

They shall report truthfully and accurately about findings and conclusions.

3. Skills requirements for auditors

3.1. The assessments may only be conducted by auditors having the technical and administrative knowledge necessary for such purposes.

3.2. The auditors shall have been trained specifically for assessment activities. In addition, they shall have the specific knowledge of the technical area in which the technical service will exercise its activities.

3.3. Without prejudice to points 3.1 and 3.2, the assessment referred to in Article 73 shall be conducted by auditors independent of the activities for which the assessment is conducted.

4. Application for designation

4.1. A duly authorised representative of the applicant technical service shall submit a formal application to the competent authority that includes the following information:

(a) general features of the technical service, including corporate entity, name, addresses, legal status and technical resources;

(b) a detailed description, including curriculum vitae, of the personnel in charge of testing and of the managerial staff, setting out their educational qualifications and professional skills;

(c) technical services which use virtual testing methods shall provide evidence of their ability to work in a Computer-Aided-x environment;

(d) general information concerning the technical service, including its activities, its relationship in a larger corporate entity, if any, and addresses of all its physical location(s) to be covered by the scope of designation;

▼B

(e) an agreement to fulfil the requirements for designation and the other obligations of the technical service as provided for in the relevant regulatory acts for which it is designated;

(f) a description of the conformity assessment services that the technical service undertakes in the framework of the relevant regulatory acts and a list of the regulatory acts for which the technical service applies for designation, including limits of capability, where applicable;

(g) a copy of the quality assurance manual of the technical service.

4.2. The competent authority shall review the adequacy of the information provided by the technical service.

4.3. The technical service shall notify to the competent authority any modifications to the information provided in accordance with point 4.1.

5. Resource review

The competent authority shall review its ability to carry out the assessment of the technical service, in terms of its own policy, its competence and the availability of suitable auditors and experts.

6. Subcontracting the assessment

6.1. The competent authority may subcontract parts of the assessment to another competent authority or ask for support from technical experts provided by other competent authorities. The subcontractors and experts have to be accepted by the applicant technical service.

6.2. The competent authority shall take into account accreditation certificates with adequate scope in order to complete its global assessment of the technical service.

7. Preparation for assessment

7.1. The competent authority shall formally appoint a joint assessment team. The competent authority shall ensure that the expertise brought to each joint assessment team is appropriate. In particular, the joint assessment team as a whole shall have both:

(a) appropriate knowledge of the specific scope for which designation is sought; and

(b) sufficient understanding to reliably assess the competence of the technical service to operate within its scope of designation.

7.2. The competent authority shall clearly define the assignment given to the joint assessment team. The task of the joint assessment team is to review the documents collected from the applicant technical service and to conduct the on-site assessment.

7.3. The competent authority shall agree, together with the technical service and the assigned assessment team, to the date and timetable for the assessment. However, it remains the responsibility of the competent authority to pursue a date that is in accordance with the surveillance and reassessment plan.

7.4. The competent authority shall ensure that the joint assessment team is provided with the appropriate criteria documents, previous assessment records, and the relevant documents and records of the technical service.

▼B

8. On-site assessment

The joint assessment team shall conduct the assessment of the technical service at the premises of the technical service from which one or more key activities are performed and, where relevant, shall perform eyewitness assessment at other selected locations where the technical service operates.

9. Analysis of findings and assessment report

9.1. The joint assessment team shall analyse all relevant information and evidence gathered during the document and record review and the on-site assessment. That analysis shall be sufficient to allow the team to determine the extent of competence and conformity of the technical service with the requirements for designation.

9.2. The competent authority's reporting procedures shall ensure that the following requirements are fulfilled.

9.2.1. A meeting shall take place between the joint assessment team and the technical service prior to leaving the site. At that meeting, the joint assessment team shall provide a written and/or oral report on its findings obtained from the analysis. An opportunity shall be provided for the technical service to ask questions about the findings, including non-compliance, if any, and its basis.

9.2.2. A written report on the outcome of the assessment shall be promptly brought to the attention of the technical service. That assessment report shall contain comments on competence and compliance, and shall identify non-compliance, if any, to be resolved in order to conform to all of the requirements for designation.

9.2.3. The technical service shall be invited to respond to the assessment report and to describe the specific actions taken or planned to be taken, within a specific period of time, to resolve any identified non-compliance.

9.3. The competent authority shall ensure that the responses of the technical service are sufficient and effective to resolve non-compliance. If the technical service responses are found to be insufficient, further information shall be requested. Additionally, evidence of effective implementation of actions taken may be requested, or a follow-up assessment may be carried out, to verify effective implementation of corrective actions.

9.4. The assessment report shall include at least the following:

(a) unique identification of the technical service;

(b) date(s) of the on-site assessment;

(c) name(s) of the auditors(s) and/or expert(s) involved in the assessment;

(d) unique identification of all premises assessed;

(e) proposed scope of designation that was assessed;

(f) a statement on the adequacy of the internal organisation and procedures adopted by the technical service supporting its competence, as determined through its fulfilment of the requirements for designation;

(g) information on resolving all non-compliance;

(h) a recommendation of whether the applicant should be designated or confirmed as technical service and, if so, the scope of designation.

▼B

10. Granting, confirming or extending a designation

10.1. The competent authority shall, without undue delay, make the decision on whether to grant, confirm or extend a designation on the basis of the assessment report(s) and any other relevant information.

10.2. The competent authority shall provide a certificate to the technical service. That certificate shall identify the following:

(a) the identity and logo of the competent- authority;

(b) the unique identity of the designated technical service;

(c) the effective date of designation and the expiry date;

(d) a brief indication of or a reference to the scope of designation (relevant regulatory acts or part of them);

(e) a statement of conformity and a reference to this Regulation.

11. Reassessment and surveillance

11.1. Reassessment is similar to an initial assessment except that experience gained during previous assessments shall be taken into account. Surveillance on-site assessments are less comprehensive than reassessments.

11.2. The competent authority shall design its plan for reassessment and surveillance of each designated technical service so that representative samples of the scope of designation are assessed on a regular basis.

The interval between on-site assessments, whether reassessment or surveillance, depends on the proven stability that the technical service has reached.

11.3. Where, during surveillance or reassessments, non-compliance is identified, the competent authority shall define strict time limits for corrective actions to be taken.

11.4. Where the corrective or improvement actions have not been taken within the agreed time limit or are not deemed to be sufficient, the competent authority shall adopt appropriate measures, such as conducting a further assessment, or suspending or withdrawing the designation for one or more of the activities for which the technical service has been designated.

11.5. Where the competent authority decides to suspend or withdraw the designation of a technical service, it shall inform the technical service of its decision by registered mail. In any case, the competent authority shall adopt all the necessary measures to ensure the continuity of the activities already undertaken by the technical service.

12. Records on designated technical services

12.1. The competent authority shall maintain records on technical services to demonstrate that the requirements for designation, including competence, have been effectively fulfilled.

12.2. The competent authority shall keep the records on technical services secure to ensure confidentiality.

12.3. Records on technical services shall include at least the following:

(a) relevant correspondence;

(b) assessment records and reports;

(c) copies of designation certificates.

▼B

ANNEX IV

CONFORMITY OF PRODUCTION PROCEDURES

1. Objectives

1.1. The conformity of production procedure aims to ensure that each vehicle, system, component and technical separate unit, part or equipment produced is in conformity with the approved type.

1.2. The conformity of production procedure shall always include the assessment of quality-assurance management systems, referred to in point 2 as the 'initial assessment', and the verification of the type-approval subject and product-related controls, referred to in point 3 as 'product conformity arrangements'.

2. Initial assessment

2.1. Before granting type-approval, the approval authority shall verify that the manufacturer has established satisfactory arrangements and procedures for ensuring that vehicles, systems, components, separate technical units or parts and equipment are produced in conformity with the approved type.

2.2. Guidance for conducting those assessments may be found in standard EN ISO 19011:2011 — Guidelines for auditing management systems.

2.3. Compliance with the requirements of point 2.1 shall be verified to the satisfaction of the approval authority, as follows:

The approval authority shall be satisfied with the initial assessment and the product conformity arrangements referred to in point 3, taking into account one of the arrangements referred to in points 2.3.1 to 2.3.3, or a combination of those arrangements in full or in part as appropriate.

2.3.1. The initial assessment and verification of product conformity arrangements shall be carried out by the approval authority or a body designated for that purpose by the approval authority.

2.3.1.1. When considering the extent of the initial assessment to be carried out, the approval authority may take into account the following information:

(a) whether the manufacturer has a certification similar to the one referred to in point 2.3.3, but which has not been qualified or recognised under that point;

(b) in the case of a type-approval of a system, component or separate technical unit, quality system assessments that have been performed by vehicle manufacturer(s) in the premises of the manufacturer of the system, component or separate technical unit, in accordance with one or more of the industry sector specifications satisfying the requirements in the standard EN ISO 9001:2015 or ISO/TS16949:2009;

▼B

(c) whether in one of the Member States one or more of the manufacturer's type-approvals recently have been withdrawn, due to unsatisfactory control of conformity of production. In that case, the initial assessment by the approval authority shall not be limited to accepting the manufacturer's quality system certification, but shall include a verification whether all necessary improvements for ensuring effective control have been implemented, so that vehicles, components, systems or separate technical units are produced in conformity with the approved type.

2.3.2. The initial assessment and verification of product conformity arrangements may be carried out by the approval authority of another Member State or by the body designated for that purpose by the approval authority.

2.3.2.1. The approval authority of that other Member State shall in that case prepare a statement of compliance, which outlines the areas and production facilities that that approval authority has covered as relevant to the product(s) to be type-approved and to the regulatory acts in accordance with which these products are to be type-approved.

2.3.2.2. Upon receiving a request for a statement of compliance from the approval authority of a Member State granting type-approval, the approval authority of another Member State shall immediately send that statement of compliance or inform that approval authority that is unable to provide such a statement.

2.3.2.3. The statement of compliance shall include at least the following:

(a) Group or company	(e.g. XYZ Automotive)
(b) Particular organisation	(e.g. regional Division)
(c) Plants/Sites	(e.g. Engine Plant 1 (in country A) — Vehicle Plant 2 (in country B))
(d) Vehicle/Component range	(e.g. All Category M_1 models)
(e) Areas assessed	(e.g. Engine assembly, body pressing and assembly, vehicle assembly)
(f) Documents examined	(e.g. Company and site quality manual and procedures)
(g) Date of the assessment	(e.g. Audit conducted from dd/mm/yyyy to dd/mm/yyyy)
(h) Planned monitoring visit	(e.g. mm/yyyy)

2.3.3. An approval authority may also accept the manufacturer's certification to standards EN ISO 9001:2015 or ISO/TS16949:2009 (the scope of that certification shall in that case cover the product(s) to be approved), or an equivalent certification standard as satisfying the initial assessment requirements of point 2.3., provided that conformity of production is indeed covered by the quality management system and that the manufacturer's type-approval has not been withdrawn as referred to in point 2.3.1.1.(c). The manufacturer shall provide details of the certification and inform the approval authority of any revisions to its validity or scope.

▼B

2.4. For the purpose of vehicle type-approval, the initial assessments carried out for the granting of type-approvals for systems, components and separate technical units of the vehicle need not be repeated, but shall be completed by an assessment of the locations and activities relating to the assembly of the whole vehicle that have not been covered by the initial assessments.

3. Product conformity arrangements

3.1. Every vehicle, system, component or separate technical unit, part or item of equipment approved pursuant to a UN Regulation annexed to the Revised 1958 Agreement and to this Regulation shall be so manufactured as to conform to the type approved by meeting the requirements of this Annex, the said UN Regulation and this Regulation.

3.2. Before granting a type-approval pursuant to this Regulation and to a UN Regulation annexed to the Revised 1958 Agreement, the approval authority shall verify the existence of adequate product conformity arrangements and documented control plans, to be agreed with the manufacturer for each approval, to carry out at specified intervals the tests or associated checks that are necessary to verify continued conformity with the approved type, including, where applicable, tests specified in this Regulation and the said UN Regulation.

3.3. The holder of the type-approval shall, in particular:

3.3.1. ensure the existence and application of procedures for effective control of the conformity of vehicles, systems, components, separate technical units, parts or equipment to the approved type;

3.3.2. have access to the testing or other appropriate equipment necessary for checking the conformity to each approved type;

3.3.3. ensure that the data resulting from tests or checks are recorded and that annexed documents remain available for a period of up to 10 years to be determined in agreement with the approval authority;

3.3.4. analyse the results of each type of test or check, in order to verify and ensure the stability of the product characteristics, making allowance for variation of an industrial production;

3.3.5. ensure that for each type of product, at least the checks prescribed in this Regulation and the tests prescribed in the relevant regulatory acts listed in Annex II are carried out;

3.3.6. ensure that any set of samples or test pieces that gives evidence of non-conformity in the type of test in question, gives rise to a further sampling and testing. All the necessary steps shall be taken to restore the production process to ensure conformity with the approved type.

3.4. In the case of step-by-step, mixed or multi-stage type-approvals, the approval authority that is granting a whole-vehicle type-approval may request from any approval authority that has granted type-approval of any relevant system, component or separate technical unit specific details regarding compliance with the conformity of production requirements set out in this Annex.

▼B

3.5. The approval authority that is granting a whole-vehicle type-approval and is not satisfied with the reported information referred to in point 3.4., and that has communicated this in writing to the relevant manufacturer and to the approval authority granting the type-approval for the system, component or separate technical unit, shall request the performance of additional conformity of production audits or checks, which shall be performed at the site of the manufacturer(s) of those systems, components or separate technical units. The results of this additional conformity of production audits or checks shall immediately be made available to that approval authority.

3.6. Where points 3.4. and 3.5. apply and the approval authority granting the whole-vehicle type-approval has not been satisfied with the additional audit or check results, the manufacturer shall ensure that conformity of production is restored as soon as possible to the satisfaction of that approval authority and of the approval authority granting type-approval of the system, component or separate technical unit.

4. Continued verification arrangements

4.1. The approval authority that has granted type-approval may at any time verify the conformity control methods applied in each production facility by means of periodic audits. The manufacturer shall for that purpose allow access to that authority to the manufacturing, inspection, testing, storage and distribution sites and shall provide all necessary information with regard to the quality management system documentation and records.

4.1.1. The normal arrangements for such periodic audits shall be to monitor the continued effectiveness of the procedures laid down in points 2 and 3 (initial assessment and product conformity arrangements).

4.1.1.1. Surveillance activities carried out by the technical services (qualified or recognised as required in point 2.3.3) shall be accepted as satisfying the requirement of point 4.1.1 with regard to the procedures established at initial assessment.

4.1.1.2. The normal frequency of verifications by the approval authority (other than those referred to in point 4.1.1.1) shall be such as to ensure that the relevant controls applied in accordance with points 2 and 3 are reviewed at intervals based on a risk assessment methodology that complies with the international standard ISO 31000:2018 – Risk Management – Principles and Guidelines, and such verification shall in any case be conducted at least once every three years. This methodology shall in particular take into account any non-conformity raised by other Member States in the context of Article 54(1).

4.2. At every review, records of tests or checks and records of production, in particular records of those tests or checks documented as required in point 2.2, shall be made available to the inspector.

4.3. The inspector may select samples at random manner to be tested in the manufacturer's laboratory or in the facilities of the technical service. In such a case only physical test shall be carried out. The minimum number of samples may be determined on the basis of the results of the manufacturer's own verification.

▼B

4.4. The inspector who is of the opinion that the level of control is unsatisfactory, or who deems it necessary to verify the validity of the tests carried out in accordance with point 4.2, shall select samples to be sent to a technical service to perform physical tests in accordance with the requirements on conformity of production, set out in the regulatory acts listed in Annex II.

4.5. Where unsatisfactory results are found during an inspection or a monitoring review, the approval authority shall take all necessary steps to ensure that the manufacturer restores the conformity of production as rapidly as possible.

4.6. In cases where compliance with UN Regulations is required by this Regulation, the manufacturer may choose to apply this Annex as an equivalent alternative to the conformity of production requirements in the respective UN Regulations. However, if points 4.4. or 4.5. apply, all separate conformity of production requirements in the UN Regulations have to be complied with to the satisfaction of the approval authority until it decides that conformity of production has been restored.

▼M4

5. Arrangements concerning software update

The software update management system of the manufacturer as well as the whole vehicle type shall comply with the requirements as set out in UN Regulation 156.

▼B

ANNEX V

SMALL SERIES AND END-OF-SERIES LIMITS

A. SMALL SERIES QUANTITIVE ANNUAL LIMITS

1. The number of units of one type of vehicle to be registered, made available on the market or entered into service annually in the Union shall not exceed, pursuant to Article 41, the quantitive annual limits shown in the following table for the vehicle category in question:

▼M4

Category	Units
M_1	1 500
M_2, M_3	0 until the date of application of the delegated acts referred to in Article 41(5). For fully automated vehicles produced in small series: 1 500 from 6 December 2022
N_1	1 500
N_2, N_3	0 until the date of application of the delegated acts referred to in Article 41(5). For fully automated vehicles produced in small series: 1 500 from 6 December 2022
O_1, O_2	0
O_3, O_4	0

▼B

2. The number of units of one type of vehicle to be registered, made available on the market or entered into service annually in a Member State, shall be determined by that Member State but shall not exceed, pursuant to Article 42, the quantitative annual limits shown in the following table for the vehicle category in question:

Category	Units
M_1	250
M_2, M_3	250
N_1	250
N_2, N_3	250
O_1, O_2	500
O_3, O_4	250

B. END-OF-SERIES LIMITS

The maximum number of complete and completed vehicles entered into service in each Member State under the procedure ‘End-of-Series’ shall be restricted in one of the following ways to be chosen by the Member State:

1. The maximum number of vehicles of one or more types may, in the case of category M_1, not exceed 10 % and in the case of all other categories not exceed 30 % of the vehicles of all types concerned entered into service in that Member State during the previous year. Should 10 %, respectively 30 %, be less than 100 vehicles, then the Member State may allow the entry into service of a maximum of 100 vehicles.

▼B

2. Vehicles of any one type shall be restricted to those for which a valid certificate of conformity was issued on or after the date of manufacture of the vehicle and which remained valid for at least three months after its date of issue but subsequently lost its validity due to the entry into force of a regulatory act.

▼B

ANNEX VI

LIST OF PARTS OR EQUIPMENT THAT MAY POSE A SERIOUS RISK TO THE CORRECT FUNCTIONING OF SYSTEMS THAT ARE ESSENTIAL FOR THE SAFETY OF THE VEHICLE OR ITS ENVIRONMENTAL PERFORMANCE, THE PERFORMANCE REQUIREMENTS OF SUCH PARTS AND EQUIPMENT, THE APPROPRIATE TEST PROCEDURES, AND MARKING AND PACKAGING PROVISIONS

I. Parts or equipment having a significant impact on vehicle safety

Item No	Item description	Performance requirement	Test procedure	Marking requirement	Packaging requirements
1	[…]				
2					
3					

II. Parts or equipment having a significant impact on the environmental performance of the vehicle

Item No	Item description	Performance requirement	Test procedure	Marking requirement	Packaging requirements
1	[…]				
2					
3					

▼B

ANNEX VII

REGULATORY ACTS FOR WHICH A MANUFACTURER MAY BE DESIGNATED AS A TECHNICAL SERVICE

1. Objectives and scope

1.1. This Annex lays down the list of the regulatory acts for which an in-house technical service of a manufacturer may be designated as a technical service in accordance with Article 72(1).

1.2. It also includes appropriate provisions concerning the designation of an in-house technical service of a manufacturer as technical service, to be applied in the framework of the type-approval of vehicles, components and separate technical units concerned by Part I of Annex II.

1.3. This Annex however does not apply to manufacturers who apply for the EU type-approval of vehicles produced in small series, as referred to in Article 41.

2. Designation of an in-house technical service of a manufacturer as a technical service

2.1. An in-house technical service of a manufacturer designated as a technical service is a manufacturer which has been designated by the type-approval authority as a testing laboratory to carry out on its behalf the approval tests.

The expression ‘to carry out tests’ is not restricted to the measurement of performances, but also covers the registration of test results and the submission to the type-approval authority of a report, including the relevant conclusions.

It also covers the checking of compliance with those provisions that do not necessarily require measurement. This is the case for the assessment whether the design complies with the legislative requirements.

3. List of regulatory acts and restrictions

	Subject	Regulatory act reference
4A	Space for mounting and fixing rear registration plates	Regulation (EC) No 661/2009 Regulation (EU) No 1003/2010
7A	Audible warning devices and signals	Regulation (EC) No 661/2009 UN Regulation No 28
10A	Electromagnetic compatibility	Regulation (EC) No 661/2009 UN Regulation No 10
18A	Manufacturer's statutory plate and VIN	Regulation (EC) No 661/2009 Regulation (EU) No 19/2011
20A	Installation of lighting and light-signalling devices on vehicles	Regulation (EC) No 661/2009 UN Regulation No 48
27A	Towing device	Regulation (EC) No 661/2009 Regulation (EU) No 1005/2010
33A	Location and identification of hand controls, tell-tales and indicators	Regulation (EC) No 661/2009 UN Regulation No 121

▼B

	Subject	Regulatory act reference
34A	Windscreen defrosting and demisting systems	Regulation (EC) No 661/2009 Regulation (EU) No 672/2010
35A	Windscreen wiper and washer systems	Regulation (EC) No 661/2009 Regulation (EU) No 1008/2010
36A	Heating systems	Regulation (EC) No 661/2009 UN Regulation No 122 Except the provisions in Annex 8 relating to LPG combustion heaters and LPG heating systems
37A	Wheel guards	Regulation (EC) No 661/2009 Regulation (EU) No 1009/2010
44A	Masses and dimensions	Regulation (EC) No 661/2009 Regulation (EU) No 1230/2012
45A	Safety glazing materials and their installation on vehicles	Regulation (EC) No 661/2009 UN Regulation No 43 Restricted to the provisions included in Annex 21
46A	Installation of tyres	Regulation (EC) No 661/2009 Regulation (EU) No 458/2011
▼M3 46B	Rolling resistance determination	Regulation (EU) 2017/2400, Annex X
▼B 48A	Masses and dimensions	Regulation (EC) No 661/2009 Regulation (EU) No 1230/2012
49A	Commercial vehicles with regard to their external projections forward of the cab's rear panel	Regulation (EC) No 661/2009 UN Regulation No 61
50A	Mechanical coupling components of combinations of vehicles	Regulation (EC) No 661/2009 UN Regulation No 55 Restricted to the provisions included in Annex 5 (up to and including paragraph 8) and Annex 7
61	Air-conditioning system	Directive 2006/40/EC

▼B

Appendix

Designation of an in-house technical service of a manufacturer as technical service and subcontracting

1. General

1.1. The designation and notification of an in-house technical service of a manufacturer as a technical service shall be made in accordance with Articles 68 to 81 and any subcontracting shall be done in accordance with this Appendix.

2. Subcontracting

2.1. In accordance with Article 71(1), a technical service may nominate a subcontractor for performing tests on his behalf.

2.2. For the purposes of this Appendix 'Subcontractor' means either a subsidiary of the technical service that has been entrusted by that technical service with testing activities inside its own organisation or a third party under contract with that technical service to perform test activities.

2.3. The use of the services of a subcontractor does not release the technical service from its obligation to comply with Articles 69, 70, 80 and 81, and in particular with those concerning the skills of the technical services and compliance with Standard EN ISO/IEC 17025:2005.

2.4. Point 2 of Annex VII shall apply to the subcontractor.

3. Test report

Test reports shall be drafted in accordance with the implementing acts referred to in Article 30(3).

▼B

ANNEX VIII

CONDITIONS FOR THE USE OF VIRTUAL TESTING METHODS BY A MANUFACTURER OR A TECHNICAL SERVICE

1. Objectives and scope

This Annex lays down provisions concerning virtual testing in accordance with Article 30(7).

2. List of regulatory acts

	Subject	Regulatory act reference
3B	Rear underrun protective devices (RUPDs) and their installation; rear underrun protection (RUP)	Regulation (EC) No 661/2009 UN Regulation No 58
6A	Vehicle access and manoeuvrability (steps, running boards and handholds)	Regulation (EC) No 661/2009 Regulation (EU) No 130/2012
6B	Door latches and door retention components	Regulation (EC) No 661/2009 UN Regulation No 11
8A	Devices for indirect vision and their installation	Regulation (EC) No 661/2009 UN Regulation No 46
12A	Interior fittings	Regulation (EC) No 661/2009 UN Regulation No 21
16A	External projections	Regulation (EC) No 661/2009 UN Regulation No 26
20A	Installation of lighting and light-signalling devices on vehicles	Regulation (EC) No 661/2009 UN Regulation No 48
27A	Towing device	Regulation (EC) No 661/2009 Regulation (EU) No 1005/2010
32A	Forward field of vision	Regulation (EC) No 661/2009 UN Regulation No 125
35A	Windscreen wiper and washer systems	Regulation (EC) No 661/2009 Regulation (EU) No 1008/2010
37A	Wheel guards	Regulation (EC) No 661/2009 Regulation (EU) No 1009/2010
42A	Lateral protection of goods vehicles	Regulation (EC) No 661/2009 UN Regulation No 73
48A	Masses and dimensions	Regulation (EC) No 661/2009 Regulation (EU) No 1230/2012
49A	Commercial vehicles with regard to their external projections forward of the cab's rear panel	Regulation (EC) No 661/2009 UN Regulation No 61
50A	Mechanical coupling components of combinations of vehicles	Regulation (EC) No 661/2009 UN Regulation No 55

▼B

	Subject	Regulatory act reference
50B	Close-coupling device (CCD); fitting of an approved type of CCD	Regulation (EC) No 661/2009 UN Regulation No 102
52A	M_2 and M_3 vehicles	Regulation (EC) No 661/2009 UN Regulation No 107
52B	Strength of the superstructure of large passenger vehicles	Regulation (EC) No 661/2009 UN Regulation No 66
57A	Front underrun protective devices (FUPDs) and their installation; front underrun protection (FUP)	Regulation (EC) No 661/2009 UN Regulation No 93

▼B

Appendix 1

General conditions for the use of virtual testing methods

1. Virtual test pattern

The following scheme shall be used as basis structure for describing and conducting virtual testing:

(a) purpose;

(b) structure model;

(c) boundary conditions;

(d) load assumptions;

(e) calculation;

(f) assessment;

(g) documentation.

2. Fundamentals of computer simulation and calculation

2.1. Mathematical model

The mathematical model shall be supplied by the manufacturer. It shall reflect the complexity of the structure of the vehicle, system, component or separate technical unit to be tested in relation to the requirements of the relevant regulatory act and its boundary conditions.

The same provisions shall apply for testing components or separate technical units independently from the vehicle.

2.2. Validation process of the mathematical model

The mathematical model shall be validated against the actual test conditions.

To that effect a physical test shall be conducted to compare the results obtained when using the mathematical model with the results of a physical test. Comparability of the test results shall be proven. The manufacturer or the technical service shall draft a validation report and submit it to the approval authority.

Any change to the mathematical model or to the software that is likely to invalidate the validation report shall be brought to the attention of the approval authority, which may require that a new validation process is conducted.

The flow chart of the validation process is shown in Appendix 3.

2.3. Documentation

The manufacturer shall make available to the technical service and document the data and auxiliary tools used for simulation and calculation.

3. Tools and support

The manufacturer shall supply the technical service at its request with the necessary tools to conduct the virtual testing, including appropriate software, or provide that technical service access to these tools.

The manufacturer shall also provide appropriate support to the technical service.

The access and support provided by the manufacturer to a technical service does not exempt the technical service from its obligations regarding the skills of its personnel, the payment of licence rights and confidentiality.

▼B

Appendix 2

Specific conditions for the use of virtual testing methods

1. List of regulatory acts

	Regulatory act reference	Annex and paragraphs	Specific conditions
3B	Regulation (EC) No 661/2009 UN Regulation No 58	Paragraphs 2.3, 7.3. and 25.6 of UN Regulation No 58.	Dimensions and resistance to forces.
6A	Regulation (EC) No 661/2009 Regulation (EU) No 130/2012	Annex II, Part 1 and 2 of Regulation (EU) No 130/2012.	Dimensions of steps, running boards and handholds.
6B	Regulation (EC) No 661/2009 UN Regulation No 11	Annex 3 of UN Regulation No 11. Annex 4, paragraph 2.1. of UN Regulation No 11. Annex 5 of UN Regulation No 11.	Tensile strength tests and resistance of latches to acceleration.
8A	Regulation (EC) No 661/2009 UN Regulation No 46	Paragraph 15.2.4. of UN Regulation No 46.	Prescribed fields of vision of rear-view mirrors.
12A	Regulation (EC) No 661/2009 UN Regulation No 21	(a) Paragraphs 5. to 5.7. of UN Regulation No 21. (b) Paragraph 2.3. of UN Regulation No 21.	(a) Measurement of all radii of curvature and of all projections except for those requirements where a force has to be applied in order to check compliance with the provisions. (b) Determination of the head-impact zone.
16A	Regulation (EC) No 661/2009 UN Regulation No 26	Paragraph 5.2.4. of UN Regulation No 26 All provisions in paragraphs 5 (General requirements) and 6 (Particular requirements) of UN Regulation No 26.	Measurement of all radii of curvature and of all projections except for those requirements where a force has to be applied in order to check compliance with the provisions.
20A	Regulation (EC) No 661/2009 UN Regulation No 48	Paragraph 6. (Individual specifications), and Annexes 4, 5 and 6 to UN Regulation No 48.	The test drive provided for in paragraph 6.22.9.2.2 shall be performed on a real vehicle.
27A	Regulation (EC) No 661/2009 Regulation (EU) No 1005/2010	Annex II, point 1.2. of Regulation (EU) No 1005/2010.	Tractive and compressive static force.
32A	Regulation (EC) No 661/2009 UN Regulation No 125	Paragraph 5 (Specifications) of UN Regulation No 125.	Obstructions and field of vision.

▼B

	Regulatory act reference	Annex and paragraphs	Specific conditions
35A	Regulation (EC) No 661/2009 Regulation (EU) No 1008/2010	Annex III, points 1.1.2. and 1.1.3. of Regulation (EU) No 1008/2010.	Determination of the swept area only.
37A	Regulation (EC) No 661/2009 Regulation (EU) No 1009/2010	Annex II, point 2. of Regulation (EU) No 1009/2010.	Verification of the dimensional requirements.
42A	Regulation (EC) No 661/2009 UN Regulation No 73	Paragraph 12.10 of UN Regulation No 73.	Resistance under a horizontal force and deflection measurement.
48A	Regulation (EC) No 661/2009 Regulation (EU) No 1230/2012	(a) Annex I, Part B, points 7 and 8 of Regulation (EU) No 1230/2012. (b) Annex I, Part C, points 6 and 7 of Regulation (EU) No 1230/2012.	(a) Check of compliance with the manoeuvrability requirements including manoeuvrability of vehicles fitted with lift- or loadable axles. (b) Measurement of the maximum rear swing-out.
49A	Regulation (EC) No 661/2009 UN Regulation No 61	Paragraphs 5 and 6 of UN Regulation No 61.	Measurement of all radii of curvature and of all projections except for those requirements where a force has to be applied in order to check compliance with the provisions.
50A	Regulation (EC) No 661/2009 UN Regulation No 55	(a) Annex 5 'Requirements for mechanical coupling devices' of UN Regulation No 55. (b) Annex 6, paragraph 1.1. of UN Regulation No 55. (c) Annex 6, paragraph 3 of UN Regulation No 55.	(a) All provisions of paragraphs 1 to 8 included. (b) Strength tests on mechanicals couplings of simple design may be replaced by virtual tests. (c) Paragraphs 3.6.1. (Strength test), 3.6.2. (Resistance to buckling) and 3.6.3. (Resistance to bending moment) only.
52A	Regulation (EC) No 661/2009 UN Regulation No 107	Annex 3 of UN Regulation No 107.	Paragraph 7.4.5. (calculation method).
52B	Regulation (EC) No 661/2009 UN Regulation No 66	Annex 9 of UN Regulation No 66.	Computer simulation of rollover test on complete vehicle as an equivalent approval method.
57A	Regulation (EC) No 661/2009 UN Regulation No 93	Annex 5, paragraph 3 of UN Regulation No 93.	Resistance under a horizontal force and deflection measurement.

▼B

Appendix 3

Validation process

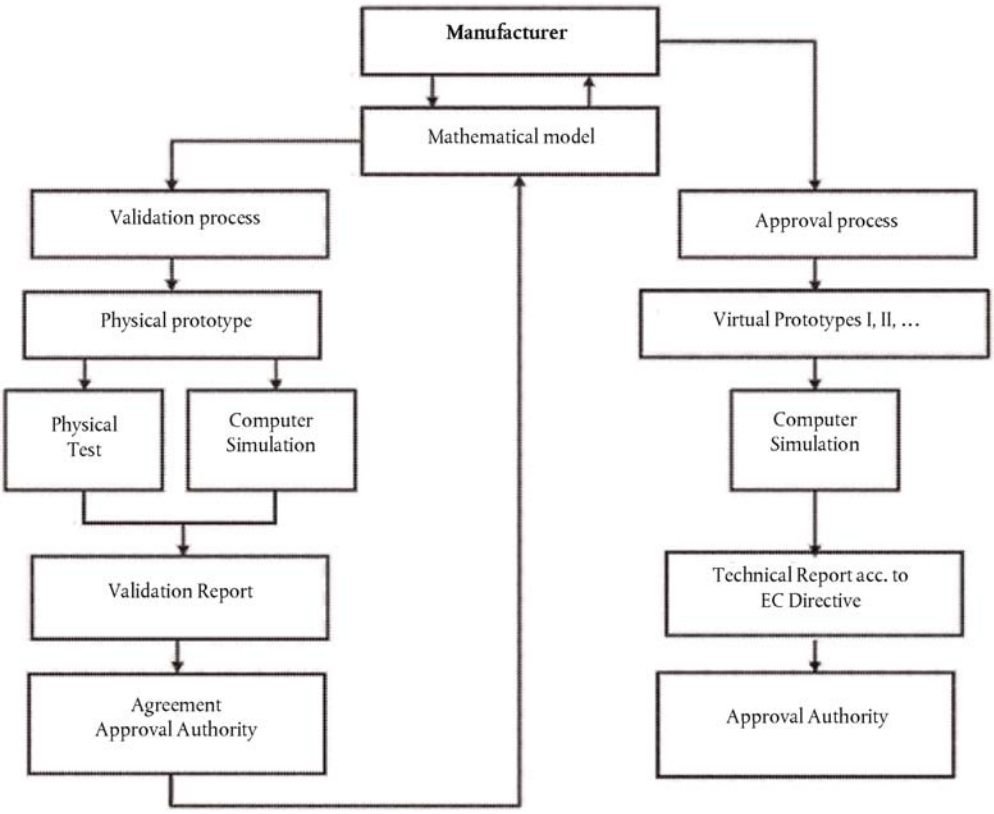

▼B

ANNEX IX

PROCEDURES TO BE FOLLOWED DURING MULTI-STAGE TYPE-APPROVAL

1. Obligations of manufacturers

1.1. The satisfactory operation of the multi-stage type-approval requires joint action by all the manufacturers concerned. To that end approval authorities must ensure, before granting first and subsequent stage type-approvals, that suitable arrangements exist between the relevant manufacturers for the supply and interchange of documents and information, so that the completed type of vehicle meets the technical requirements of all the relevant regulatory acts listed in Annex II. Such information must include details of relevant system, component and separate technical unit type-approvals and of vehicle parts that form part of the incomplete vehicle but have not yet been type-approved.

1.2. Each manufacturer involved in a multi-stage type-approval shall be responsible for the approval and conformity of production of all systems, components or separate technical units manufactured or added by that manufacturer to the previously built stage. The manufacturer of the subsequent stage shall not be responsible for objects that have been approved in an earlier stage, except where that manufacturer modifies relevant parts to such an extent that the previously granted type-approval becomes invalid.

2. Obligations of approval authorities

2.1. The approval authority shall:

(a) verify that all EU type-approval certificates issued pursuant to the regulatory acts that are applicable for vehicle type-approval cover the type of vehicle at its state of completion and correspond to the prescribed requirements;

(b) ensure that all the relevant data, taking account of the state of completion of the vehicle, is included in the information folder;

(c) by reference to the documentation ensure that the vehicle specification(s) and data contained in the information folder are included in the data in the information packages and in the EU type-approval certificates issued in accordance with the relevant regulatory acts; and in the case of a completed vehicle, where an item number of the information folder is not included in the information package of any of the regulatory acts, confirm that the relevant part or characteristic conforms to the particulars in the information folder;

(d) on a selected sample of vehicles from the type to be approved carry out or arrange to be carried out inspections of vehicle parts and systems to verify that the vehicle(s) is/are built in accordance with the relevant data contained in the authenticated information package in accordance with all relevant regulatory acts; and

(e) where required carry out, or arrange to be carried out, relevant installation checks for separate technical units.

▼B

2.2. The number of vehicles to be inspected for the purposes of point 2.1 (d) shall be sufficient to permit the proper control of the various combinations to be EU type-approved according to the state of completion of the vehicle and the following criteria:

— engine;

— gearbox;

— powered axles (number, position, interconnection);

— steered axles (number and position);

— body styles;

— number of doors;

— hand of drive;

— number of seats;

— level of equipment.

3. Applicable requirements

3.1. Multi-stage type-approvals shall be granted on the basis of the state of completion of the type of vehicle and shall incorporate all type-approvals granted at earlier stages.

3.2. For the whole-vehicle type-approval, this Regulation (in particular the requirements of Annex I and the particular regulatory acts listed in Annex II) shall apply in the same manner as if the approval would have been granted (or extended) to the manufacturer of the base vehicle.

3.2.1. Where a type of system, component or separate technical unit has not been modified, the system, component or separate technical unit type-approval granted in the previous stage shall remain valid until the expiration date for the first registration, as specified in the particular regulatory act.

3.2.2. Where a type of system has been modified at the subsequent stage of completion of the vehicle, to the extent that the system has to be retested for type-approval purposes, that retesting shall be limited to only those parts of the system that have been modified or affected by the changes.

3.2.3. Where a type of vehicle or a type of system has been modified by another manufacturer at the subsequent stage of completion of the vehicle, to the extent that, apart from the manufacturers name, the vehicle or system may still be considered as the same type, the requirement applying to existing types may still be applied as long as the date for first registration in the relevant regulatory act has not been reached.

3.2.4. The change of category of a vehicle shall lead to the application of the relevant requirements to the new category of vehicle. The EU type-approval certificates from the previous category shall be accepted provided that the vehicle complies with the same requirements as, or more stringent than, those applying to the new category.

3.3. Subject to the agreement of the approval authority, a whole-vehicle type-approval granted to the manufacturer of the subsequent stage of completion of the vehicle does not need to be extended or revised where an extension given at the previous stage vehicle does not affect the subsequent stage or the technical data of the vehicle. However, the type-approval number including the extension of the previous stage(s) vehicle shall be copied in the certificate of conformity of the subsequent stage vehicle.

▼B

3.4. Where the cargo area of a complete or completed vehicle of category N or O is modified by another manufacturer for the addition of removable fittings to store and secure the cargo (for example, load space lining, storage racks and roof racks), such items can be treated as part of the pay-mass and a type-approval is not needed, provided both of the following conditions are met:

(a) the modifications do not affect the vehicle's type-approval in any way, other than an increase of the actual mass of the vehicle;

(b) the added fittings can be removed without using special tools.

4. Identification of the vehicle

4.1. The VIN, prescribed by Regulation (EU) No 19/2011, shall be retained during all the subsequent stages of the type-approval to ensure the traceability of the process.

4.2. At the second and subsequent stages, in addition to the statutory plate prescribed by Regulation (EU) No 19/2011, each manufacturer shall affix to the vehicle an additional plate the model of which is shown in the Appendix to this Annex. This plate shall be firmly attached, in a conspicuous and readily accessible position on a part not subject to replacement in use. It shall clearly and indelibly show the following information in the order listed:

— the name of the manufacturer;

— sections 1, 3 and 4 of the EU type-approval number;

— the stage of approval;

— the VIN of the base vehicle;

— the technically permissible maximum laden mass of the vehicle where the value has changed during the current stage of approval;

— the technically permissible maximum laden mass of the combination (where the value has changed during the current stage of approval and where the vehicle is permitted to tow a trailer). ‘0’ shall be used if the vehicle is not permitted to tow a trailer;

— the technically permissible maximum mass on each axle, listed in order from front to rear where the value has changed during the current stage of approval;

— in the case of a semi-trailer or centre axle trailer, the technically permissible maximum mass at the coupling point where the value has changed during the current stage of approval.

Unless otherwise provided for in point 4.1 and this point the additional plate shall comply with the requirements set out in Annex I and Annex II to Regulation (EU) No 19/2011.

▼B

Appendix

Model of the manufacturer's additional plate

The example below is given as a guide only.

MANUFACTURER'S NAME (stage 3)
e2*201X/XX*2609
Stage 3
WD9VD58D98D234560
1 500 kg
2 500 kg
1 – 700 kg
2 – 810 kg

▼B

ANNEX X

ACCESS TO VEHICLE OBD INFORMATION AND VEHICLE REPAIR AND MAINTENANCE INFORMATION

▼M9

1. Introduction

This Annex lays down technical requirements for the access to vehicle OBD information and vehicle repair and maintenance information regardless of the vehicle powertrain type.

▼B

2. Access to vehicle OBD information and vehicle repair and maintenance information

▼M2

2.1. A manufacturer shall put in place the necessary arrangements and procedures, in accordance with Article 61(2), second subparagraph, first sentence, to ensure that vehicle OBD information and vehicle repair and maintenance information is accessible through websites. ►M9 Compliance with the obligation for manufacturer to provide information about the vehicle OBD system and vehicle repair and maintenance information on their websites through a standardised format shall be presumed by conforming to Part 1 'General information and use case definition', Part 2 'Technical requirements', Part 3 'Functional user interface requirements' and Part 4 'Conformance test' of standard EN ISO 18541 – 2021 and Part 5 'Heavy duty specific provision' 'Road vehicles – Standardized access to automotive repair and maintenance information (RMI)' of standard EN ISO 18541 – 2018. ◄ Access to vehicle OBD information and vehicle repair and maintenance information shall be granted in a readily accessible and prompt manner.

▼B

2.2. An approval authority shall only grant type-approval after receiving from the manufacturer a certificate on access to vehicle OBD information and vehicle repair and maintenance information.

2.3. The certificate on access to vehicle OBD information and vehicle repair and maintenance information shall serve as the proof of compliance with Article 64.

2.4. The certificate on access to vehicle OBD information and vehicle repair and maintenance information shall be drawn up in accordance with the model set out in Appendix 1.

▼M9

2.5. The vehicle repair and maintenance information shall include the following:

2.5.1. an unequivocal identification of the vehicle and the resulting list of factory-fitted options, as well as of systems, components, separate technical units, parts or equipment for which the manufacturer is responsible;

▼M2

2.5.2. service handbooks, including service and maintenance records, and technical specifications references regarding fluids including on lubricants, brake fluids and cooling liquids;

▼B

2.5.3. technical manuals;

▼M9

2.5.4. information about systems, components, separate technical units, parts, equipment and diagnosis (including minimum and maximum theoretical values for measurements), including information about functions and capabilities necessary for calibration and repair of Advanced Driver Assistance Systems (ADAS) or Driver Control Assistance Systems (DCAS) and related components);

▼B

2.5.5. wiring diagrams;

2.5.6. diagnostic trouble codes, including manufacturer specific codes;

▼M9

2.5.7. information required to determine whether a software update or variant coding is necessary for a specific repair and maintenance operation;

2.5.7a. information required for the identification of the correct software update or variant coding for each system, component, separate technical unit, part or equipment requiring a software update.

By way of exception from point 2.1, if the determination of the correct software version or variant coding requires a backend connection, the manufacturer shall not be required to publish the information required for the identification of the correct software update or variant coding for each system, component, separate technical unit, part or equipment requiring a software update on the website;

2.5.8. information provided concerning, and delivered by means of, proprietary tools and equipment including the information of any additional tooling, equipment and the user instructions, that are required to carry out a component or system calibration;

▼B

2.5.9. data record information and two-directional monitoring and test data;

2.5.10. standard work units or time periods for repair and maintenance tasks if they are made available to authorised dealers and repairers of the manufacturer either directly or through a third party;

2.5.11. in case of multi-stage type-approval, the information required under point 3, and all other information necessary to comply with the requirements set out in Article 61.

▼M9

2.5.12. information provided by the manufacturer to his authorised partners, dealers and repairers or used by the manufacturer for repair and maintenance purposes, necessary for the diagnosis and, where applicable, the repair of traction battery systems as well as its exchangeable units including battery modules;

2.5.13. vehicle type specific information necessary for the safe handling of parts and components, in particular information necessary for the protection against electric, thermic and chemical hazards from traction batteries; as available to the vehicle manufacturer or its partners.

▼B

2.6. The manufacturer shall make available to interested parties the following information:

▼B

2.6.1. relevant information to enable the development of replacement components that are critical to the correct functioning of the OBD system;

▼M9

2.6.2. the following information:

(a) diagnostic description data referred to in point 3 of appendix 2. The manufacturer shall ensure that this data meets the following requirements:

(i) it is made available as electronic directly processable datasets;

(ii) it is of the same level of detail as used by the vehicle manufacturer proprietary diagnostic tools;

(iii) it is comprehensively documented;

(b) descriptions of necessary off- and onboard interactions needed for the completion of any repair and maintenance job.

The vehicle manufacturer shall make the information referred in point (a) available only for vehicle types for which the type-approval certificate was first granted after 1 September 2020;

2.6.3. information on how to acquire proprietary tools and equipment.

2.6a. The manufacturer shall make available to manufacturers of repair equipment and generic diagnostic tools all information, technical specification and user instructions for the repair, maintenance and diagnosis of ADAS/DCAS systems by diagnostic tools.

2.6b. The information referred to in points 2.6 and 2.6a shall be made available in accordance with the terms and conditions stipulated by the manufacturer in compliance with this Regulation, including payment terms and conditions or use limitations and fees required in accordance with Article 63(1).

▼B

2.7. For the purposes of point 2.6.1., the development of replacement components shall not be restricted by any of the following:

2.7.1. the unavailability of pertinent information;

2.7.2. the technical requirements relating to malfunction indication strategies if the OBD thresholds are exceeded or if the OBD system is unable to fulfil the basic OBD monitoring requirements of this Regulation;

2.7.3. specific modifications to the handling of OBD information to deal independently with vehicle operation on petrol or on gas;

2.7.4. the type-approval of gas-fuelled vehicles that contain a limited number of minor deficiencies.

2.8. For the purposes of point 2.6.2, where manufacturers use diagnostic and test tools in accordance with ISO 22900 – Modular vehicle communication interface (MVCI) – and ISO 22901 – Open diagnostic data exchange (ODX) in their franchised networks –, the ODX files shall be accessible to independent operators via the website of the manufacturer.

▼M9

2.9. For the purpose of accessing vehicle OBD information, diagnostics, repair and maintenance, monitoring and inspection, vehicle manufacturer shall enable bi-directional access to the in-vehicle data stream, through all of the following means:

(a) the serial data port on the standardised data link connector referred to in Appendix 1 paragraph 6.5.3 of Annex C5 to UN Regulation No 154 [1] respectively in accordance with paragraph 4.7.3 of Annex 9B and the reference standard documents set out in Appendix 6 to that Annex to UN Regulation No 49 [2];

(b) any other in-vehicle means of access that is provided by the manufacturer to his authorised partners, dealers and repairers or is used by the manufacturer for repair and maintenance purposes, including Ethernet connectors, non-standardized pins on the standardized OBD port, application programming interfaces used for aftermarket service integration, and wireless local area networks;

(c) any facility that is provided by the manufacturer to his authorized partners, dealers and repairers or is used by the manufacturer to enable remote access to vehicle OBD Information for repair and maintenance, including monitoring and inspection (where monitoring and inspection are performed for repair and maintenance) or remote repair and diagnostics services.

Where the vehicle is in motion, the manufacturer may choose to make the data stream available only for read-only functions, on condition that the manufacturer applies the same restriction to its own authorized partners, dealers and repairers.

The manufacturer may implement conditions for accessing the vehicle data stream, to the extent this is necessary and proportionate for compliance with Article 4(5)(d) and Annex II line D4 of Regulation (EU) 2019/2144 and Articles 4(7) 4(8) and Article 6(3) of Regulation (EU) 2024/1257. For access using the means described in 2.9 (a) and (b), such conditions shall not go beyond the conditions that the manufacturer is allowed to apply pursuant to Appendix 4 to this Annex.

---

(1) Regulation No 154 of the Economic Commission for Europe of the United Nations (UN/ECE) – Uniform provisions concerning the approval of light duty passenger and commercial vehicles with regards to criteria emissions, emissions of carbon dioxide and fuel consumption and/or the measurement of electric energy consumption and electric range (WLTP) [2021/2039] (OJ L 423, 26.11.2021, p. 1, ELI: http://data.europa.eu/eli/reg/2021/2039/oj).

(2) Regulation No 49 of the Economic Commission for Europe of the United Nations (UN/ECE) – Uniform provisions concerning the measures to be taken against the emission of gaseous and particulate pollutants from compression-ignition engines and positive ignition engines for use in vehicles [2023/64] (OJ L 14, 16.1.2023, p. 1, ELI: http://data.europa.eu/eli/reg/2023/64/oj).

▼B

3. Multi-stage type-approval

3.1. In the case of a multi-stage type-approval, the final manufacturer shall be responsible for providing access to vehicle OBD information and vehicle repair and maintenance information regarding its own manufacturing stage(s) and the link to the previous stage(s).

3.2. In addition, the final manufacturer shall on its website provide independent operators with the following information:

3.2.1. the website address of the manufacturer(s) responsible for the previous stage(s);

3.2.2. the name and address of all the manufacturers responsible for the previous stage(s);

3.2.3. the type-approval number(s) of the previous stage(s);

3.2.4. the engine number.

3.3. Each manufacturer responsible for a particular stage or stages of type-approval shall be responsible for providing through his website access to vehicle OBD and vehicle repair and maintenance information regarding the stage(s) of type-approval for which he is responsible and the link to the previous stage(s).

3.4. The manufacturer responsible for a particular stage or stages of type-approval shall provide the following information to the manufacturer responsible for the next stage:

3.4.1. the certificate of conformity relating to the stage(s) for which he is responsible;

3.4.2. the certificate on access to vehicle OBD information and vehicle repair and maintenance information, including its annexes;

3.4.3. the type-approval number corresponding to the stage(s) for which he is responsible;

3.4.4. the documents referred to in points 3.4.1, 3.4.2 and 3.4.3 as provided by the manufacturer(s) involved in the previous stage(s).

3.5. Each manufacturer shall authorise the manufacturer responsible for the next stage to pass the documents to the manufacturers responsible for any subsequent stages and the final stage.

3.6. In addition, on a contractual basis, the manufacturer responsible for a particular stage or stages of type-approval shall:

3.6.1. provide the manufacturer responsible for the next stage with access to vehicle OBD information and vehicle repair and maintenance information and interface information corresponding to the particular stage(s) for which he is responsible;

3.6.2. provide, at the request of a manufacturer responsible for a subsequent stage of type-approval, with access to vehicle OBD information and vehicle repair and maintenance information and interface information corresponding to the particular stage(s) for which he is responsible.

3.7. A manufacturer, including a final manufacturer, may only charge fees in accordance with Article 63 concerning the particular stage(s) for which he is responsible.

▼B

A manufacturer, including a final manufacturer, shall not charge fees for providing information relating to the website address or contact details of any other manufacturer.

4. Customer adaptations

4.1. By derogation from point 2, if the number of systems, components or separate technical units subject to a specific customer adaptation is lower than 250 units produced worldwide, repair and maintenance information for the customer adaptation shall be provided in a readily accessible and prompt manner, and in a manner which is non-discriminatory compared to the provisions given or access granted to authorised dealers and repairers.

For the servicing and reprogramming of the electronic control units relating to the customer adaptation, the manufacturer shall make the respective proprietary specialist diagnostic tool or test equipment available to independent operators as provided to authorised repairers.

The customer adaptations shall be listed on the manufacturer's repair and maintenance information website and mentioned in the certificate on access to vehicle OBD information and vehicle repair and maintenance information at the time of type-approval.

4.2. Manufacturers shall make the proprietary specialist diagnostic tool or test equipment to service the customer-adapted systems, components or technical units available to independent operators via sale and rent.

4.3. The manufacturer shall mention in the certificate on access to vehicle OBD information and vehicle repair and maintenance information, at the time of type-approval, the customer adaptations for which the obligation under point 2 to provide access to vehicle OBD information and vehicle repair and maintenance information in a standardised format is derogated from and any electronic control unit related to them.

Those customer adaptations and any electronic control unit related to them shall also be listed on the manufacturer's repair and maintenance information website.

5. Small volume manufacturers

5.1. By derogation from point 2, manufacturers whose worldwide annual production of a type of vehicle, system, component or separate technical unit subject to this Regulation is for vehicles of category M_1 and N_1 less than 1 000 vehicles or for vehicles of category M_2, M_3, N_2, N_3 and O less than 250 units, shall provide access to vehicle repair and maintenance information in a readily accessible and prompt manner, and in a manner that is non-discriminatory compared to the provisions given or access granted to authorised dealers and repairers.

5.2. The vehicle, system, component and separate technical unit subject to point 5.1 shall be listed on the manufacturer's repair and maintenance information website.

5.3. The approval authority shall inform the Commission of each type-approval granted to small volume manufacturers.

▼B

6. Requirements

▼M9

6.1. Compliance with the obligation for manufacturer to provide vehicle repair and maintenance information on their websites through a standardised format shall be presumed by conforming with the Parts of standard ISO 18541-1:2021 to ISO 18541-4:2021 and ISO 18541-5:2018, as referred to in point 2.1.

Those requiring the right to duplicate or republish such information shall negotiate directly with the manufacturer concerned. Information for training material shall also be available, and it may be presented through other media than websites.

6.1.1. For the purpose of publishing repair and maintenance information, the manufacturer shall make the information available as files in the format which serves for direct electronic processing of the sets of data contained in those files. The information shall be of the same level of detail as is used by the manufacturer for repair and maintenance purposes. It shall be documented for the purposes of interpretation and updated at the frequency agreed with the independent operator Updates shall be available with the same frequency and timing as they are available to the authorised dealers and repairers. Information shall be offered in packages based on technical information by use case, as available to the manufacturer. The information referred to in the first sentence of this point shall be provided on the basis of terms and conditions stipulated by the manufacturer in compliance with this Regulation, such as payment terms and any compatible conditions or use limitations and the fees required in compliance with Article 63(1) of this Regulation. Information packages defined based on criteria reflecting the information requirements for Use Case 5.1.1., Use Case 5.1.2, Use Case 5.2, Use Case 5.3, Use Case 5.4, Use Case 5.5, Use Case 5.7, Use Case 5.8, Use Case 5.9, Use Case 8 and Use Case 11 of standard ISO 18541-1 2021 shall be presumed compliant.

The manufacturer shall only provide, as from 23 June 2027, information packages defined based on criteria reflecting the information requirements needed for Use Case 5.3 and Use Case 5.4 in ISO 18541-1:2021 that are only available per vehicle identification number (VIN) where an independent repairer requests so via an Application Programming Interface (API [1]). In such cases, the independent repairer shall transmit a VIN-specific request to the manufacturer through a third party acting on the basis of an agreement with the manufacturer.

Where the information packages are defined based on criteria reflecting the information requirements for Use Case 8 in ISO 18541-1:2021, the manufacturer shall provide to such a third party, as from 23 June 2027,

[1] As defined in Article 2 of Commission Implementing Regulation (EU) 2023/138 of 21 December 2022 laying down a list of specific high-value datasets and the arrangements for their publication and re-use (OJ L 19, 20.1.2023, p. 43, ELI: http://data.europa.eu/eli/reg_impl/2023/138/oj).

▼M9

an API that allows the independent repairer to view and update the electronic maintenance history subject to the additional conditions as specified in the ISO and, where appropriate, manufacturer's conditions and processes used to obtain customer agreement. The manufacturer shall do so subject to the same or equivalent processes and required information as those specified in the manufacturer's repair and maintenance information website. In such cases the independent repairer, with the customer's agreement, may transmit a repair or maintenance record update request to the manufacturer through a third party acting on the basis of an agreement with the manufacturer. A certificate compliant with Recommendation ITU-T X.509 of the International Telecommunication Union may be used to verify the identity the independent repairer.

Access to such APIs, including for updating electronic maintenance history entries shall be subject to Article 63(1).

The information shall be structured in a way so that it is later possible to search and filter the information contained in the package by model type classification criteria and other classification criteria used by the vehicle manufacturer own network.

6.1.2. Information on all parts of the vehicle, with which the vehicle, as identified by the VIN and any additional criteria such as wheelbase, engine output, trim level or options, is equipped by the vehicle manufacturer and that can be replaced by spare parts offered by the vehicle manufacturer to its authorised repairers or dealers or third parties by means of reference to original equipment (OE) parts number, shall be made available, in the form of machine readable and electronically processable datasets, in a database that is easily accessible to independent operators.

That database shall comprise the VIN, OE parts numbers, OE naming of the parts, validity attributes (valid-from and valid-to dates), fitting attributes and, where applicable, structuring characteristics.

The information in the database shall be updated regularly. If this information is available to authorised dealers, the updates shall include all modifications to individual vehicles after their production.

▼B

6.2. ►M2 Access to vehicle security features shall be made available to independent operators under protection of security technology in accordance with the following requirements: ◄

6.2.1. data shall be exchanged ensuring confidentiality, integrity and protection against replay;

▼M9

6.2.2. the standard https//ssl-tls (RFC5246) or any successor to this standard shall be used;

6.2.3. security certificates in accordance with international standard ISO/IEC 9594-8:2020 shall be used for mutual authentication of independent operators and manufacturers;

▼B

6.2.4. the independent operator's private key shall be protected by secure hardware.

▼B

6.3. ►M2 The procedure for the approval and authorisation of independent operators to access vehicle security features as referred to in point 6.2 is set out in Appendix 3. The role and responsibilities of the bodies involved in the accreditation, approval and authorisation of independent operators are detailed through functional requirements consisting of examples and use cases laid down in Commission Notice. ◄ The independent operator shall be approved and authorised for this purpose on the basis of documents demonstrating that he pursues a legitimate business activity and has not been convicted of any relevant criminal activity.

▼M2

For the purposes of that procedure, operators shall not be considered to pursue a legitimate business activity where they advertise or offer repair or maintenance operations that would negatively impact the emissions performance of the vehicle. This shall include:

(a) deactivating or removing pollution control devices or emission control systems, or degrading their performance or concealing their malfunction;

(b) installing defeat devices ([1]), or defeat strategies ([2]);

(c) deactivating, removing or tampering with devices for the monitoring of the consumption of fuel or electric energy, or tampering with odometer readings;

(d) tampering with the engine control unit, including the rated engine power.

▼M9

6.4. Reprogramming of control units, variant coding and activation of replacement parts shall be conducted using non-proprietary hardware, without any dependency on manufacturer hardware in accordance with any of the following:

(a) international standard ISO 22900-2;

(b) SAE J2534-1;

(c) SAE J2534-2;

(d) TMC RP1210B;

(e) SOVD-Standard ISO/DIS 17978-1.

Where conducted using Ethernet, reprogramming of control units, variant coding and activation of replacement parts shall be conducted in accordance with either ISO22900-2 or J2534-2.

For the validation of the compatibility of the manufacturer-specific application and the vehicle communication interfaces (VCI), complying with international standard ISO 22900-2 or with SAE J2534-1 or SAE J2534-2 or TMC RP1210B, the manufacturer shall offer either a validation of independently developed VCIs or the information and loan of any special hardware, required for a VCI manufacturer to conduct such validation.

The manufacturer may charge reasonable and proportionate fees for such validation or information and hardware. Those fees shall not discourage use of such validation or information and hardware.

([1]) As defined in Article 3(10) of Regulation (EC) No 715/2007.
([2]) As defined in Article 3(8) of Regulation (EC) No 595/2009.

▼M9

6.4a. As from 23 December 2026, the vehicle manufacturer shall make available to independent diagnostic tool manufacturer any of the following software or information for vehicle type for which the type-approval certificate was first granted after 1 September 2020:

(a) software or webservice interfaces to independent diagnostic tool manufacturers for their integration, that enables variant coding, pairing to a vehicle an original replacement part (including software and hardware compatible (as defined by the vehicle manufacturer) remanufactured or re-used part) or a vehicle manufacturer authorized replacement part, as well as the reprogramming of control units with a vehicle's original equipment software according to vehicle manufacturer's instructions, or;

(b) necessary information, processes and resources necessary to implement variant coding and reprogramming in independent diagnostic tool of the independent diagnostic tool manufacturer.

However, by way of derogation from the time limit specified in the first sentence of this point, the vehicle manufacturer shall make available the software or information referred in points (a) and (b) above as from the following dates:

(i) 23 June 2027, with regard to vehicles for which the type-approval was first granted after 1 September 2020 but before 6 July 2022;

(ii) 23 June 2028 for any operation involving or dependent on performing software updates.

6.4b. Until the vehicle manufacturer makes available the software or information for vehicle type referred to in point 6.4a and for the period of two years following that date, the use of vehicle manufacturer's diagnostic hardware and diagnostic software by remote service providers, as referred to in point 1.2 of Appendix 4, for the purposes of re-programming and variant coding or parts activation shall be subject to the same fees and payment conditions as those applicable to independent repairers, irrespective of whether the diagnostic tools are used remotely.

Furthermore, vehicle manufacturer shall share with any interested diagnostic tool manufacturers, as soon as they are available:

(a) the information necessary for implementing the API between the relevant vehicle manufacturer's and diagnostic tool manufacturers' systems:

(i) no later than 23 June 2027 for any operation involving or dependent on performing software updates; and

(ii) for other operations, no later than 23 September 2026; or

(iii) with regard to vehicles for which the type-approval was first granted before 6 July 2022, no later than 23 December 2026;

▼M9

(b) the information necessary for testing the update functionality and interaction for hardware, no later than 23 December 2027 for any operation involving or dependent on performing software updates.

6.4c. Decoupling of components, separate technical units, parts and equipment, except for those that have been originally designed not to be de-coupled, shall be done in accordance with the process set out in this point. It shall not be subject to any conditions other than those referred to in this point.

The manufacturer shall put in place a process for the de-coupling of components, separate technical units, parts and equipment. For the purpose of installation of a re-used component, separate technical unit, part or equipment, the vehicle manufacturer defined processes may include a requirement to provide the unique identifier (including, where relevant, a unit's serial number) of this component, separate technical units, part or equipment concerned, and the VIN of the vehicle, as well as an a requirement to obtain an agreement from the owner or the lessee of the vehicle, where they are identifiable. Where an agreement is required, it may be provided asynchronously from the part deinstallation.

For the purpose of remanufacturing in an industrial process, whereby a worn or failed component, separate technical units, part or equipment is restored to its original specification, the VIN of the original vehicle will not be required for de-coupling from the original vehicle. In this case the unique identifier of the component and the agreement the owner or the lessee of the vehicle, where they are identifiable, may be required.

All independent operators, including remanufacturers and refurbishers, authenticated in accordance with the requirements specified in Appendix 4, shall have equal access to these processes.

For the purpose of authentication of such an operator, where the vehicle manufacturer decoupling process is to be completed on their off-board platforms, authentication credentials issued in accordance with point 9.2 of Appendix 4, or those used for access to the vehicle manufacturer RMI website shall be accepted.

▼B

6.5. The requirements of point 6.4. shall not apply in the case of reprogramming of speed limitation devices and recording equipment.

6.6. All emission-related DTCs shall be consistent with Annex XI to Regulation (EC) No 692/2008 and Annex X to Regulation (EU) No 582/2011.

6.7. For access to any vehicle OBD information and vehicle repair and maintenance information other than that relating to secure areas of the vehicle, registration requirements for use of the manufacturer's website by an independent operator shall require only such information as is necessary to confirm how payment for the information is to be made. For information concerning access to secure areas of the vehicle, the independent operator shall present a certificate in accordance with international standard ISO 20828 to identify himself and the organisation to which he belongs and the manufacturer shall respond with his own

▼B

certificate in accordance with international standard ISO 20828 to confirm to the independent operator that he is accessing a legitimate site of the intended manufacturer. Both parties shall keep a log of any such transactions indicating the vehicles and changes made to them under this provision.

6.8. Manufacturers shall indicate in their repair information websites the type-approval number by model.

6.9. If the vehicle OBD information and vehicle repair and maintenance information that is available on a manufacturer's website does not contain specific relevant information to permit the proper design and manufacture of alternative fuels retrofit systems, any interested alternative fuels retrofit system manufacturer shall be able to obtain the information required by contacting the manufacturer directly with such a request. Contact details for that purpose shall be clearly indicated on the manufacturer's website and the information shall be provided within 30 days. It shall only be necessary to provide such information for alternative fuels retrofit systems that are subject to UN Regulation No 115 or for alternative fuels retrofit components that form part of systems subject to UN Regulation No 115. In addition, it shall only be necessary to provide such information in response to a request that clearly specifies the exact specification of the vehicle model for which the information is required and that specifically confirms that the information is required for the development of alternative fuels retrofit systems or components subject to UN Regulation No 115.

7. Requirements for type-approval

7.1. In order to receive a type-approval, the manufacturer shall submit the filled in certificate, the template of which is provided in Appendix 1.

▼M9

———————

7.4. On the basis of a completed certificate on access to vehicle OBD information and vehicle repair and maintenance information, the approval authority may presume that the manufacturer has put in place satisfactory arrangements and procedures with regard to access to vehicle OBD information and vehicle repair and maintenance information, provided that no complaint has been made.

7.5. The vehicle OBD information and vehicle repair and maintenance information shall be provided to independent operators at the latest on the date on which the vehicle is placed on the market.

▼B

Appendix 1

Manufacturer's certificate on access to vehicle OBD information and vehicle repair and maintenance information

(Manufacturer): …

(Address of the manufacturer): …

Certifies that

it provides access to vehicle OBD information and vehicle repair and maintenance information in compliance with the provisions of:

Article 61 of Regulation (EU) 2018/858 of the European Parliament and of the Council ([1]) and Annex X to that Regulation

with respect to the types of vehicle, system, component or separate technical unit listed in an attachment to this certificate.

The following derogations are applied: Customer adaptations (*) — Small volume (*) —.

The principal website addresses through which the relevant information, which is hereby certified to be in compliance with those provisions, may be accessed, are listed in an attachment to this certificate along with the contact details of the responsible manufacturer's representative who has signed this certificate.

Where applicable: The manufacturer hereby also certifies that he has complied with the obligation of Article 62 of Regulation (EU) 2018/858 to provide the relevant information concerning previous approvals of these types of vehicle no later than six months after the date of type-approval.

Done at … [Place]

On … [Date]

[Signature] [Position]

Annexes:

— Annex A: Website addresses;

— Annex B: Contact details;

— Annex C: Types of vehicle, system, component or separate technical unit.

Explanatory note:

(*) Delete where not applicable.

([1]) Regulation (EU) 2018/858 of the European Parliament and of the Council of 30 May 2018 on the approval and market surveillance of motor vehicles and their trailers, and of systems, components and separate technical units intended for such vehicles, amending Regulations (EC) No 715/2007 and (EC) No 595/2009 and repealing Directive 2007/46/EC (OJ L 151, 14.6.2018, p. 1).

▼B

ANNEX A

WEBSITE ADDRESSES REFERRED TO IN THIS CERTIFICATE:

▼B

ANNEX B

CONTACT DETAILS OF THE MANUFACTURER'S REPRESENTATIVE REFERRED TO IN THIS CERTIFICATE:

▼B

ANNEX C

TYPES OF VEHICLE, SYSTEM, COMPONENT OR SEPARATE TECHNICAL UNIT:

▼B

Appendix 2

Vehicle OBD information

1. The vehicle manufacturer shall provide the information required in this Appendix for the purposes of enabling the manufacture of OBD-compatible replacement or service parts and diagnostic tools and test equipment.

2. Upon request, the following information shall be made available, on a non-discriminatory basis, to any interested manufacturer of components, diagnostic tools or test equipment:

2.1. a description of the type and number of the preconditioning cycles used for the original type-approval of the vehicle;

2.2. a description of the type of the OBD demonstration cycle used for the original type-approval of the vehicle for the component monitored by the OBD system;

2.3. a comprehensive document describing all sensed components with the strategy for fault detection and MI activation (fixed number of driving cycles or statistical method), including a list of relevant secondary sensed parameters for each component monitored by the OBD system and a list of all OBD output codes and format used (with an explanation of each code and format) associated with individual emission-related power-train components and individual non-emission related components, where monitoring of the component is used to determine MI activation. In particular, in the case of types of vehicles that use a communication link in accordance with ISO 15765-4 'Road vehicles — Diagnostics on controller area network (CAN) — Part 4: Requirements for emissions-related systems', a comprehensive explanation for the data given in service $ 05 Test ID $ 21 to FF and the data given in service $ 06, and a comprehensive explanation for the data given in service $ 06 Test ID $ 00 to FF, for each OBD monitor ID supported, shall be provided.

In case other communication protocols standards are used, equivalent comprehensive explanation shall be provided.

This information may be provided in the form of a table, with the following column and row headings:

Component Fault code; Monitoring strategy; Fault detection criteria; MI activation criteria; Secondary parameters; Preconditioning Demonstration test.

Catalyst P0420 Oxygen sensor; 1 and 2 signals; Difference between sensor 1 and sensor 2 signals; 3rd cycle Engine speed; engine load; A/F mode; catalyst temperature; Two Type 1 cycles; Type 1.

▼M9

3. Information required for the manufacturing of diagnostic tools

In order to facilitate the provision of generic diagnostic tools for multi-make repairers, vehicle manufacturer shall make available the information referred to in points 3.1, 3.2 and 3.3. That information shall include all diagnostic tool functions and all the links to repair information and troubleshooting instructions. The access to the information may be subject to the payment of a reasonable fee.

▼B

3.1. Communication protocol information

The following information shall be required indexed against vehicle make, model and variant, or another workable definition such as the VIN or the vehicle and systems identification:

3.1.1. any additional protocol information system necessary to enable complete diagnostics in addition to the standards prescribed in paragraph 4.7.3 of Annex 9B to UN Regulation No 49 and in paragraph 6.5.1.4 of Annex 11 to UN Regulation No 83, including any additional hardware or software protocol information, parameter identification, transfer functions, 'keep alive' requirements, or error conditions;

3.1.2. details of how to obtain and interpret all the fault codes that do not comply with the standards prescribed in paragraph 4.7.3 of Annex 9B to UN Regulation No 49 and in paragraph 6.5.1.4 of Annex 11 to UN Regulation No 83;

3.1.3. a list of all available live data parameters, including scaling and access information;

3.1.4. a list of all available functional tests, including device activation or control and the means to implement them;

3.1.5. details of how to obtain all component and status information, time stamps, pending DTC and freeze frames;

3.1.6. resetting adaptive learning parameters, variant coding and replacement component setup, and customer preferences;

3.1.7. Electronic control unit (ECU) identification and variant coding;

3.1.8. details of how to reset service lights;

3.1.9. location of diagnostic connector and connector details;

3.1.10. engine code identification.

3.2. Test and diagnosis of OBD monitored components

The following information shall be required:

3.2.1. a description of tests to confirm the functionality, at the component or in the harness;

3.2.2. information concerning the test procedure, including test parameters and component information;

3.2.3. connection details, including minimum and maximum input and output and driving and loading values;

3.2.4. values to be expected under certain driving conditions, including idling;

3.2.5. electrical values for the component in its static and dynamic states;

3.2.6. failure mode values for each of the scenarios;

3.2.7. failure mode diagnostic sequences, including fault trees and guided diagnostics elimination.

3.3. Data required to perform the repair

The following information shall be required:

3.3.1. ECU and component initialisation (in the event of replacements being fitted);

3.3.2. initialisation of new or replacement ECU's where relevant using pass-through (re-) programming techniques.

▼M2

Appendix 3

Procedure for the approval and authorisation of independent operators to access vehicle security features [1]

1. Scope

This Appendix contains the requirements for the purposes of approval and authorisation of independent operators requiring access to security-related vehicle repair and maintenance information (RMI).

It specifies in detail the process and the bodies required to approve and authorise independent operators to be granted access to security-related vehicle repair and maintenance information for light passenger and commercial vehicles and heavy duty vehicles.

2. Definitions and abbreviated terms

2.1. Definitions

For the purposes of this Appendix, the following definitions shall apply:

2.1.1. ‘Accreditation’

‘accreditation’ shall mean accreditation as defined in Article 2, point 10 of Regulation (EC) No 765/2008

2.1.2. ‘IO employee’

‘IO employee’ shall mean the employee of an approved independent operator (IO) who, upon authorisation from his or her conformity assessment body (CAB), will have access to security-related RMI

2.1.3. ‘Security-related repair and maintenance information’ or ‘security-related RMI’

‘security-related repair and maintenance information’ or ‘security-related RMI’ shall mean the information, software, functions and services required to repair and maintain the features that are included in a vehicle by the manufacturer to prevent the vehicle from being stolen or driven away and to enable the vehicle to be tracked and recovered.

2.1.4. ‘Approval inspection certificate’

‘approval inspection certificate’ shall mean the certificate issued by the CAB to IOs complying with the approval criteria set out in this Appendix and which confirms that those IOs are approved and that IO employees can request the authorisation to access security-related RMI.

2.1.5. ‘Authorisation inspection certificate’

‘authorisation inspection certificate’ shall mean the certificate issued by the CAB to IO employees complying with the authorisation criteria set out in this Appendix and which confirms that those employees are authorised to access security-related RMI on the website of a vehicle manufacturer.

[1] The requirements set out in this Appendix are based on those laid down in the ‘Scheme for accreditation, approval and authorization to Access Security-related Repair and Maintenance Information (RMI)’ validated on 19 May 2016 by the European cooperation for Accreditation (https://www.vehiclesermi.eu/).

▼M2

2.1.6. ‘Trust centre’ or ‘TC’

‘trust centre’ or ‘TC’ shall mean the body designated by SERMI and approved by the Commission and that is responsible for:

(a) managing the digital certificates and authorisation status of the IO employees and for providing to the CAB the necessary security tokens and digital certificates for authorised IO employees;

(b) providing a vehicle manufacturer with information regarding the authorisation status of an IO employee.

2.1.7. ‘Security token’

‘security token’ shall mean a device that allows a secure authentication of an IO.

2.1.8. ‘Digital certificate’

‘digital certificate’ shall mean a digital certificate which requires a digital signature of the issuing trust centre to bind a public key to the identity of the IO employee in accordance with the standard ISO 9594.

2.1.9. ‘Authorisation database’

‘authorisation database’ shall mean a database held by the trust centre and which contains the authorisation details of the anonymised authorised IO employees and the registration of approved IOs.

2.1.10. ‘Certification database’

‘certification database’ shall mean a database held by the trust centre to manage the digital certificate validity and the identifiers of authorised IO employees.

2.1.11. ‘European cooperation for Accreditation’ or ‘EA’

‘European cooperation for Accreditation’ or ‘EA’ shall mean the body recognised by the Commission in accordance with Article 14 of Regulation (EC) No 765/2008 and which is responsible for the development, maintenance and implementation of accreditation in the Union.

2.1.12. ‘Forum for Access to Security-Related Vehicle RMI’ or ‘SERMI’

The ‘Forum for Access to Security-Related Vehicle RMI’ or ‘SERMI’ means the entity that is in charge of coordinating and advising the Commission on the implementation of the procedures of accreditation, approval and authorisation for the purpose of accessing security-related RMI.

2.1.13. ‘Relevant authorities’

‘relevant authorities’ shall mean those public authorities that have a legal mandate to act in the area of vehicle security crime protection, investigation and prosecution.

▼M9

2.1.14. ‘Remote Service Supplier (RSS)’

‘remote service supplier (RSS)’ shall mean a service provider performing remotely, as a service provided to the IO in the context of its SERMI related activities, the programming, fitting or activating of parts and equipment on a vehicle.

2.1.15. ‘RSS employee’

‘RSS employee’ shall mean the employee of an approved RSS who, upon authorisation by the CAB, will have access to security-related RMI.

▼M2

3. Accreditation of CABs, approval of IOs and authorisation of IO employees

Only CABs that are accredited by the national accreditation body ('NAB'), as defined in Article 2, point 11 of Regulation (EC) No 765/2008, of the Member State in which they are established shall issue approval inspection certificates certifying that an IO has been approved and authorisation inspection certificates certifying that an IO employee is to access security-related RMI.

The approval of the IO and the authorisation of the IO employee shall be granted for a period of 60 months starting from the date of issuance of the relevant inspection certificates.

▼M9

IOs wishing to receive security-related RMI shall obtain an approval inspection certificate from an accredited CAB.

IO employees who are to handle security-related RMI shall obtain an authorisation inspection certificate from an accredited CAB.

▼M2

CABs shall inform TCs of any approval inspection certificates or authorisation inspection certificates issued, upon which TCs shall create an authorisation record and issue a security token and a digital certificate containing details that allow IO employees to be uniquely identifiable to the vehicle manufacturer RMI website. CABs shall provide individual IO employees with a security token and the digital certificate.

Vehicle manufacturers may demand a fee for the registration of IO employees on those vehicle manufacturers' RMI websites and for access to security-related RMI. Such fee shall be proportionate to the cost for such registration and provision of access. The fees due shall be specified on the vehicle manufacturers' RMI websites. All digital data transfers between IOs, TCs and CABs shall be carried out via business to business (B2B) transactions using secure protocols and in a timely manner.

Figure 1

The bodies involved in the accreditation of CABs, approval of IOs and authorisation of IO employees and their relationship

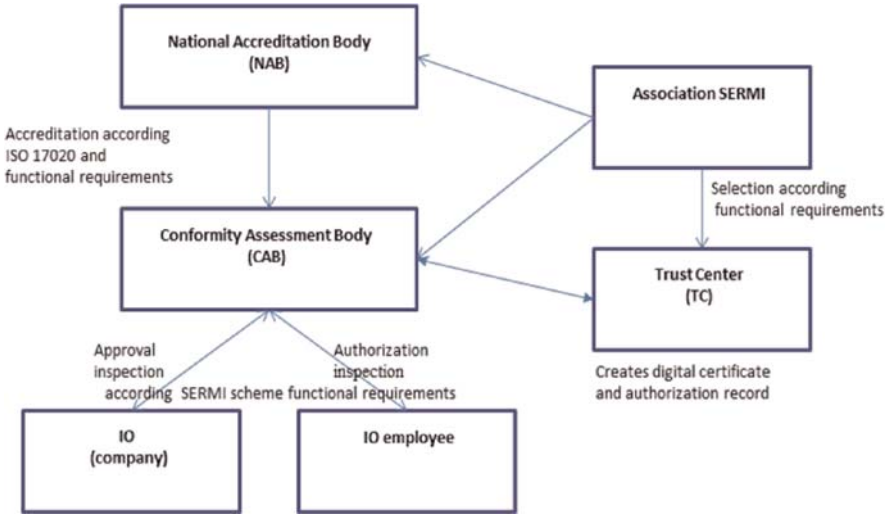

▼M2

A declaration that certifies that the IO pursues a legitimate business activity as referred to in point 6.3 of this Annex shall be signed by the IO requesting to be authorised by the CAB. An IO shall only be approved after an inspection by the CAB that shall verify that this declaration has been signed and that shall assess whether the IO and its individual employees comply with the requirements laid down in this Appendix.

Individual IO employees shall only be authorised after an inspection by a CAB. CABs shall check the documents submitted and shall verify whether the IO employee concerned made a previous request for authorisation that has been rejected by the CAB concerned or any other CAB at Union level.

CABs shall send all data to the TC that are necessary for the TC to produce the digital certificate and the security token, which the CAB shall send to the IO employees..

IO employees that have been authorised shall receive from their CABs the PIN associated with the digital certificate.

Figure 2

IO approval and IO employee authorisation process

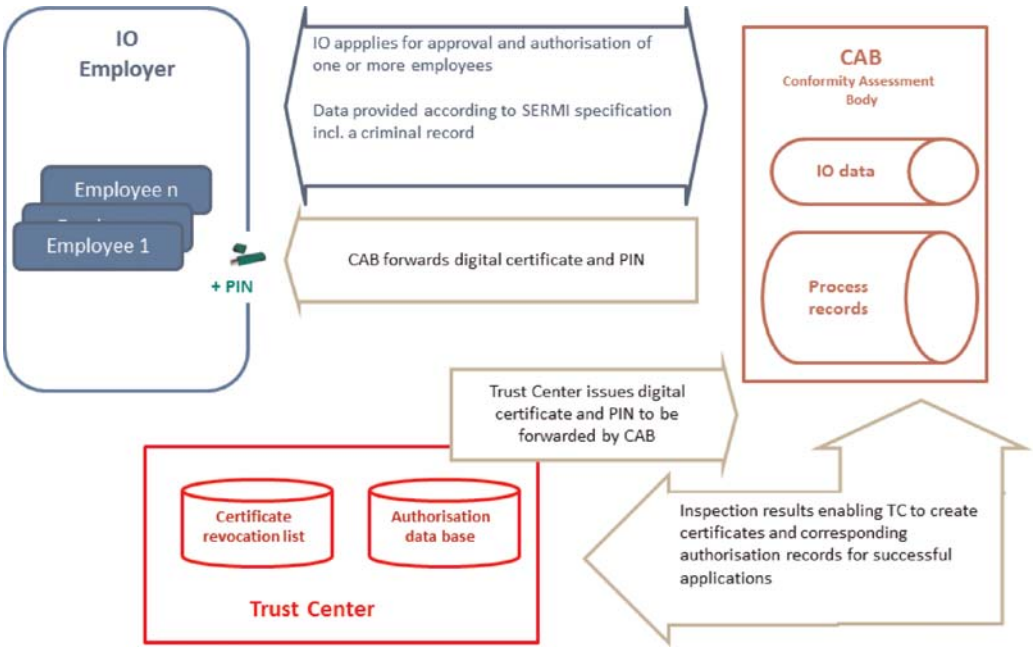

3.1. Overview of the access to security-related RMI

Vehicle manufacturers shall provide access to security-related RMI through their RMI website, provided that the IO employees are authorised and are able to produce the authorisation inspection certificate, and that the IO on whose behalf the IO employees are working has an approval inspection certificate.

Manufacturers may offer access to an on-line ordering facility for security-related parts using a specialised application linked to the RMI website to authorised IO employees that work for approved IOs.

▼M2

Upon receipt of a request for access to an RMI website, the vehicle manufacturers' websites shall require identification through the IO employee unique identifier and request authentication. Authentication of IO employees shall be carried out exclusively using digital certificates. Upon receipt of a digital certificate, vehicle manufacturer RMI websites shall verify the IO employee unique identifier and the current status of the digital certificate and authorisation, by communicating with the TC identified in the digital certificate.

All digital data transfers between IOs, vehicle manufacturers, TCs and CABs shall be carried out via business to business (B2B) transactions, using secure protocols and in a timely manner. Once the IO employee unique identifier and authorisation status of the IO employee have been verified, access to the required security-related RMI shall be provided by the vehicle manufacturer through its website.

Figure 3

Access to security-related RMI

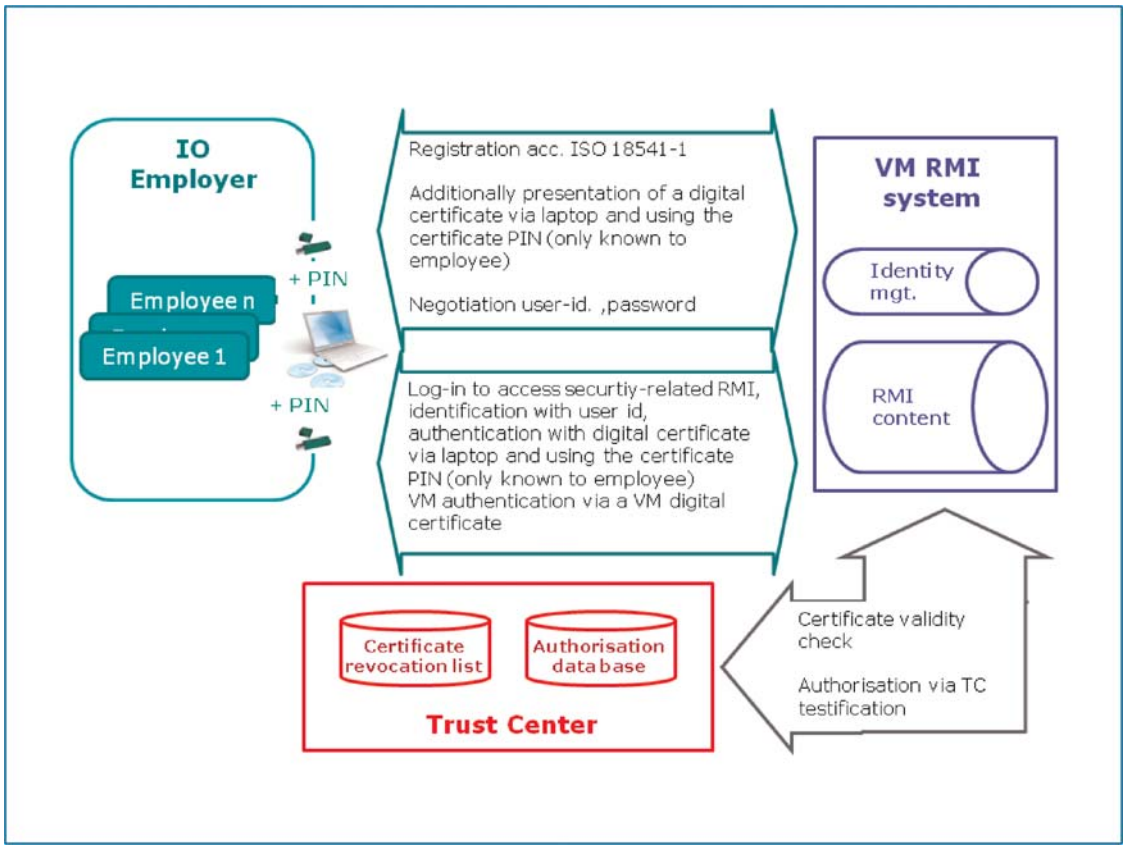

4. Detailed rules concerning access to security-related RMI

4.1. The role of SERMI

4.1.1. Responsibilities and obligations

SERMI shall monitor the implementation of the accreditation process across the Member States and inform the Commission accordingly. SERMI shall advise the Commission on requests for changes to the accreditation process.

▼M2

(a) SERMI shall advise the Commission on requests for changes to the accreditation process. SERMI shall monitor the implementation of the accreditation process across the Member States and inform the Commission accordingly;

(b) SERMI shall consult the Commission on the creation of the TC selection criteria;

(c) SERMI shall advise the Commission on the introduction of technical implementation guidelines for interaction between the entities involved in the process;

(d) SERMI shall follow the EA's rules on scheme ownership;

(e) the members of the SERMI shall be represented by the stakeholders engaged in the process of accreditation, approval and authorisation for the purpose of accessing security-related RMI;

▼M9

(f) SERMI shall manage a list of sanctioned interpretations, to be used exclusively for the purpose of interpreting the scheme.

▼M2

4.1.2. Trust centre selection

The TC shall be selected by SERMI and be notified to the Commission for approval.

Selected TC shall comply with standard ETSI TS 319 411-3, fulfil the requirements on electronic signatures laid down in Regulation (EU) No 910/2014 of the European Parliament and of the Council ([1]) and the requirements laid down in point 4.6 of this Appendix.

In addition, the TC shall:

— have the technical and managerial competence, and the financial viability and experience relevant to the accreditation process;

— have key personnel that has the skills, experience and availability necessary for the accreditation process;

— be able to operate across Member States;

— have in place a quality assurance process at operational level.

4.2. The role of NABs

The NAB shall be responsible for the accreditation of CABs for the purposes of approving IOs and authorising IO employees for access to security-related RMI.

4.2.1. Responsibilities and requirements

The responsibilities and requirements of the NAB are set out in Articles 8 to 12 of Regulation (EC) No 765/2008.

4.2.2. Criteria for CAB accreditation

CABs shall be accredited as type A inspection bodies in accordance with ISO/IEC 17020:2012. CABs shall comply with the requirements concerning the highest level of independence.

Additionally, the NAB shall assess CABs' capability to comply with the requirements laid down in points 4.3.1 to 4.3.4.

([1]) Regulation (EU) No 910/2014 of the European Parliament and of the Council of 23 July 2014 on electronic identification and trust services for electronic transactions in the internal market and repealing Directive 1999/93/EC (OJ L 257, 28.8.2014, p. 73).

▼M2

The personnel in charge of IO inspections shall have a level of knowledge in the automotive vehicle repair and maintenance business and of the automotive aftermarket specifics that is appropriate for the tasks they are performing.

4.3. The role of CABs

The CAB shall be responsible for the inspection of IOs and their respective IO employees and for issuing approval and authorisation inspection certificates in accordance with this Appendix, and for revoking such certificates.

4.3.1. Responsibilities and requirements

(a) CABs shall keep the data submitted for the approval of an IO;

(b) CABs shall establish a secure communication channel with the TC and provide the inspection results to the TC in order to issue the security token with a digital certificate;

(c) CABs shall notify IO employees 6 months before their authorisation expires;

(d) CABs shall maintain a database containing data submitted for the authorisation of IO employees;

(e) CABs that refuse to approve an IO or authorise an IO employee shall communicate the inspection results concerning that IO or that employee to the TC;

(f) CABs shall only collect and use data required for the approval or authorisation process;

(g) CABs shall keep all data relating to IO and IO employees confidential and shall ensure that only authorised employees have access to such data;

(h) CABs shall provide once a year statistics on the number of approval and authorisations issued and also on the number of refusals to SERMI and the Commission;

(i) CABs shall retain secure records of approval and authorisation inspections for a period of 5 years;

(j) CABs shall inform all other CABs in the Member State in which it is established about negative inspection results of an IO;

(k) IOs and IO employees that have received a negative inspection result may provide the CAB with additional information correcting minor deficiencies within 15 working days from receiving the negative inspection result. CABs shall accordingly determine whether the inspection result is to be changed;

(l) CABs shall notify IOs 6 months before their approval expires;

(m) CABs shall make random und unannounced on-site inspections of IOs within the 60 months approval validity period, and subject each approved IO to at least one random, on-site inspection over the 60 months approval validity period;

▼M2

(n) On the basis of a complaint against an approved IO or an authorised IO employee, CABs shall check that the concerned IO or IO employee are in compliance with the criteria against which they were respectively approved or authorised. The CAB shall determine during its investigation whether an on-site inspection is required;

(o) For the purposes of on-site inspections, CABs may request the assistance of market surveillance authorities from the Member State they are established;

(p) CABs shall revoke IO approvals and IO employee authorisations where they no longer comply with the criteria against which they were respectively approved or authorised. CABs shall accordingly request the TC to suspend and repeal digital certificate of the concerned IO employees.

4.3.2. Renewal of the approval

CABs shall, upon request by an IO or 6 months prior to the expiry of validity of the approval, make an on-site inspection, and in case of a positive inspection result, renew the approval.

CABs shall issue a new approval inspection certificate for IO that fulfils the approval criteria.

CABs shall assess applications for renewals of authorisations and issue an authorisation inspection certificate to IO employees fulfilling the authorisation criteria.

4.3.3. Criteria for IO approval by the CAB

Before approving an IO and during any on-site inspection during the approval validity period, CABs shall check the following:

(a) documented ownership of IO, name of managing director;

(b) the list provided by the IO of employees to be authorised;

(c) information about the responsibility and the function of employees referred to in point (a);

(d) whether the IO has a liability insurance with a minimum amount of coverage of 1 million Euro for bodily injury and 0,5 million Euro for property damage;

(e) whether the approval of the IO has been revoked for reasons of misuse;

(f) whether the IO has provided proof of activity in the automotive area;

(g) whether the declaration certifying that the IO pursues a legitimate business activity as referred to in point 6.3 has been signed by the IO and during an on-site inspection whether the IO effectively conducts a legitimate business activity;

(h) whether the IO or the IO employees have a clean criminal record;

(i) whether there is declaration signed by the IO legal representative that compliance with the procedural requirements laid down in point 4.3.4 is ensured for all operations related to vehicle security.

4.3.4. Criteria for IO employee authorisation by the CAB

Before authorising an employee as an IO employee, and during any on-site inspection during the approval validity period, CABs shall verify the following:

(a) that the employee concerned did not have a previous authorisation which has been revoked because of misuse of that authorisation;

▼M2

(b) that the employee has a clean criminal record;

(c) that there is an employment agreement between the employee concerned and an approved IO;

(d) that the employee concerned has a valid country specific identity card or an equivalent document.

4.4. Role of the IOs

4.4.1. Responsibilities and requirements

(a) IOs shall request an inspection from their CAB to obtain approval;

(b) IOs shall inform their CAB about changes in their contact details;

(c) IOs shall inform their CAB when their business is dissolved;

(d) IOs shall record every security related RMI transaction and operation;

(e) IOs shall inform their CAB of any termination of employment of any of their authorised employees;

(f) IOs shall report to the relevant authorities any offence or misconduct that has been committed by their authorised employees and that concerns security related RMI;

(g) IOs shall ensure that their authorised employees only use their own authorisation inspection certificates;

(h) IOs shall ensure that all fees relating to their IO employee's authorisation have been paid;

(i) IOs shall ensure that their IO employees are trained for repair activities concerning automotive maintenance, reprogramming and security and safety functions;

(j) IO shall request their CAB for an on-site inspection in the six months prior to the expiration of their approval inspection certificate.

▼M9

4.4.2. RSS shall be subject to the responsibilities and requirements laid down in point 4.4.1.

▼M2

4.5. Role of IO employees

4.5.1. Responsibilities and requirements

(a) IO employees shall request their CAB for authorisation;

(b) IO employees shall register themselves on the vehicle manufacturer's RMI system;

(c) IO employees shall access security-related RMI in accordance with EN ISO standard 18541 – 2014;

(d) IO employees shall ensure that all records of security related RMI downloaded from the vehicle manufacturer RMI system shall not be stored any longer than necessary for performing the operation for which the information is needed;

(e) where applicable, IO employees shall notify their IO employer that their digital certificate is no longer required;

(f) IO employee shall not share with any third party the security token, the digital certificate or the PIN;

▼M2

(g) IO employees shall be responsible for using the personal security token and PIN correctly;

(h) IO employees shall inform their IO and their TC about any loss or misuse of their security token within 24 hours of such loss or misuse;

(i) IO employees shall report to the relevant authorities any request or act from other IO employees relating to security-related RMI that does not constitute a legitimate business activity as referred to in point 6.3 of this Annex.

▼M9

4.5.2. RSS employee shall be subject to the responsibilities and requirements laid down in point 4.5.1.

▼M2

4.6. Role of the trust centre

TCs shall create and send the digital certificates to the IOs via the respective CABs to the IOs and the IO employees. TCs shall maintain a database of issued authorisation inspection certificates. TCs shall provide vehicle manufacturers access to an interface to verify the status of the digital certificates and the authorisation inspection certificates.

TCs shall keep the information regarding IO employees in the authorisation database for an additional period of maximum 60 months. That period shall not be longer than the remaining validity period of the approval granted to the IO where the IO employee is working.

4.6.1. Responsibilities and requirements

(a) TCs can suspend and repeal digital certificates upon request from the CAB;

(b) TCs shall provide the software to use the digital certificates to the IO and IO employees;

(c) TCs shall operate 24 hours a day, 7 days a week.

4.7. Role of vehicle manufacturers

Vehicle manufacturers shall provide to all approved IOs and authorised IO employees access to security-related repair and maintenance information. Vehicle manufacturers shall communicate with TCs to verify the authorisation and authentication status of IO employees seeking access to such information.

4.7.1. Responsibilities and requirements

(a) vehicle manufacturers shall ensure that their websites are adapted to support the access of IOs to security-related RMI;

(b) vehicle manufacturers shall ensure that they download the technical specifications made available on the SERMI website.

4.7.2. Procedural requirements for vehicle manufacturers

Vehicle manufacturers shall not grant access to security-related RMI, unless all of the following procedural requirements have been complied with:

(1) Procedural requirements for stolen vehicles

Vehicle manufacturers shall keep a record of all vehicles of its brand reported by the authorities as stolen.

Vehicle manufacturers shall put in place a process that provides clear traceability and accountability and enables the relevant authorities to trace the data supplied by the vehicle manufacturer to the IO employee who was granted access to the information related to the stolen vehicle.

▼**M2**

(2) Procedural requirements for storing information

Vehicle manufacturers shall store the following information for each access granted to security-related repair and maintenance information:

(a) the Vehicle Identification Number (VIN) of the vehicle for which the information was requested;

(b) the date the request was made;

(c) the vehicle registration number of the vehicle for which the information was requested, where available;

(d) type variant of the vehicle for which the information was requested and the version of that vehicle, where available.

Vehicle manufacturers shall store those data for 5 years.

▼M9

Appendix 4

Conditions and procedure to access vehicle OBD information

1. Scope

1.1. This Appendix contains the conditions for access that the manufacturer shall only be allowed to set out and procedures that the vehicle manufacturer shall apply or shall only be allowed to require other parties to apply, while implementing the security measures for access to OBD information referred to in points 2.9.(a) and (b) of this Annex.

1.2. Any reference in this Appendix to independent operators or to manufacturer's authorised partners, dealers and repairers, as well as to a vehicle manufacturer acting for repair and maintenance purposes in this Appendix shall include any person or operator acting on their behalf, such as a service provider performing remotely, as a service provided to the independent operator, the programming, fitting or activating of parts and equipment on a vehicle (remote service suppliers).

2. Obligations of the manufacturer

2.1. The vehicle manufacturer shall be responsible for ensuring that all technical prerequisites for the application of the procedures referred to in this Appendix are in place, including access credentials such as certificates or software tokens and necessary arrangements with diagnostic tool manufacturers.

2.2. The vehicle manufacturer shall demonstrate to the approval authority that the vehicle is designed to enable access to OBD information, in compliance with the requirements of this Appendix, using multi-brand diagnostic tools.

2.3. The vehicle manufacturer shall provide to the manufacturers of diagnostic tools the information referred to in point 11 of this Appendix.

2.4. The vehicle manufacturer shall ensure that its server used for the purpose of enabling access under point 2.9 of this Annex offers to independent operators, on a non-discriminatory basis, the same availability and performance of the information system as it offers to the vehicle manufacturer's authorised partners, dealers and repairers or to the vehicle manufacturer using it for this purpose.

Vehicle manufacturer shall ensure that any server used for the purpose of enabling access under point 2.9 of this Annex is accessible without interruption, except for exceptional and unforeseeable circumstances outside the vehicle manufacturer's control and not attributable to negligence on its part, or as required for maintenance purposes of the information system. In case of maintenance, the period of unavailability shall not exceed the period of maintenance of any other server used by the manufacturer to enable access for the purposes referred to in point 2.9 of this Annex. The information of the planned maintenance shall be made available to the manufacturers of diagnostic tools sufficiently in advance.

The vehicle manufacturer shall make yearly server availability statistics information available to the approval authority upon request. Cases of server unavailability shall be promptly reported by the vehicle manufacturer to the OBD Forum defined in point 12.

▼M9

2.5. The vehicle manufacturer shall not restrict access to OBD information beyond the restrictions laid down in this Appendix unless specifically provided otherwise in this Regulation. Furthermore, the vehicle manufacturer shall not restrict access by independent operators to OBD information beyond the restrictions applicable to its authorised partners, dealers and repairers or to the vehicle manufacturer accessing the OBD information for repair and maintenance purposes.

2.6. The Vehicle manufacturer shall ensure that the cybersecurity measures they implement, including the compatibility requirements referred to in point 6.2, do not result in restricting or obstructing access to OBD information under this Appendix beyond what is necessary and proportionate to comply with Article 4.5(d) and Annex II line D4 of Regulation (EU) 2019/2144. Such measures may address future risks and threats where the vehicle manufacturer can demonstrate their impact and probability.

2.7. Any measures implemented by vehicle manufacturer to prevent emissions tampering and the odometer fraud shall not restrict or obstruct access to the OBD information beyond what is necessary and proportionate to comply with Articles 4(7) and 4(8) of Regulation (EU) 2024/1257 of the European Parliament and of the Council ([1]).

3. Authentication

3.1. The vehicle manufacturer may, as a condition for issuing the access credentials, require authentication of the diagnostic tool manufacturer and the diagnostic tool used, except for the following repair and maintenance operations:

(a) reading diagnostic trouble codes;

(b) reading the vehicle VIN;

(c) reading data and clearing diagnostic trouble codes where unrestricted access by means of a generic or OBD scan-tool is either required under Regulation (EU) 2017/1151 or Regulation (EU) 2024/1257; or provided for in UN Regulation No 49, UN Regulation No 83 ([2]), UN Regulation No 168 ([3]) or UN Regulation No 154.

([1]) Regulation (EU) 2024/1257 of the European Parliament and of the Council of 24 April 2024 on type-approval of motor vehicles and engines and of systems, components and separate technical units intended for such vehicles, with respect to their emissions and battery durability (Euro 7), amending Regulation (EU) 2018/858 of the European Parliament and of the Council and repealing Regulations (EC) No 715/2007 and (EC) No 595/2009 of the European Parliament and of the Council, Commission Regulation (EU) No 582/2011, Commission Regulation (EU) 2017/1151, Commission Regulation (EU) 2017/2400 and Commission Implementing Regulation (EU) 2022/1362 (OJ L, 2024/1257, 8.5.2024, ELI: http://data.europa.eu/eli/reg/2024/1257/oj).

([2]) Regulation No 83 of the Economic Commission for Europe of the United Nations (UN/ECE) – Uniform provisions concerning the approval of vehicles with regard to the emission of pollutants according to engine fuel requirements (OJ L 42, 15.2.2012, p. 1, ELI: http://data.europa.eu/eli/reg/2012/83/oj).

([3]) Regulation No 168 of the Economic Commission for Europe of the United Nations (UN/ECE) – Uniform provisions concerning the approval of light duty passenger and commercial vehicles with regards to real driving emissions (RDE) [2024/211] (OJ L, 2024/211, 12.1.2024, ELI: http://data.europa.eu/eli/reg/2024/211/oj).

▼M9

3.2. Whenever access to OBD information involves changes to the vehicle, the vehicle manufacturer may, as a condition for issuing the access credentials, require authentication of the operator. In the case of devices used for monitoring purposes, where data is only read and autonomously reported to the diagnostic tool manufacturers server without any human interaction, the vehicle manufacturer shall not require authentication of the operator.

3.3. Where access to OBD information involves a change of the vehicle software or its configuration/its parameters consisting in reprogramming of the vehicle software code, resulting in alteration of the intended behaviour of the vehicle and persisting beyond the repair and maintenance operation, so that it can only be reversed or overwritten by the performance of an equivalent operation, the vehicle manufacturer may require authentication of the employee of the operator who is seeking to access OBD information, unless the manufacturer of the diagnostic tool attests to the vehicle manufacturer that, based on the result of an independent audit performed no earlier than 3 years before the request, the operator has a system in place allowing for unambiguous identification of the employee seeking such access.

3.4. Cases of access referred to in point 3.2 shall include such repair and maintenance operations as activation of actuators and functional test routines, clearing of diagnostic trouble codes, resetting of service lights, resetting of adaptive learning parameters, and replacement of parts including initialisation of non-smart component and reading data by identifier, except where it is used for the purposes of Periodic Technical Inspection with values comparable to the values defined in ISO20730-3, Annex B, provided that these values are available in the vehicle.

3.5. Cases of access referred to in point 3.2 shall include calibration, understood as a process of adjusting or aligning vehicle software and hardware parameters as prescribed by the vehicle manufacturer and without variant coding or modifying the vehicle software.

3.6. For the purposes of authentication referred to in points 3.1 to 3.3, the manufacturer of the tool used to access the OBD information may be required by the vehicle manufacturer to attest to the vehicle manufacturer the following:

(a) the identity of the diagnostic tool;

(b) where access to OBD information involves changes to the vehicle referred to in point 3.2, the identity of the diagnostic tool and pseudonymized identity of the operator and the compliance of the operator with the authorization requirements referred to in point 8.1;

(c) where access to OBD information involves a change of the vehicle software or its configuration/its parameters consisting in reprogramming of the vehicle software code, resulting in alteration of the intended behaviour of the vehicle and persisting beyond the repair and maintenance operation, so that it can only be reversed or overwritten by the performance of an equivalent operation, as referred to point 3.3, the pseudonymised identity of the operator's employee and the compliance of this employee with the authorisation requirements referred to in point 8.2.

▼M9

3.7. In cases referred to in point 3.6, points (b) and (c), the identity of the operator and, where relevant, the employee of the operator and their compliance with the authorization requirements referred to in points 8.1 and 8.2 shall be verified by the manufacturer of the diagnostic tool used to access the OBD information or established based on an authorization certificate referred to in point 9.2.

3.8. No fees shall be required by the vehicle manufacturer for enabling access under point 2.9 of Annex X. However, vehicle manufacturer may charge justified and proportionate fees for the use of the remote facility referred to in point 2.9, point (c).

4. Connection requirements

4.1. Except for cases of access referred to point 3.1, points (a) to (c), the vehicle manufacturer may require one-time online connection from the diagnostic tool through diagnostic tool manufacturer's server to vehicle manufacturer's server to receive credentials. After the provision of access credentials, access shall not require online connection.

4.2. Whenever access to OBD information involves a change of the vehicle software or its configuration or its parameters resulting in alteration of the intended behaviour of the vehicle that persists beyond the repair and maintenance operation and that can only be reversed or overwritten by the performance of an equivalent operation, the vehicle manufacturer may require a continuous online connection at the time of performing the repair from the diagnostic tool to diagnostic tool manufacturer's server as well as from the diagnostic tool manufacturer to the vehicle manufacturer server.

4.3. Cases of access referred to in point 4.2 shall include the following;

(a) repair and maintenance operations as setting up a replacement component and customer preferences, identifying an Electronic Control Unit (ECU) and variant coding, initialising an ECU and a component, variant coding when replacing existing components, and variant coding when adding a new component;

(b) repair and maintenance operations referred to in point 5.5.

4.4. Cases of access referred to in in point 4.2 shall not include repair and maintenance operations enumerated in points 3.4 and 3.5.

4.5. However, by way of derogation from the point 4.4., cases of access referred to in point 4.2 include repair and maintenance operations referred to in point 3.5 where it is necessary to validate calibration values which are subject to regulatory requirements or where calibration cannot be completed without individual component or separate technical unit specific data necessary to complete the repair process and retrieved from the manufacturer's server as part of a variant coding process.

5. Traceability requirements

5.1. Except for cases of access referred to in points (a) to (c) of point 3.1, the vehicle manufacturer may require the diagnostic tool manufacturer to collect and store the vehicle VIN and the unique diagnostic tool identifier.

▼M9

5.2. Whenever access to OBD information involves changes to the vehicle, the vehicle manufacturer may require the diagnostic tool manufacturer to collect and store information on all executed diagnostic jobs (e.g. service-ID and sub-function) and used parameters/attributes UTC date and time stamps for each interaction with the vehicle.

5.3. Cases of access referred to in point 5.2 shall include such repair and maintenance operations as those referred to in points 3.4, 3.5, 4.3 and 4.5.

5.4. Whenever access to OBD information involves a change of the vehicle software or its configuration/its parameters consisting in reprogramming of the vehicle software code, resulting in alteration of the intended behaviour of the vehicle and persisting beyond the repair and maintenance operation, so that it can only be reversed or overwritten by the performance of an equivalent operation, the vehicle manufacturer may require the diagnostic tool manufacturer to collect and provide the results of the vehicle network topology inspection, initial vehicle state upon connection, including hardware/software versions of all electronic control units installed in the vehicle, results of all module interaction and routines run (e.g. return parameters) and results of the post-repair final vehicle health check readout.

5.5. Cases of access referred to in point 5.4 shall include such repair and maintenance operations as pairing an original replacement part (including software and hardware compatible (as defined by the vehicle manufacturer) remanufactured or re-used part) or a vehicle manufacturer authorized replacement part to a vehicle by using an independent diagnostic tool and reprogramming a module by using original equipment vehicle software and original equipment programming software in accordance with the vehicle manufacturer's instructions. It shall also include cases of decoupling or deregistering a part from a vehicle.

5.6. Cases of access referred to in in point 5.4 shall not include repair and maintenance operations enumerated in points 3.4, 3.5, 4.3 and 4.5.

6. Cybersecurity requirements applicable to diagnostic tool

6.1. Except for cases of access referred to in points (a) to (c) of point 3.1, the vehicle manufacturer may require that the diagnostic tool used to access the OBD information comply with the relevant requirements of Regulation (EU) 2024/2847 of the European Parliament and of the Council ([1]) and that the diagnostic tool manufacturer comply with either Trusted Information Security Assessment Exchange (TISAX), to the level specified by the vehicle manufacturer in compliance with point 2.5, or ISO 27001.

([1]) Regulation (EU) 2024/2847 of the European Parliament and of the Council of 23 October 2024 on horizontal cybersecurity requirements for products with digital elements and amending Regulations (EU) No 168/2013 and (EU) 2019/1020 and Directive (EU) 2020/1828 (Cyber Resilience Act) (OJ L, 2024/2847, 20.11.2024, ELI: http://data.europa.eu/eli/reg/2024/2847/oj).

▼M9

6.2. Whenever access to OBD information involves changes to the vehicle referred to in point 3.2, the vehicle manufacturer may require that the diagnostic tool used to access the OBD information and the diagnostic tool manufacturer comply with the requirements of the vehicle manufacturer's security implementation.

6.3. The requirements of the vehicle manufacturer's security implementation shall not exceed the requirements imposed on vehicle manufacturer's own diagnostic tool, tool suppliers and own organisation and shall be applied on a non-discriminatory basis.

6.4. The vehicle manufacturer may require the diagnostic tool manufacturer to perform tests to verify the compliance of the diagnostic tool with the specified requirements. A Service Level Agreement shall ensure that any verification of the results of these tests performed by the vehicle manufacturer is done in a timely manner. In case a diagnostic tool manufacturer's compliance with the requirements of this section is not confirmed, a clear statement of the reasons for non-compliance shall be provided by the vehicle manufacturer, together with the required measures to be implemented by the diagnostic tool manufacturer.

6.5. Cases of access referred to in point 6.2 shall include such repair and maintenance operations as those referred to in points 3.4 and 3.5.

6.6. Whenever access to OBD information involves change of the vehicle software or its configuration/its parameters resulting in alteration of the intended behaviour of the vehicle persisting beyond the repair and maintenance operation, so that it can only be reversed or overwritten by the performance of an equivalent operation, the vehicle manufacturer may require that the diagnostic tool used to access the OBD information and the diagnostic tool manufacturer comply with the relevant requirements of the vehicle manufacturer's Software Updates Management System (as defined in UN Regulation No 156 ([1]) implementation. Those requirements shall not exceed the requirements imposed on the vehicle manufacturer's own diagnostic tool, tool suppliers and own organisation and shall be applied on a non-discriminatory basis.

6.7. Cases of access referred to in point 6.6 shall include such repair and maintenance operations as those referred to in points 4.3, 4.5 and 5.5 and shall not include those referred to in points 3.4 and 3.5.

7. Access credentials

7.1. Where all the conditions referred to in sections 3, 4 and 6 are complied with, the vehicle manufacturer shall, without delay, provide the diagnostic tool manufacturer with access credentials sufficient to enable the access to the required OBD information.

7.2. Access credentials may be VIN-specific.

7.3. Access credentials shall be valid for at least 30 days from the time of provision.

7.4. However, whenever access to OBD information involves a change to the vehicle, the vehicle manufacturer may limit the validity of access credentials to 24 hours.

([1]) Regulation No 156 of the Economic Commission for Europe of the United Nations (UN/ECE) – Uniform provisions concerning the approval of vehicles with regards to software update and software updates management system [2021/388] (OJ L 82, 9.3.2021, p. 60, ELI: http://data.europa.eu/eli/reg/2021/388/oj).

▼M9

7.5. Cases of access referred to in point 7.4 shall include such repair and maintenance operations as those referred to in points 3.4, 3.5, 4.3, 4.5 and 5.5.

8. Authorisation criteria and authorization certificates

8.1. In cases referred to in point 3.2, the vehicle manufacturer may refuse to issue access credentials if the manufacturer of the diagnostic tool used to access the OBD information does not attest that the operator seeking access to OBD information:

(a) has a valid liability insurance with a minimum amount of coverage of EUR 1 million for bodily injury and EUR 0,5 million for property damage;

(b) pursues a legitimate business activity in the automotive sector as referred to in point 6.3 of this Annex.

No other conditions for issuing access credentials shall be imposed by the vehicle manufacturer than those specified in points(a) and (b).

8.2. In cases referred to in point 5.4, where the vehicle manufacturer requires the authentication of the employee of the operator and unless the manufacturer of the diagnostic tool attests to the vehicle manufacturer, in compliance with the conditions set out in point 3.3, that the operator has a system in place allowing for unambiguous identification of the employee seeking such access, the vehicle manufacturer may refuse to issue access credentials if the manufacturer of the diagnostic tool used to access the OBD information does not attest, in addition to the conditions referred to in point 8.1, that the employee seeking access to OBD information holds an employment agreement with the operator seeking access to OBD information and that the employee concerned has a valid country specific identity card or an equivalent document.

8.3. To be eligible for the authentication procedure under this Appendix, the diagnostic tool manufacturer shall have committed in the general conditions of contracts with operators to accept on request by the independent operator, for the purpose of attesting the compliance with the requirements referred to in points 8.1 and 8.2, a certificate referred to in point 9.2 of this Appendix and issued not earlier than 60 months before the request for access. However, where the operator does not request to be authenticated based on such a certificate, the diagnostic tool manufacturer may, for the purpose of authentication, choose to verify the identity of the operator or the operator's employee and the compliance with the authorization criteria by its own processes.

9. Conformity Assessment Body and Trust Centre

9.1. Certificates referred to in points 3.7 and 8.3 shall be issued by a Trust Centre referred to in point 2.1.6 of Appendix 3 based on the findings of a conformity assessment body as referred to in point 4.2.2 of Appendix 3 with regard to the circumstances referred to in point 9.2.

9.2. For the purpose of issuing the authorization certificates by a Trust Centre, the Conformity Assessment Body shall:

(a) comply with the requirements referred to under points (a), (b), (d), (e), (f), (g), (h), (i), (k), (l), (n), and (p) of point 4.3.1 of Appendix 3 of Annex X;

▼M9

(b) inspect and confirm the circumstances referred to under (d) and (g) of point 4.3.3 of Appendix 3 of Annex X. In cases referred to in point 5.4, where the vehicle manufacturer requires the authentication of the employee of the operator, the inspection and confirmation of those circumstances shall refer to the employee of the operator.

9.3. For the purpose of issuing authorisation certificates in cases referred to in point 9.1, Trust Centre shall:

(a) comply with the requirements of point 4.6 of Appendix 3;

(b) provide all required information to the diagnostic tool manufacturer to implement the certificates into their diagnostic tools.

10. Vehicle manufacturer's access to information concerning the operator

10.1. The vehicle manufacturer shall obtain, on request, from the manufacturer of the diagnostic tool access to the information regarding an individual repair or maintenance operation recorded in accordance with section 5 only where this is necessary in relation to repair or maintenance work carried out on an individual vehicle to:

(a) react to a reasonable suspicion of serious misuse of access to the vehicle;

(b) carry out investigations in case of product liability or warranty claims;

(c) investigate cybersecurity or illegal tampering incidents, answer queries of the vehicle owner or a public authority.

In cases referred to in points (b) and (c), this information shall include, where applicable, the information regarding the operator and/or its employees. In cases where the manufacturer of the diagnostic tool relied for the authentication on a certificate provided by the Trust Centre, the relevant CAB shall provide the required information based on its assessment of a documented request by the vehicle manufacturer.

The vehicle manufacturer shall ensure that the information regarding an individual repair or maintenance operation accessed for the purposes referred to in points (a) to (c) shall not be used for any other purpose.

10.2. In cases referred to in point 10.1, the manufacturer of the diagnostic tool shall inform, without delay, the independent operator and, where relevant, the employee of the independent operator, about the access to the information regarding an individual repair or maintenance operation or to the information concerning the operator and/or its employees.

10.3. In cases referred to in points (a) and (c) of point 10.1 and where this is necessary and proportionate to prevent further misuse or address cybersecurity risk, the vehicle manufacturer may temporarily suspend or restrict access of the diagnostic tool concerned or request the involved manufacturer of the diagnostic tool to take immediate measures to temporarily restrict the access of the concerned operator, diagnostic tool, or employee to the OBD information concerning the vehicles of this manufacturer.

▼M9

10.4. In exceptional cases, in response to a significant present or imminent cybersecurity incident a Vehicle Manufacturer may suspend access to the OBD information, at the most granular level possible, where it is necessary and proportionate to respond to the incident concerned.

10.5. In cases referred to in points 10.3 and 10.4, the vehicle manufacturer shall, at the same time, notify the suspension to the Approval Authority, together with the reasons for the suspension and all relevant evidence. The suspension shall be lifted when the incident is settled or if the Approval Authority requests the vehicle manufacturer to do so.

The Approval Authority shall, within 10 days from the day of the notification, review the grounds for suspension and, if the suspension is manifestly unjustified or disproportionate, request the vehicle manufacturer or the involved manufacturer of the diagnostic tool to restore access.

The Approval Authority may, at any time, request the vehicle manufacturer and the involved manufacturer of the diagnostic tool to restore access where it considers that the grounds for suspension ceased to exist.

11. Information to be provided to diagnostic tool manufacturers

11.1. The vehicle manufacturer's RMI system shall display contact data and process-related information on how to obtain the requested information, as specified in points (a), (b), (c) and (d), concerning integration of diagnostic tool, at the time of the type-approval:

(a) contact information for technical and commercial enquiries;

(b) description of the integration process including indicative timeline;

(c) general terms and conditions for integration of diagnostic tools by the diagnostic tool manufacturer;

(d) schedule of fees for integration related services.

11.2. Subject to the conclusion of a non-disclosure agreement, the vehicle manufacturer shall make available, on request, the following information to any independent operator complying with TISAX, to the level specified by the vehicle manufacturer in compliance with point 2.5, or ISO 27001:

(a) for reference, a model agreement on security integration, clearly indicating the terms intended to be included in all the vehicle manufacturer's agreements with diagnostic tool manufacturers on this matter,

(b) description of the requirements and processes for secure integration of the diagnostic tool including the indicative timeline.

11.3. The vehicle manufacturer shall provide the following information and make available the following services to the manufacturer of diagnostic tool, at the time of the conclusion of an agreement on the integration of diagnostic tool:

(a) detailed and timely updated requirements, processes and technical specifications for secure integration of the diagnostic tool, including the security implementation requirements;

▼M9

(b) against reasonable remuneration, as referred to in point 2.3, instant response technical support for security integration and diagnostic tool verification.

11.4. The security implementation requirements referred to in point 11.3 shall be accompanied by the explanation of the reasons for this requirement. In exceptional cases the vehicle manufacturer may provide only the necessary requirements without detailed explanations where:

(a) disclosing the specific objectives behind a requirement could compromise proprietary information or trade-secrets, or

(b) the disclosure of the reasoning would reveal a broader cybersecurity strategy that must remain confidential to maintain the integrity of the system.

11.5. The information referred to in points 11.1 to 11.3 shall be provided together with the application for a type approval.

12. OBD Forum

12.1. The Forum on Access to Vehicle Information (OBD-Forum) shall be in charge for coordinating and monitoring the implementation of the procedures for:

(a) authentication and authorisation of independent operators as described in point 3 and 8 of this Appendix, including the processes used by the manufacturers of diagnostic tools for verification of authorisation criteria, as described in point 3 of this Appendix;

(b) issuing access credentials as described in point 7 of this Appendix including the fulfilment of traceability and connectivity requirements;

(c) disclosing the information on access and suspension or restriction of access as described in point 10 of this Appendix.

12.2. The Forum shall:

(a) advise the Commission on implementation of this Appendix;

(b) advise the approval authorities on disputes concerning the interpretation and implementation of this Appendix;

(c) advise the vehicle manufacturers, diagnostic tools manufacturers and independent operators on:

(i) interpretation of the Appendix;

(ii) practical aspects of the procedures referred to in points 12.1;

(iii) guidance on resolving disputes concerning the implementation of the procedures referred to in point 12.1.

12.3. The members of the OBD-Forum shall be represented by vehicle manufacturers and independent operators engaged in the implementation and use of procedures and processes described in paragraph 12.1.

12.4. The OBD Forum shall operate under the common legal and organizational structure as the ‘Forum for Access to Security-Related Vehicle RMI. referred to in paragraph 2.1.12 of Appendix 3.

▼B

ANNEX XI

CORRELATION TABLE

1. Regulation (EC) No 715/2007

Regulation (EC) No 715/2007	This Regulation
Article 1(2)	Article 86(1), point (2)
Article 3, points (14) and (15)	Article 3, points (48) and (45)
Article 6	Article 61
Article 7	Article 63
Article 8	—
Article 9	—
Article 13(2), point (e)	Article 86(1), point (5)

2. Regulation (EC) No 595/2009

Regulation (EC) No 595/2009	This Regulation
Article 1, second paragraph	Article 87(1), point 2
Article 3, points (11) and (13)	Article 3, points (48) and (45)
Article 6	Article 61
Article 11(2), point (e)	Article 84(3), point (a)

3. Directive 2007/46/EC

Directive 2007/46/EC	This Regulation
Article 1	Article 1(1)
—	Article 1(2)
Article 2	Article 2
Article 3, point (1)	—
Article 3, point (2)	—
Article 3, point (3)	Article 3, point (1)
Article 3, point (4)	Article 3, point (3)
Article 3, point (5)	Article 3, point (2)
Article 3, point (6)	Article 3, point (6)
Article 3, point (7)	Article 3, point (8)
Article 3, point (8)	Article 3, point (9)
Article 3, point (9)	Article 3, point (10)
Article 3, point (10)	Article 3, point (11)

▼B

Directive 2007/46/EC	This Regulation
Article 3, point (11)	Article 3, point (16)
Article 3, point (12)	Article 3, point (17)
Article 3, point (13)	Article 3, point (15)
Article 3, point (14)	—
Article 3, point (15)	—
Article 3, point (16)	—
Article 3, point (17)	Article 3, point (32)
Article 3, point (18)	Article 3, point (24)
Article 3, point (19)	Article 3, point (25)
Article 3, point (20)	Article 3, point (26)
Article 3, point (21)	Article 3, point (27)
Article 3, point (22)	Article 3, point (28)
Article 3, point (23)	Article 3, point (18)
Article 3, point (24)	Article 3, point (19)
Article 3, point (25)	Article 3, point (20)
Article 3, point (26)	—
Article 3, point (27)	Article 3, point (40)
Article 3, point (28)	Article 3, point (41)
Article 3, point (29)	Article 3, point (36)
Article 3, point (30)	—
Article 3, point (31)	Article 3, point (38)
Article 3, point (32)	Article 3, point (54)
Article 3, point (33)	Article 3, point (4)
Article 3, point (34)	—
Article 3, point (35)	—
Article 3, point (36)	Article 3, point (5)
Article 3, points (37) to (40)	—
—	Article 3, point (7)
—	Article 3, points (12), (13) and (14))
—	Article 3, points (21), (22) and (23)
—	Article 3, points (29), (30), (31), (33), (34) and (35)

▼B

Directive 2007/46/EC	This Regulation
—	Article 3, point (37)
—	Article 3, point (39)
—	Article 3, points (42) to (53)
—	Article 3, points (55) to (58)
—	Article 5(2) and (3)
—	Article 6(1), third subparagraph, (2) and (3)
—	Article 7(2), (3) and (4)
Article 4(1)	—
Article 4(2)	Article 7(1)
Article 4(3), first subparagraph	Article 6(4)
Article 4(3), second subparagraph	Article 6(5), first subparagraph
Article 4(4)	Article 6(1), first and second subparagraphs
—	Article 6(5), second subparagraph and (6) to (10)
—	Article 8
—	Article 9
—	Article 10
—	Article 11
—	Article 12
Article 5(1)	Article 13(1) and (2), first subparagraph
Article 5(2), first subparagraph	Article 13(2), second subparagraph
Article 5(2), second subparagraph	Article 13(3)
Article 5(3)	Article 13(4), first sentence
—	Article 13(4), second sentence and (5) to (10)
—	Article 14
—	Article 15
—	Article 16
—	Article 17
—	Article 18

▼B

Directive 2007/46/EC	This Regulation
—	Article 19
—	Article 20
—	Article 21
Article 6(1)	Article 22(1)
—	Article 22(2) and (4)
Article 6(2)	Article 25(1)
Article 6(3)	—
Article 6(4)	Article 25(2)
Article 6(5)	Article 22(5) and (6), and Article 25 (3)
Article 6(6) and Article 7(1)	Article 23
Article 6(7) and Article 7(3)	Article 25(4)
Article 6(8) and Article 7(4)	Article 30(4)
Article 7(2)	Article 24
Article 8(1) and (2)	Article 26(1) and (3)
—	Article 26(2) and (4)
Article 8(3)	Article 26(5)
Article 8(4)	Article 28(2)
Article 8(5) to (8)	Article 27(1) and (2)
—	Article 27(3)
Article 9(1)	Article 5(1)
Article 9(2)	Article 22(3)
—	Article 28(1) and (3)
Article 9(3)	Article 28(4)
Article 9(4)	Article 28(5)
Article 9(5)	—
Article 9(6) and (7)	Article 28(6) and (7)
Article 10(1) and (2)	Article 29(1)
Article 10(3)	Article 29(2)
Article 10(4)	Article 29(3)

▼B

Directive 2007/46/EC	This Regulation
Article 11	Article 30(1), (2) and (5) to (8)
Article 12(1)	Article 31(1)
—	Article 31(2)
Article 12(2), first subparagraph	Article 31(3)
Article 12(2), second subparagraph	Article 31(4)
—	Article 31(5), (6) and (8)
Article 12(3)	Article 31(7)
—	Article 32
Article 13(1)	Article 33(1)
Article 13(2)	Article 33(2)
Article 13(3)	Article 33(3) and (4)
—	Article 33(5)
Article 14(1) and Article 15(1)	Article 34(1)
Article 14(2) and Article 15(2)	Article 34(2)
Article 14(3) and Article 15(3)	Article 34(3)
Article 14(4)	Article 34(4)
Article 16(1) and (2)	Article 27(1)
Article 16(3)	Article 27(2)
Article 17(1) to (4)	Article 35(2) to (5)
Article 18(1) and (3)	Article 36(1) and (4)
—	Article 36(2)
Article 18(2)	Article 36(5)
—	Article 36(6) and (7)
Article 18(4)	Article 36(8) and (9)
Article 18(5) and (6)	Article 36(4)
Article 18(7)	Article 37(2)
Article 18(8)	Article 36(3)
—	Article 37(1) and (3) to (9)
—	Article 38(1)

▼B

Directive 2007/46/EC	This Regulation
Article 19(1) and (2)	Article 38(2)
Article 19(3)	Article 38(3)
Article 20(1)	Article 39(1)
Article 20 (2), introductory wording	Article 39(4)
Article 20 (2), points (a), (b) and (c)	Article 39(2)
Article 20(3)	Article 39(5)
Article 20(4), first subparagraph	Article 39(3)
Article 20(4), second subparagraph	Article 39(6)
Article 20(4), third subparagraph	Article 39(7)
Article 20 (5)	—
Article 21	Article 40
Article 22	Article 41
Article 23(1)	Article 42(1)
Article 23(2) and (3)	Article 42(2)
Article 23(4)	Article 42(3)
Article 23(5)	Article 42(4)
—	Article 42(5)
Article 23(6), first subparagraph	Article 43(1) and (2)
Article 23(6), second subparagraph	Article 43(3)
Article 23(6), third subparagraph	Article 43(4)
Article 23(7)	Article 43(5)
—	Article 44
Article 24	Articles 45 and 46
Article 25	Article 47
Article 26(1)	Article 48(1)
Article 26(2)	—
Article 26(3)	Article 48(2)
Article 27	Article 49

▼B

Directive 2007/46/EC	This Regulation
Article 28	Article 50
—	Article 51
Article 29(1), first subparagraph	Article 52(1) and (3)
—	Article 52(2)
—	Article 52(4)
Article 29(1), second subparagraph	Article 53(1) and (2)
—	Article 53(3) and (4)
Article 29(2)	Article 53(5), first subparagraph
—	Article 53(5), second subparagraph, (6) and (8)
Article 29(3)	Article 53(7)
Article 29(4)	—
Article 30(1)	Article 53(1)
Article 30(2), first subparagraph	Article 53(2)
Article 30(2), second subparagraph	—
Article 30(3)	Article 54(1)
Article 30(4)	Article 54(2), (3) and (4), first subparagraph
Article 30(5)	Article 54(4), second subparagraph
Article 30(6)	Article 54(5)
Article 31(1) to (4)	Article 55
Article 31(5), first subparagraph	Article 56(1)
Article 31(5), second and third subparagraphs	Article 56(2)
Article 31(6) and (7)	—
Article 31(8)	Article 56(3)
Article 31(9)	Article 56(4)
—	Article 56(5)

▼B

Directive 2007/46/EC	This Regulation
Article 31(10)	Article 56(6)
Article 31(11)	—
Article 31(12), first subparagraph	Article 56(7)
Article 31(12), second subparagraph	—
Article 31(13)	—
Article 32	Article 53
Article 33	—
Article 34(1)	Article 57(1)
Article 34(2)	Article 57(2)
Article 34(3) and (4)	—
Article 35	Article 58
Article 36	—
Article 37	Article 59
Article 38	Article 60
—	Article 62
—	Article 64
—	Article 65
—	Article 66
—	Article 67
Article 39	Article 82
Article 40	Article 83
Article 41(1) and (3)	Article 68(1)
Article 41(2)	Article 80(1)
Article 41(4)	Article 70
Article 41(5)	Article 68(2)
—	Article 69(3) and (4)
Article 41(6)	Article 72(1)
Article 41(7)	Article 72(2) and (3)
Article 41(8)	Article 68(5)
—	Article 69

▼B

Directive 2007/46/EC	This Regulation
—	Article 71
Article 42	Article 73
Article 43(1) and (3)	Article 74(1)
Article 43(2)	Article 74(2)
Article 43(4)	Article 75
Article 43(5)	Article 74(3)
—	Article 76
—	Article 77
—	Article 78
—	Article 79
—	Article 80(2) and (3)
—	Article 81
Article 44	Article 89
Article 45	Article 91
Article 46	Article 84
—	Article 85
Article 47	Article 90
Article 48	—
Article 49	Article 88
—	Article 86
—	Article 87
Article 50	Article 91
Article 51	—
Annexes I and III	Article 24(4)
Annex II, part A, points 1 to 1.3.4.	Article 4
Annex II, part A, points 2 to 6.2, part B, part C, Appendices 1 and 2	Annex I
Annex IV	Annex II, parts I and II
Annex V, Appendices 1 and 2	Annex III
Annex V, Appendix 3	Article 30(3)
Annexes VI, VII and VIII	Article 28(3)

▼B

Directive 2007/46/EC	This Regulation
Annex IX	Article 36(3)
Annex X	Annex IV
Annex XI	Annex IV, part III
Annex XII	Annex V
Annex XIII	Annex VI
Annex XIV	—
Annex XV	Annex VII
Annex XVI	Annex VIII
Annex XVII	Annex IX
—	Annex X
Annex XIX	—
Annex XX	—
Annex XXI	Annex XI