Regulation No 71 of the Economic Commission for Europe of the United Nations (UN/ECE) — Uniform provisions concerning the approval of agricultural tractors with regard to the driver's field of vision (*)

1. SCOPE

1.1. This Regulation applies to the 180° forward field of vision of the drivers of agricultural tractors.

2. DEFINITIONS

2.1. For the purposes of this Regulation 'agricultural tractor' means any power-driven vehicle, either wheeled or tracklaying, which has at least two axles, whose function depends essentially on its tractive power, and which is specially designed to pull, push, carry or actuate certain implements, machines or trailers intended for use in agriculture or forestry. Such a tractor may be arranged to carry a load and attendants;

2.2. 'Approval of a tractor' means the approval of a tractor type with regard to the field of vision defined in paragraph 2.4;

2.3. 'Tractor type' means a category of tractors which do not differ in such essential respects as:

2.3.1. such external and internal shapes and arrangements within the area specified in paragraph 1.1 as may affect visibility;

2.3.2. the form and size of the windscreen and of the side windows situated in the area specified in paragraph 1.1;

2.4. 'Field of vision' means the aggregate of forward and side directions in which the tractor driver can see;

2.5. 'Reference point' means the point which is situated in the plane parallel to the median longitudinal plane of the tractor passing through the middle of the seat, at a position 700 mm along the vertical above the line of intersection of that plane with the surface of the seat and 270 mm — in the direction of the pelvis support — from the vertical plane tangential to the front edge of the seat surface and perpendicular to the median longitudinal plane of the tractor (see figure 1); the reference point as thus determined applies to an empty seat adjusted in the average position prescribed by the tractor manufacturer;

2.6. 'Semi-circle of vision' means the semi-circle described by a radius of 12 m around the point situated in the horizontal plane of the road at the vertical below the reference point so that the arc — seen from the direction in which the vehicle travels — is situated in front of the tractor and that the diameter delimiting the semi-circle forms a right angle with the longitudinal axis of the tractor (see figure 2);

2.7. 'Masking effect' means the chords of the sectors of the semi-circle of vision which cannot be seen because of structural components — for instance, the roof pillars, air intakes, exhaust stacks, windscreen frames, protective frame;

2.8. 'Area of vision' means that part of the field of vision which is delimited:

2.8.1. in an upward direction by a horizontal plane passing through the reference point,

2.8.2. on the plane of the road by the area, situated outside the semi-circle of vision, which extends the area of the semi-circle of vision, whose chord, 9,5 m in length, is perpendicular to and bisected by the plane parallel to the median longitudinal plane of the tractor passing through the middle of the driver's seat;

(*) Publication in accordance with Article 4(5) of Council Decision 97/836/EC of 27 November 1997 (OJ L 346, 17.12.1997, p. 78).

2.9. 'Operating area of the windscreen wipers' means the external surface of the windscreen which is swept by the windscreen wipers.

3. APPLICATION FOR APPROVAL

3.1. The application for approval of a tractor with regard to the driver's field of vision shall be submitted by the manufacturer of the tractor or by his duly accredited representative.

3.2. It shall be accompanied by the under-mentioned documents in triplicate, and by the following particulars:

3.2.1. A description of the tractor with regard to the points mentioned in paragraph 2.3 above, together with dimensioned drawings and tyre sizes designated by the manufacturer and either a photograph or an exploded view of the passenger compartment; the numbers and/or symbols identifying the tractor type shall be specified;

3.2.2. Particulars of the position of the reference point in relation to any obstacles to the driver's vision, the particulars being sufficiently detailed for, *inter alia*, calculation of the masking effects according to the formula given in paragraph 5.2.2.2.

3.3. A tractor representative of the tractor type to be approved shall be submitted to the technical service responsible for conducting approval tests.

4. APPROVAL

4.1. If the tractor type submitted for approval pursuant to this Regulation meets the requirements of paragraph 5 below, approval of that tractor type shall be granted.

4.2. An approval number shall be assigned to each type approved. Its first two digits (at present 00 for the Regulation in its original form) shall indicate the series of amendments incorporating the most recent major technical amendments made to the Regulation at the time of issue of the approval. The same Contracting Party shall not assign the same number to another tractor type as defined in paragraph 2.3 above.

4.3. Notice of approval or of refusal or of extension or withdrawal of approval or production definitely discontinued of a tractor type pursuant to this Regulation shall be communicated to the Parties to the Agreement applying this Regulation, by means of a form conforming to the model in annex 1 to this Regulation.

4.4. To every tractor conforming to a type approved pursuant to this Regulation there shall be affixed, conspicuously and in a readily accessible place specified on the approval form, an international approval mark consisting of:

4.4.1. a circle surrounding the letter 'E' followed by the distinguishing number of the country which has granted approval ([1]);

4.4.2. the number of this Regulation, followed by the letter 'R', a dash and the approval number to the right of the circle described in paragraph 4.4.1.

([1]) One for the Federal Republic of Germany, 2 for France, 3 for Italy, 4 for the Netherlands, 5 for Sweden, 6 for Belgium, 7 for Hungary, 8 for Czechoslovakia, 9 for Spain, 10 for Yugoslavia, 11 for the United Kingdom, 12 for Austria, 13 for Luxembourg, 14 for Switzerland, 15 for the German Democratic Republic, 16 for Norway, 17 for Finland, 18 for Denmark, 19 for Romania, 20 for Poland, 21 for Portugal and 22 for the Union of Soviet Socialist Republics. Subsequent numbers shall be assigned to other countries in the chronological order in which they ratify or accede to the Agreement concerning the Adoption of Uniform Conditions of Approval and Reciprocal Recognition of Approval for Motor Vehicle Equipment and Parts, and the numbers thus assigned shall be communicated by the Secretary-General of the United Nations to the Contracting Parties to the Agreement.

4.5. If the tractor conforms to a tractor type approved, under one or more other Regulations annexed to the Agreement, in the country which has granted approval under this Regulation, the symbol prescribed in paragraph 4.4.1 need not be repeated; in such a case the Regulation and approval numbers and the additional symbols of all the Regulations under which approval has been granted in the country which has granted approval under this Regulation shall be placed in vertical columns to the right of the symbol prescribed in paragraph 4.4.1.

4.6. The approval mark shall be clearly legible and be indelible.

4.7. The approval mark shall be placed close to or on the tractor data plate affixed by the manufacturer.

4.8. Annex 2 to this Regulation gives examples of arrangements of approval marks.

5. SPECIFICATION

5.1. *General*

5.1.1. The tractor shall be so constructed and equipped that, in road traffic and when used in agriculture or forestry, the driver has an adequate field of vision in all normal conditions of road traffic and of field and forest work. The field of vision shall be deemed to be adequate when the driver can, wherever possible, see part of each front wheel and when the following requirements are met.

5.2. *Verification of field of vision*

5.2.1. Procedure for determining masking effects.

5.2.1.1. The tractor shall be placed on a horizontal surface as shown in figure 2. On a horizontal support level with the reference point, there shall be mounted two point sources of light, e.g. 2 x 150 W, 12 V, 65 mm apart and symmetrically located with respect to the reference point. The support shall be rotatable at its centre point about a vertical axis passing through the reference point. For the purpose of measuring the masking effects, the support shall be so aligned that the line joining the two light sources is perpendicular to the line joining the masking component and the reference point. The most adverse arrangement of tyre equipment shall be fitted. The silhouette (deepest shadow) overlaps projected onto the semi-circle of vision by the masking component, when the light sources are switched on simultaneously or alternately, shall be measured in accordance with paragraph 2.7 (figure 3).

5.2.1.2. Each masking effect shall not exceed 700 mm.

5.2.1.3. Masking effects due to adjacent structural components over 80/mm in width shall be so disposed that there is an interval of at least 2 200/mm — measured as a chord of the semi-circle of vision — between the centres of two masking effects.

5.2.1.4. There shall not be more than six masking effects in the semi-circle of vision as a whole, nor more than two within the area of vision referred to in paragraph 2.8.

5.2.1.5. Masking effects exceeding 700 mm but not exceeding 1 500 mm are, however, permissible if the components causing them cannot be redesigned or relocated. Outside the sector of vision, there may be on each side a total of either:

5.2.1.5.1. two such masking effects, one not exceeding 700 mm and the other not exceeding 1 500 mm, or

5.2.1.5.2. two such masking effects, neither exceeding 1 200 mm.

5.2.1.6. Any obstruction of vision caused by the presence of rear-view mirrors of an authorized model shall not be taken into consideration if such mirrors cannot be positioned differently.

5.2.2. Mathematical determination of binocular-vision masking effects.

5.2.2.1. The admissibility of various masking effects may be verified mathematically rather than through the verification procedure referred to in paragraph 5.2.1. The extent, distribution and number of masking effects shall be governed by paragraphs 5.2.1.3 to 5.2.1.6.

5.2.2.2. On the basis of a binocular vision and a distance between the eyes of 65 mm, the masking effect expressed in mm can be calculated by the formula

$$x = \frac{b - 65}{a} \times 12\,000 + 65$$

where

a = the distance in mm between the component obscuring vision and the reference point, measured along the line of vision joining the reference point, the centre of the component and the perimeter of the semi-circle of vision;

b = the width in mm of the component obscuring vision, measured horizontally and perpendicularly to the line of vision.

5.3. The verification procedures referred to in paragraph 5.2 may be replaced by other procedures, provided that the latter can be shown to be equally valid.

5.4. *Masking effect of the windscreen frame*

In determining the masking effects in the sector of vision, the masking effect caused by the windscreen frame and the masking effect caused by another obstruction may, for the purposes of paragraph 5.2.1.4 be considered as a single masking effect, provided the distance between the outermost points of such masking effects does not exceed 700 mm.

5.5. *Windscreen wiper*

5.5.1. If the tractor is equipped with a windscreen, it shall also be equipped with one or more power-driven windscreen wipers. Their operating area shall be such as to ensure a clear forward view corresponding to one chord of the semi-circle measuring not less than 8 m, within the area of vision.

5.5.2. Windscreen wipers shall operate with not less than 20 wiping cycles per minute.

6. MODIFICATIONS OF THE TRACTOR TYPE AND EXTENSION OF APPROVAL

6.1. Every modification of the tractor type shall be notified to the administrative department, which approved the tractor type. The department may then either:

6.1.1. Consider that the modifications made are unlikely to have an appreciable adverse effect and that in any case the tractor still complies with the requirements; or

6.1.2. Require a further test report from the technical service responsible for conducting the tests.

6.2. Confirmation or refusal of approval, specifying the alterations, shall be communicated by the procedure specified in paragraph 4.3 above to the Parties to the Agreement who apply this Regulation.

6.3. The competent authority issuing the extension of approval shall assign a series number to each communication form drawn up for such an extension.

7. CONFORMITY OF PRODUCTION

7.1. Every tractor bearing an approval mark as prescribed by this Regulation shall conform to the tractor type approved and satisfy the requirements of paragraph 5 above.

7.2. In order to verify conformity as prescribed in paragraph 7.1 above, a sufficient number of random checks shall be made on serially-manufactured tractors bearing the approval mark required under this Regulation.

8. PENALTIES FOR NON-CONFORMITY OF PRODUCTION

8.1. The approval granted in respect of a tractor type pursuant to this Regulation may be withdrawn if the requirements laid down in paragraph 7.1 are not complied with or if the tractor fails to pass the checks prescribed in paragraph 7 above.

8.2. If a Party to the Agreement which applies this Regulation withdraws an approval it has previously granted, it shall forthwith so notify the other Contracting Parties applying this Regulation, by means of a copy of the approval form bearing at the end, in large letters, the signed and dated annotation 'APPROVAL WITHDRAWN'.

9. PRODUCTION DEFINITELY DISCONTINUED

If the holder of the approval completely ceases to manufacture a tractor type approved in accordance with this Regulation, he shall so inform the authority which granted the approval. Upon receiving the relevant communication that authority shall inform thereof the other Parties to the Agreement applying this Regulation by means of a copy of the approval form bearing at the end, in large letters, the signed and dated annotation 'PRODUCTION DISCONTINUED'.

10. NAMES AND ADDRESSES OF TECHNICAL SERVICES RESPONSIBLE FOR CONDUCTING APPROVAL TESTS, AND OF ADMINISTRATIVE DEPARTMENTS

The Parties to the Agreement applying this Regulation shall communicate to the United Nations Secretariat the names and addresses of the technical services responsible for conducting approval tests and of the administrative departments which grant approval and to which forms certifying approval or refusal or extension or withdrawal of approval, issued in other countries, are to be sent.

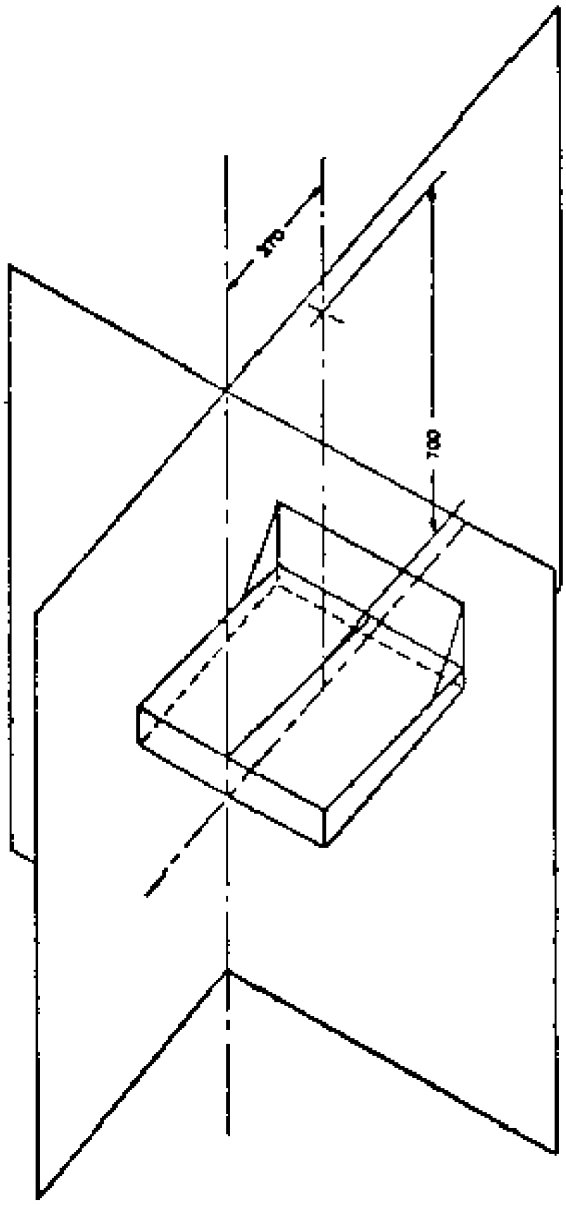

Figure 1

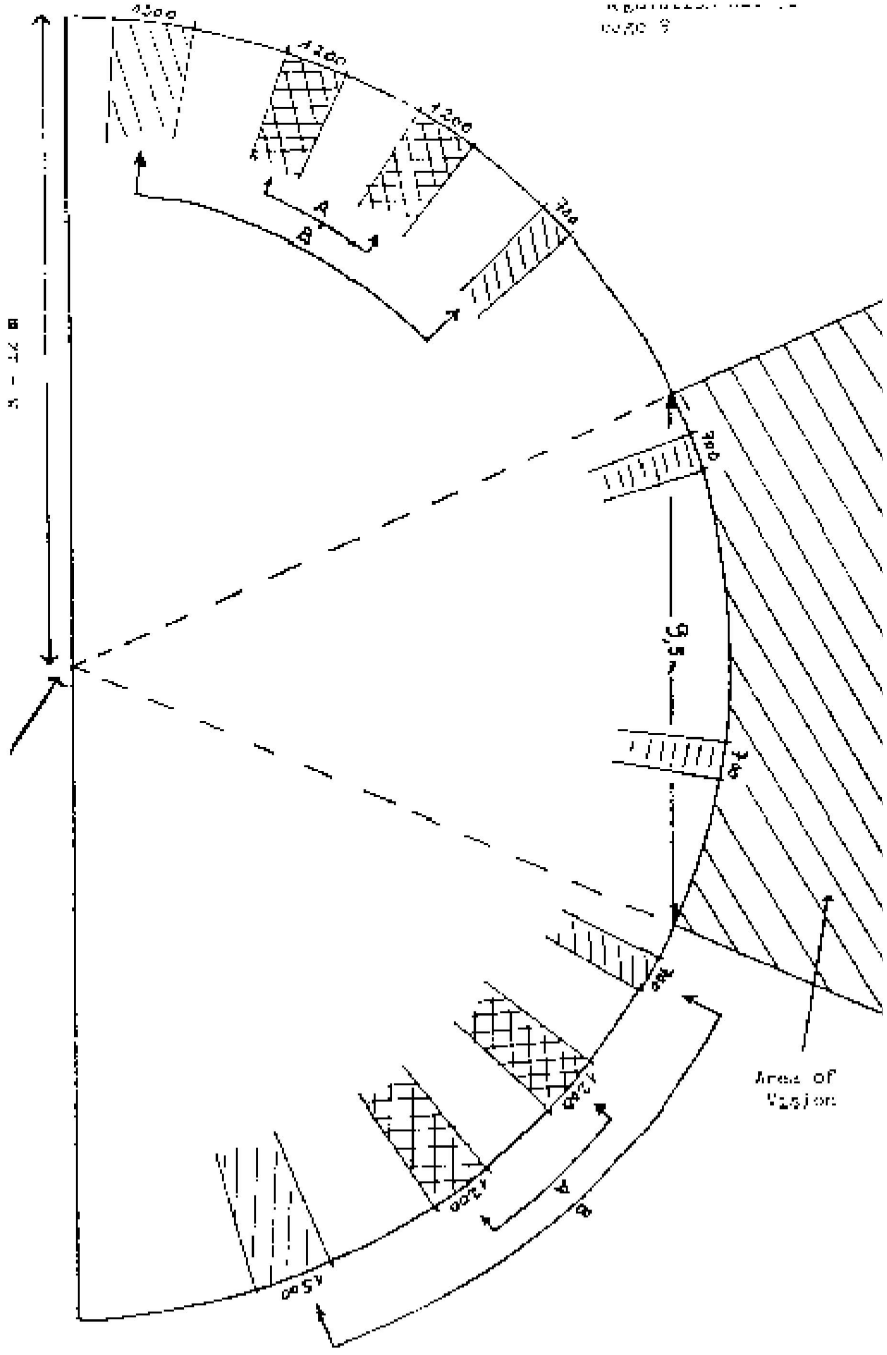

Figure 2

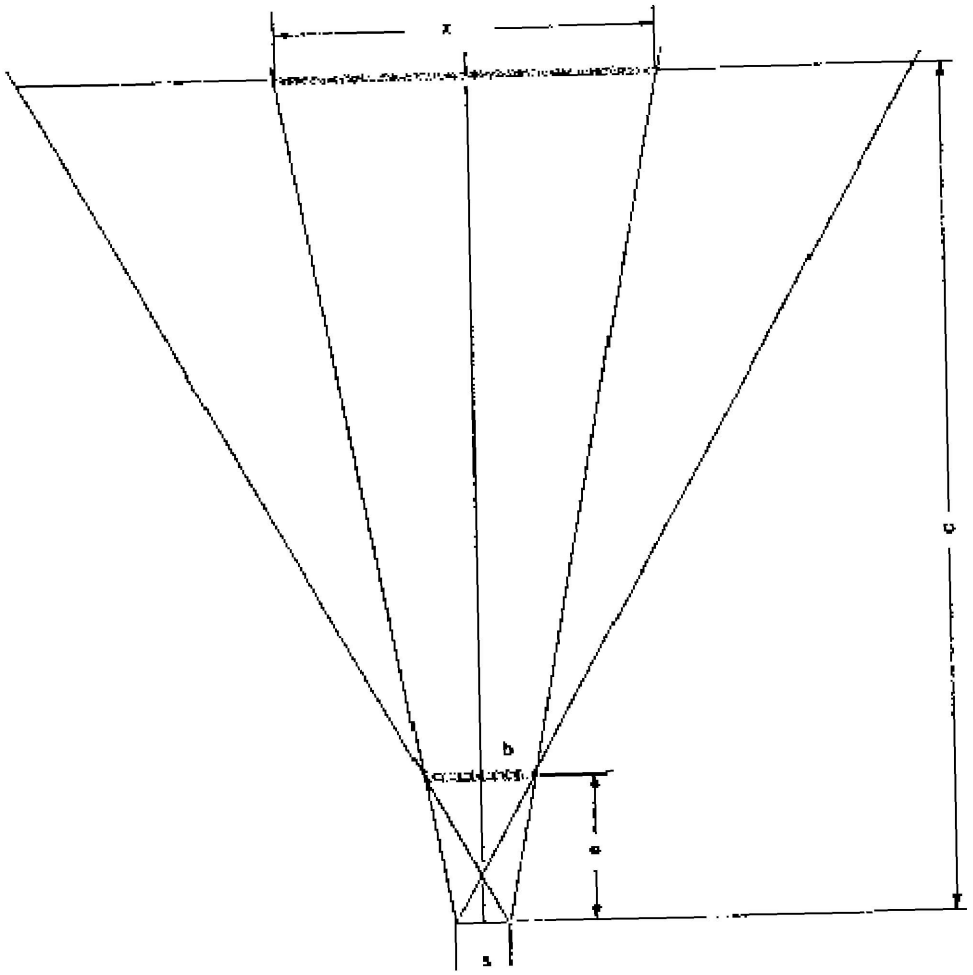

$$\frac{\frac{x}{2} - \frac{s}{2}}{c} = \frac{\frac{b}{2} - \frac{s}{2}}{a}$$

$$x = \frac{b - 65}{a} \times 12\,000 + 65$$

Figure 3

ANNEX 1

(Maximum format: A4 (210 × 297 mm))

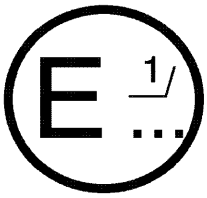

([1]) .....

.....

.....

Communication concerning:

— approval

— refusal of approval

— extension of approval

— withdrawal of approval

— production definitely discontinued ([2])

of a tractor type with regard to the driver's field of vision, pursuant to Regulation No 71

Approval No ..... Extension No .....

1. Trade name or mark of tractor: .....
2. Tractor type: .....
3. Manufacturer's name and address: .....
4. If applicable, name and address of manufacturer's representative: .....
5. Brief description of tractor: .....
6. The most adverse arrangement of tyre equipment for forward vision (front, rear): .....
7. Tractor submitted for approval on: .....
8. Technical service responsible for conducting approval tests: .....
9. Date of report issued by that service: .....
10. Number of report issued by that service: .....
11. Approval granted/refused/extended/withdrawn ([2])
12. Reason(s) of extension (if applicable): .....
13. Site of approval mark on tractor: .....
14. Place: .....
15. Date: .....
16. Signature: .....
17. The following documents, bearing the approval number shown above, are annexed to this communication:
    - dimensioned drawings;
    - exploded view or photograph of the passenger compartment.

([1]) Name of administration.

([2]) Strike out what does not apply.

ANNEX 2

ARRANGEMENTS OF APPROVAL MARKS

Model A

(see paragraph 4.4 of this Regulation)

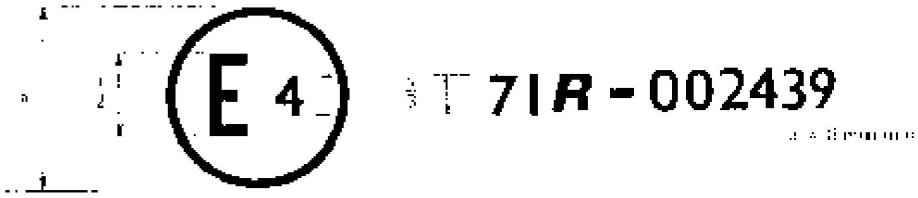

The above approval mark affixed to a tractor shows that the tractor type concerned has, with regard to the driver's field of vision, been approved in the Netherlands (E 4) pursuant to Regulation No 71 under the approval number 002439. The first two digits of the approval number indicate that the approval was granted in accordance with the requirements of Regulation No 71 in its original form.

Model B

(see paragraph 4.5 of this Regulation)

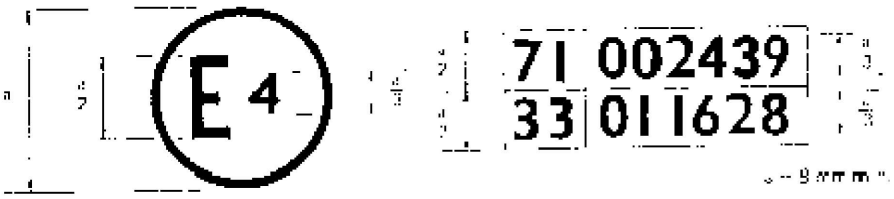

The above approval mark affixed to a tractor shows that the tractor type concerned has been approved in the Netherlands (E 4) pursuant to Regulations Nos 71 and 33 [1]. The first two digits of the approval numbers indicate that, at the dates when the respective approvals were granted, Regulation No 71 had not been modified, and Regulation No 33 already included the 01 series of amendments.

[1] The latter number is given as an example only.